MPA201

0.5 Watts, 12.5 Volts, Class A
Linear to 500MHz
Hybrid Amplifier

GENERAL DESCRIPTION

The **MPA201** is a common emitter amplifier device designed for broadband performance to 500MHz in a format suitable for microstrip assembly and high reliability applications. Its wide dynamic rage and flexibility make it suitable for a broad spectrum of instrumentation, receiver, and transmitter applications. It utilizes gold metalization and diffused ballasting to provide high reliability and supreme ruggedness.

CASE OUTLINE
55AU, Style 2

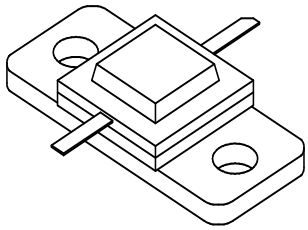

ABSOLUTE MAXIMUM RATINGS

Maximum Power Dissipation @ 25°C		6.0 Watts
BV_{CES}	Collector to Emitter Voltage	40 Volts
BV_{EBO}	Emitter to Base Voltage	3.5 Volts
I_C	Collector Current	300 mA
Storage Temperature		-55 to +150 °C
Operating Junction Temperature		+200 °C

FUNCTIONAL CHARACTERISTICS @ 25°C

SYMBOL	CHARACTERISTICS	TEST CONDITIONS	MIN	TYP	MAX	UNITS
P_{OUT}	Power Out	F = 500 MHz V_{CE} = 12.5V I_C = 140mA	0.5	-	-	W
P_{IN}	Power Input		-	-	0.032	W
G_P	Power Gain		12	13	-	dB
F_T	Transition Frequency		2.0			GHz
VSWR	Load Mismatch Tolerance		-	-	30:1	-
I_{CQ}	Quiescent Collector Current	V_{CE} = 12.5V		140		mA
θjc^1	Junction-Case Thermal Resistance				33	°C/W

NOTES: 1. At rated output power with MSC fixture.
Rev. A: May. 2010

Microsemi reserves the right to change, without notice, the specifications and information contained herein.
Visit our web site at www.microsemi.com or contact our factory direct.

ELECTRICAL CHARACTERISTICS OF SINGLE DIE[2] @ 25°C

SYMBOL	CHARACTERISTICS	TEST CONDITIONS	MIN	TYP	MAX	UNITS
BV_{EBO}	Emitter to Base Breakdown	I_E = 1 mA	3.5	-	-	V
BV_{CES}	Collector to Emitter Breakdown	I_C = 10 mA	50	-	-	V
BV_{CEO}	Collector to Emitter Breakdown	I_C = 10 mA	22	-	-	V
h_{FE}	DC – Current Gain	I_C = 100 mA, V_{CE} = 5 V	20	-	-	-
C_{OB}	Output Capacitance	F = 1MHz, V_{CB} = 28V	-	2.0	3.0	pF

NOTES: 2. Electrical characteristics are valid only with the single die inside of MPA201, the final unit is not capable of being tested.

Internal Schematic of MPA201

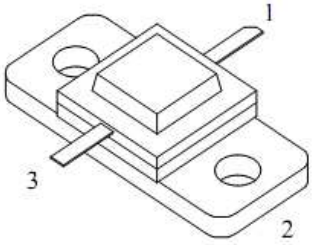

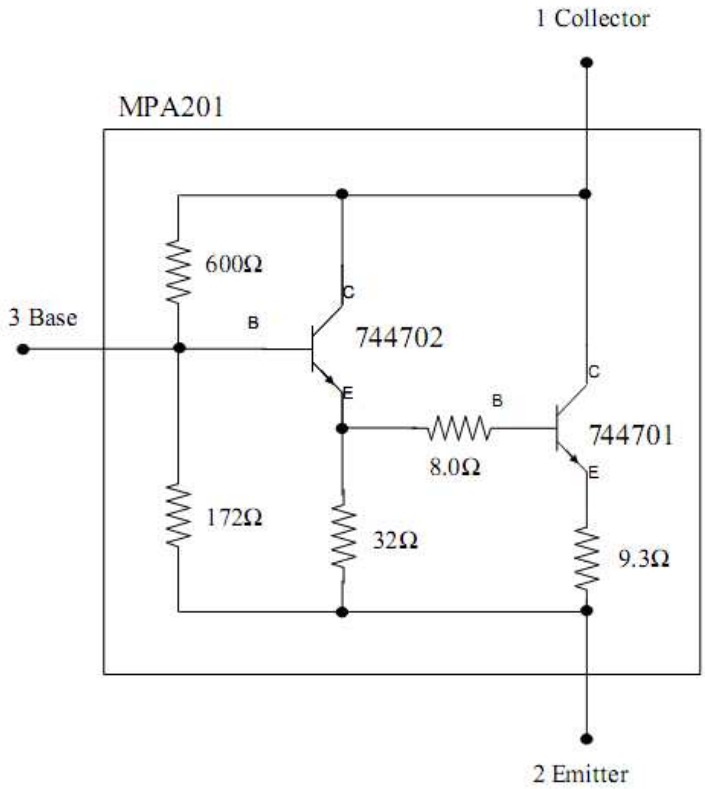

Microsemi reserves the right to change, without notice, the specifications and information contained herein.
Visit our web site at www.microsemi.com or contact our factory direct.

MPA201 Test Circuit Layout @ 500MHz

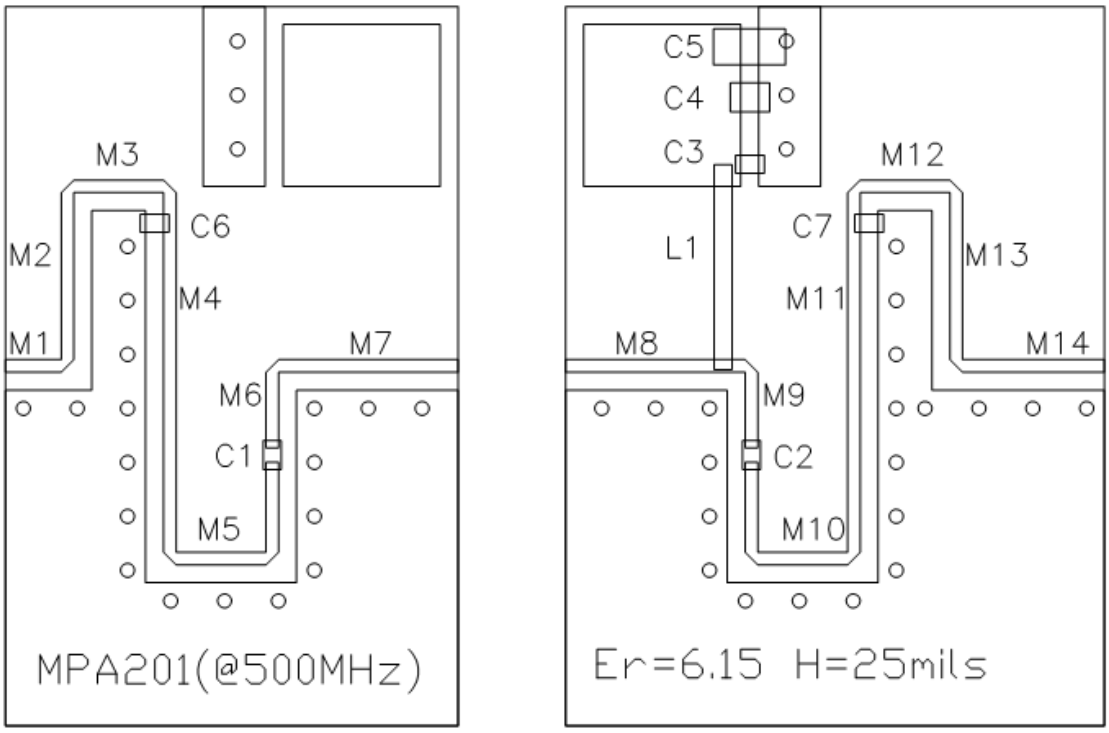

MPA201 Test Circuit Component Designations and Values @ 500MHz

Part	Description	Part	Description
C1, C2, C3	100pF Chip Capacitor (ATC 600F)	C4	10000pF Chip Capacitor (ATC 200B)
C5	47uF 63V Electrolytic Capacitor	C6, C7	5.6pF Chip Capacitor (ATC 600F)
L1	18AWG, 10Turns, Dia: 0.5″	PCB	RT6006, ε_r=6.15, 25mils, 1oz
M1	35 x 155 mils (W x L)	M2	35 x 465 mils (W x L)
M3	35 x 250 mils (W x L)	M4	35 x 1000 mils (W x L)
M5	35 x 250 mils (W x L)	M6	35 x 500 mils (W x L)
M7	35 x 500 mils (W x L)	M8	35 x 500 mils (W x L)
M9	35 x 500 mils (W x L)	M10	35 x 250 mils (W x L)
M11	35 x 1000 mils (W x L)	M12	35 x 250 mils (W x L)
M13	35 x 465 mils (W x L)	M14	35 x 395 mils (W x L)

Microsemi reserves the right to change, without notice, the specifications and information contained herein.
Visit our web site at www.microsemi.com or contact our factory direct.

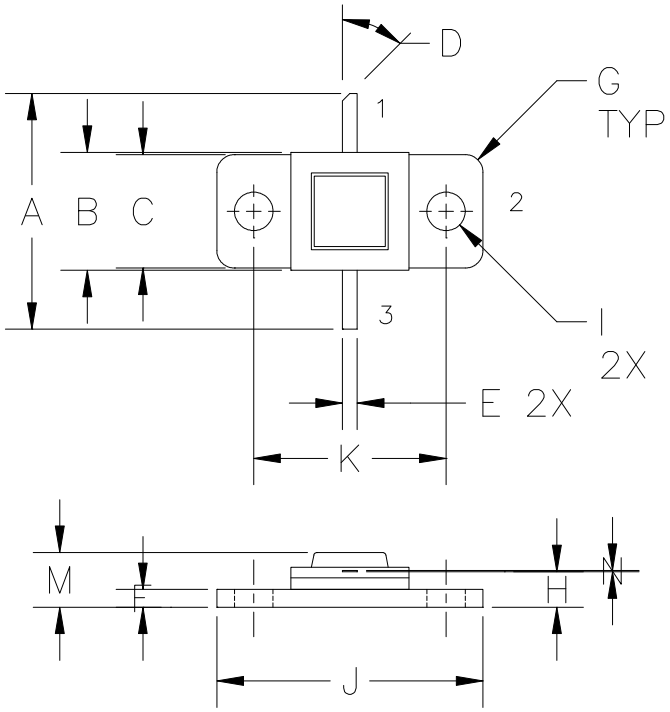

DIM	MILLIMETER	±TOL	INCHES	±TOL
A	20.32	.76	.800	.030
B	10.16	.13	.400	.005
C	9.78	.13	.385	.005
D	45°	5°	45°	5°
E	1.27	.13	.050	.005
F	1.52	.13	.060	.005
G	1.52R	.13	.060R	.005
H	3.05	.13	.120	.005
I	3.30 DIA	.13	.130 DIA	.005
J	22.86	.13	.900	.005
K	16.51	.13	.650	.005
M	4.70	REF	.185	REF
N	0.13	.02	.005	.001

STYLE 1:
PIN1 = COLLECTOR
2 = BASE
3 = EMITTER

STYLE 2:
PIN1 = COLLECTOR
2 = EMITTER
3 = BASE

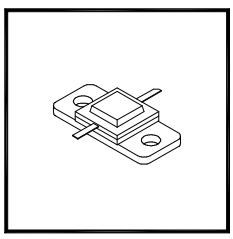

DWG NO.
55AU

Microsemi reserves the right to change, without notice, the specifications and information contained herein.
Visit our web site at www.microsemi.com or contact our factory direct.