Online data sheet



MPA-107THTP0B01

MPA

POSITION SENSORS

SICK
Sensor Intelligence.



Ordering information

Type	Part no.
MPA-107THTP0B01	1067049

Other models and accessories → www.sick.com/MPA

Detailed technical data

Features

Cylinder types with adapter	Round body cylinder Tie rod cylinder T-slot cylinders Festo cylinders DSBC SMC cylinders CP96
Measuring range	107 mm [1]
Housing length	109 mm
Output function	Analog, IO-Link
Electrical wiring	DC 4-wire
Analog output (voltage)	0 V ... 10 V
Analog output (current)	4 mA ... 20 mA
Teach-in	✓
Enclosure rating	IP65, IP67, IP68 [2]
IO-Link functions	Standard functions, advanced functions
IO-Link advanced functions	Timers, timestamp

[1], ± 1 mm.
[2] According to EN 60529.

Mechanics/electronics

Supply voltage	15 V DC ... 30 V DC [1]
Power consumption	≤ 35 mA [2]
Max. load resistance	≤ 500 Ω [3]
Min. load resistance	≥ 2 kΩ [4]
Protection class	III
Required magnetic field sensitivity, typ.	2 mT
Resolution, typ.	0.03 % FSR (max. ≥ 0.06 mm) [5]
Linearity error, typ.	0.5 mm [6]
Repeat accuracy, typ.	0.06 % FSR (≥ 0.1 mm) [7]
Sampling rate, typ.	1.15 ms [8]
IO-Link	✓
Status indicator LED	✓
Reverse polarity protection	✓
Short-circuit protection	✓
Ambient operating temperature	–20 °C ... +70 °C
Shock and vibration resistance	30 g, 11 ms/10 Hz ... 55 Hz, 1 mm
EMC	According to EN 60947-5-2 [9]
Housing material	Metal, Aluminum, Plastic
Connection type	Cable with M8 male connector, 4-pin, 0.3 m [10]
Cable material	PUR
Conductor cross-section	0.08 mm²
UL File No.	NRKH.E181493

[1] Reverse-polarity protected, operation in short-circuit protected network: max. 8 A.
[2] Without load.
[3] Power Output, at 24 V.
[4] Voltage output.
[5] FSR: Full Scale Range; max. measuring range.
[6] At 25 ° C, linearity error (maximum deviation) depending on response curve and minimal deviation function.
[7] At 25 ° C, repeatability magnet movement in one direction.
[8] Only in standard mode, not in IO-Link mode.
[9] The analog measured value can deviate under transient conditions.
[10] Do not bend below 0 °C.

Classifications

ECl@ss 5.0	27270104
ECl@ss 5.1.4	27270104
ECl@ss 6.0	27270104
ECl@ss 6.2	27270104
ECl@ss 7.0	27270104
ECl@ss 8.0	27270104
ECl@ss 8.1	27270104
ECl@ss 9.0	27270104

ETIM 5.0	EC002544
ETIM 6.0	EC002544
UNSPSC 16.0901	39122230

Connection diagram

Cd-355

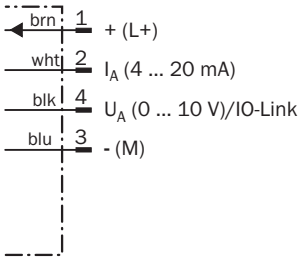

Dimensional drawing (Dimensions in mm (inch))

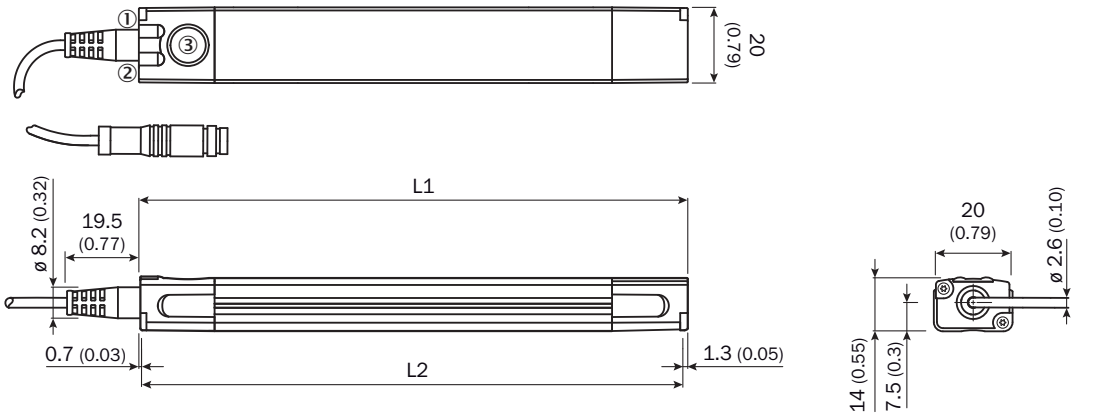

	Total length (L1) mm	Measuring range (L2) mm
MPA-107	109	107
MPA-143	145	143
MPA-179	181	179
MPA-215	217	215
MPA-251	253	251
MPA-287	289	287
MPA-323	325	323
MPA-359	361	359
MPA-395	397	395
MPA-431	433	431
MPA-467	469	467
MPA-503	505	503
MPA-539	541	539

	Total length (L1) mm	Measuring range (L2) mm
MPA-575	577	575
MPA-611	613	611
MPA-647	649	647
MPA-683	685	683
MPA-719	721	719
MPA-755	757	755
MPA-791	793	791
MPA-827	829	827
MPA-863	865	863
MPA-899	901	899
MPA-935	937	935
MPA-971	973	971
MPA-1007	1,009	1,007

① Function signal indicator 1
② Function signal indicator 2
③ Teach-Pad

Recommended accessories

Other models and accessories ➜ www.sick.com/MPA

	Brief description	Type	Part no.
Brackets for cylinder sensors			
	Sensor adapter DSBC-32, Stainless steel V2A	BEF-KHZPF032MPA	2086744
	For tie-rod cylinder (diameter tie-rod max. 18 mm), Aluminum alloy (adapter), Stainless steel V2A (mounting-/fixing screw)	BEF-KHZPZ1MPA	2065578
	For round body cylinders with diameter up to 85 mm, Stainless steel V2A	BEF-KHZR085MPA	2066626
	For round body cylinders with diameter up to 135 mm, Stainless steel V2A	BEF-KHZR135MPA	2066627
	For round body cylinders with diameter up to 210 mm, Stainless steel V2A	BEF-KHZR210MPA	2066628

	Brief description	Type	Part no.
	Sensor adapter CP96-63, Stainless steel V2A	BEF-KHZTS063MPA	2086756
	Sensor adapter CP96-80, Stainless steel V2A	BEF-KHZTS080MPA	2086757
	Sensor adapter CP96-100, Stainless steel V2A	BEF-KHZTS100MPA	2086758
	Sensor adapter CP96-125, Stainless steel V2A	BEF-KHZTS125MPA	2086759
	For T-slot cylinders, Stainless steel V2A (bracket/mounting screw), Brass (fixing screw/ sliding nut)	BEF-KHZT01MPA	2065575
Mounting brackets and plates			
	Bracket for low mounting, Stainless steel V2A (bracket/mounting screw), Brass (fixing screw)	BEF-WNL01MPA	2065973
	Bracket for lateral mounting, Stainless steel V2A (bracket/mounting screw), Brass (fixing screw)	BEF-WNZ01MPA	2065577
Other mounting accessories			
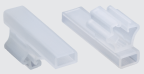	10 pieces, Label Holder, 2.5 mm to 3.5 mm, 10 pcs., TPU	LABEL HOLDER	2086019
Plug connectors and cables			
	Head A: female connector, M8, 4-pin, straight Head B: cable Cable: drag chain use, PUR, halogen-free, unshielded, 2 m	DOL-0804-G02MC	6025894
	Head A: female connector, M8, 4-pin, straight Head B: cable Cable: drag chain use, PUR, halogen-free, unshielded, 5 m	DOL-0804-G05MC	6025895
	Head A: female connector, M8, 4-pin, angled Head B: cable Cable: drag chain use, PUR, halogen-free, unshielded, 2 m	DOL-0804-W02MC	6025897
	Head A: female connector, M8, 4-pin, angled Head B: cable Cable: drag chain use, PUR, halogen-free, unshielded, 5 m	DOL-0804-W05MC	6025898
	Head A: female connector, M8, 4-pin, straight Head B: - Cable: unshielded	DOS-0804-G	6009974
	Head A: female connector, M8, 4-pin, angled Head B: - Cable: unshielded	DOS-0804-W	6009975
	Head A: male connector, M8, 4-pin, straight Head B: - Cable: unshielded	STE-0804-G	6037323
Magnets			
	Magnet with mounting hole for M3 countersunk screw, Ø 15.2 mm, height 6 mm	Magnet	5327349

SICK AT A GLANCE

SICK is one of the leading manufacturers of intelligent sensors and sensor solutions for industrial applications. A unique range of products and services creates the perfect basis for controlling processes securely and efficiently, protecting individuals from accidents and preventing damage to the environment.

We have extensive experience in a wide range of industries and understand their processes and requirements. With intelligent sensors, we can deliver exactly what our customers need. In application centers in Europe, Asia and North America, system solutions are tested and optimized in accordance with customer specifications. All this makes us a reliable supplier and development partner.

Comprehensive services complete our offering: SICK LifeTime Services provide support throughout the machine life cycle and ensure safety and productivity.

For us, that is “Sensor Intelligence.”

WORLDWIDE PRESENCE:

Contacts and other locations –www.sick.com