MP4000

Offline High Brightness White LED Driver Controller

The Future of Analog IC Technology

DESCRIPTION

The MP4000 is a high efficiency step-down converter designed for driving high brightness Light Emitting Diodes (LEDs).

The MP4000 drives an external MOSFET in the floating buck converter structure. The inductor current is regulated with boundary conduction mode which features no reverse recovery loss in the freewheeling diode and soft turn on for the power MOSFET. Such operation mode can achieve very high efficiency and at the same time minimize the inductor value and size. Also, the LED current can be well regulated by controlling the MOSFET peak current, which is sensed through an external resistor. Its low 300mV feedback voltage reduces power loss and improves efficiency.

The MP4000 can accept an external PWM or a DC signal for the burst dimming control.

The MP4000 features output short protection, maximum switching frequency limit, under-voltage lockout and thermal shut down.

FEATURES

- Constant-current LED Driver
- Power MOSFET Zero-Current Turn On
- No Freewheeling Diode Reverse Recovery Issues
- High Efficiency and Reliability in Boundary Mode Operation
- Low 0.9mA Operation Current
- PWM or DC Input Burst Dimming Control
- Hiccup Short Circuit Protection
- UVLO, Thermal Shutdown
- Maximum Frequency is Limited to 110kHz
- Available in SOIC8 Package

APPLICATIONS

- DC/DC or AC/DC LED Driver applications
- General Illumination
- Industrial Lighting
- Automotive/ Decorative LED Lighting

For MPS green status, please visit MPS website under Quality Assurance. "MPS" and "The Future of Analog IC Technology" are Registered Trademarks of Monolithic Power Systems, Inc.

TYPICAL APPLICATION

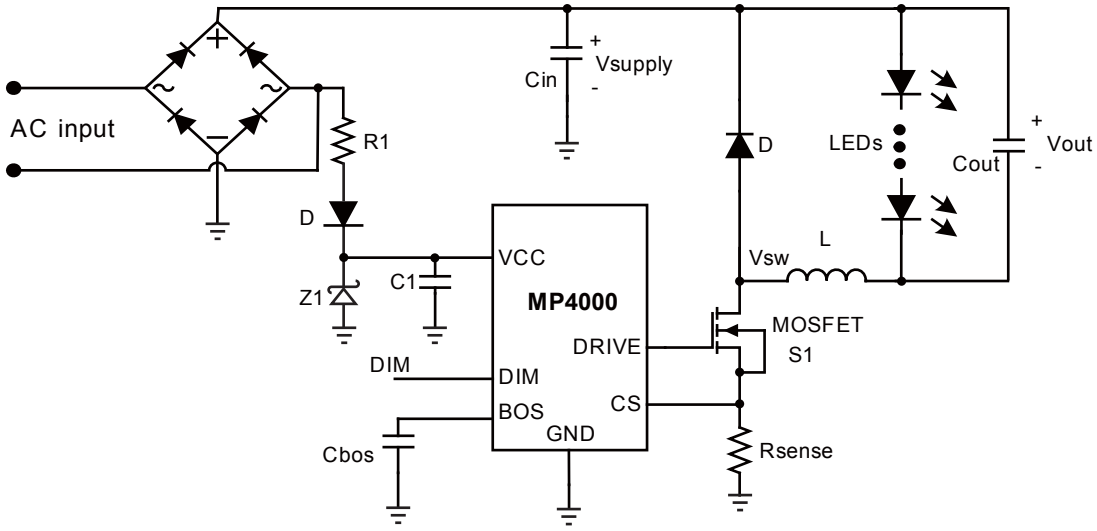

MPS Proprietary Information. Patent Protected. Unauthorized Photocopy and Duplication Prohibited.
© 2012 MPS. All Rights Reserved.

ORDERING INFORMATION

Part Number	Package	Top Marking	Free Air Temperature (T_A)
MP4000DS	SOIC8	MP4000	-40°C to +85°C

* For Tape & Reel, add suffix –Z (e.g. MP4000DS–Z).
For RoHS Compliant Packaging, add suffix –LF (e.g. MP4000DS–LF–Z)

PACKAGE REFERENCE

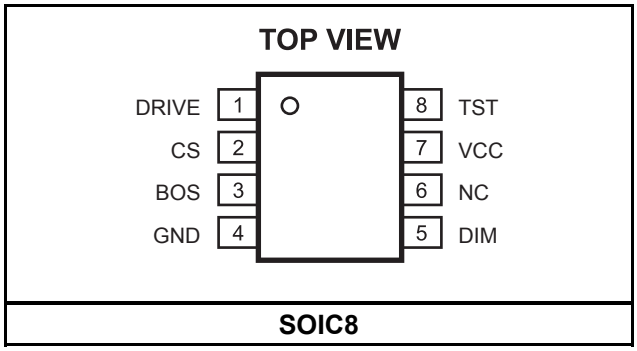

ABSOLUTE MAXIMUM RATINGS (1)

VCC, DRIVE .....-0.3V to 11V
DIM, BOS, CS.....-0.3V to 6.5V
Continuous Power Dissipation (T_A = +25°C) (2)
SOIC8 ..... 1.3W
Junction Temperature.....150°C
Lead Temperature .....260°C
Storage Temperature..... -55°C to +150°C

Recommended Operating Conditions (3)

VCC, DRIVE .....8V to 10.5V
Maximum Junction Temp. (T_J) ..... +125°C

Thermal Resistance (4)

	θ_{JA}	θ_{JC}	
SOIC8	96	45	°C/W

Notes:

1) Exceeding these ratings may damage the device.
2) The maximum allowable power dissipation is a function of the maximum junction temperature T_J (MAX), the junction-to-ambient thermal resistance θ_{JA}, and the ambient temperature T_A. The maximum allowable continuous power dissipation at any ambient temperature is calculated by P_D (MAX) = (T_J (MAX)-T_A)/θ_{JA}. Exceeding the maximum allowable power dissipation will cause excessive die temperature, and the regulator will go into thermal shutdown. Internal thermal shutdown circuitry protects the device from permanent damage.
3) The device is not guaranteed to function outside of its operating conditions.
4) Measured on JESD51-7, 4-layer PCB.

MPS Proprietary Information. Patent Protected. Unauthorized Photocopy and Duplication Prohibited.
© 2012 MPS. All Rights Reserved.

ELECTRICAL CHARACTERISTICS

V_{CC} =10V, V_{DIM}= 5V, V_{BOS}=0V, no load on pin Drive, T_A = +25°C, unless otherwise noted.

Parameters	Symbol	Condition	Min	Typ	Max	Units
Input V_{CC} Current (Quiescent)	I_{CCQS}	V_{DIM} = 0V		0.6		mA
Input V_{CC} Current (Operation)	I_{CCOP}	F_{SW}=50kHz, 100pF load on DRIVE		0.9		mA
VCC UVLO Rising	VCC_{UVLO}		7	7.4	7.8	V
VCC UVLO Hysteresis	VCC_{Hys}			1		V
DIM PWM Input High	V_{PWMH}	V_{BOS} =1.2V	1.5			V
DIM PWM Input Low	V_{PWML}	V_{BOS} =1.2V			0.9	V
DIM Pin Pull Up Current	I_{DIM}	V_{DIM}=0V		10		µA
PWM Dimming on Propagation Delay	T_{PWMon_PD}	PWM rising edge to Drive rising edge		540	750	ns
PWM Dimming off Propagation Delay	T_{PWMoff_PD}	PWM falling edge to Drive falling edge		3	4	µs
BOS Source Current	I_{BOS}	VBOS = 0V	3	4	5	µA
BOS High Threshold	V_{BOSH}	BOS pin connected to GND with a Cap	2.1	2.4	2.6	V
CS Pin Reference Voltage	V_{REF}	-40°C ≤T_A ≤+85°C	270	300	330	mV
		T_A=+25°C	285	300	315	
CS Input Bias Current	I_{CS}		-1		1	µA
Turn-off Propagation Delay	t_{off_PD}				100(5)	ns
Leading Edge Blanking Time	t_{LEB}		200	320	450	ns
Turn-on Propagation Delay	t_{on_PD}				100(5)	ns
Gate Drive Source Current	I_{DRV_Source}	V_{DRV}=0V		400(5)		mA
Gate Drive Sink Current	I_{DRV_Sink}	V_{DRV}=VCC		-1.2(5)		A
Drive Low Level Output Voltage	V_{DRVL}	I_{DRV}=10mA		50		mV
Drive High Level Output Voltage to Rail	V_{DRVH}	I_{DRV}=-10mA		110		mV
Gate Minimal Turn-on Time	t_{ON_Min}				400(5)	ns
Maximum Switching Frequency	f_{SW_Max}			110(5)		kHz
Over Temperature Protection Threshold	T_{OTP}			150		°C
Over Temperature Protection Threshold Hysteresis	T_{OTP_Hys}			30		°C
Output Short Shut Down Time	$T_{shut-down}$			1.7		ms

Notes:

5) Guarantee by design.

MPS Proprietary Information. Patent Protected. Unauthorized Photocopy and Duplication Prohibited.
© 2012 MPS. All Rights Reserved.

PIN FUNCTIONS

Pin #	Name	Description
1	DRIVE	External MOSFET drive output.
2	CS	LED current sense input. Connect the current sense resistor that programs the LED current .
3	BOS	Burst Oscillator Setting. For the DC input burst dimming, connect a capacitor from this pin to GND to program the burst dimming frequency. For the external PWM input burst dimming, connect a 300k resistor from this pin to GND and apply the logic signal to the DIM pin.
4	GND	Ground.
5	DIM	Burst Dimming Control Input. For DC input control, the voltage range of 0V to 2.4V at DIM pin linearly sets the burst-mode duty cycle from minimum to 100%. For external PWM input control, connect the PWM signal to DIM pin. Open DIM pin if no dimming control is applied.
6	NC	No connection. Float this pin.
7	VCC	The VCC voltage provides the power for IC logic and driving external MOSFET. Must be locally bypassed.
8	TST	Test pin. Connect to GND.

MPS Proprietary Information. Patent Protected. Unauthorized Photocopy and Duplication Prohibited.
© 2012 MPS. All Rights Reserved.

TYPICAL PERFORMANCE CHARACTERISTICS

V_{CC} =10V, V_{IN} =90V_{AC} to 265V_{AC}, V_{OUT} =10V to 40V, L=680µH, T_A = +25°C, unless otherwise noted.

Efficiency vs. Input Voltage

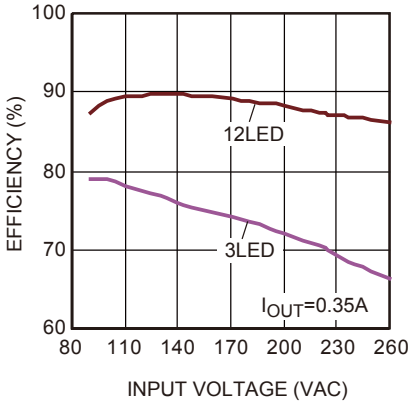

Efficiency vs. String Voltage

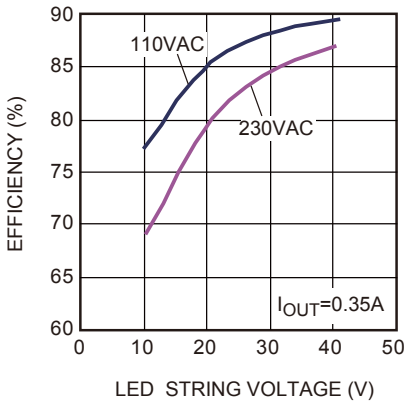

Efficiency vs. Input Line Voltage

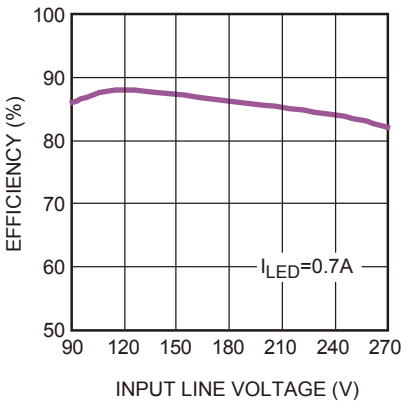

I_{LED} Regulation vs. Input Voltage

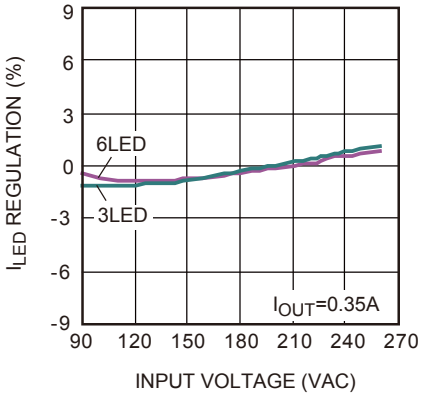

I_{LED} Regulation vs. String Voltage

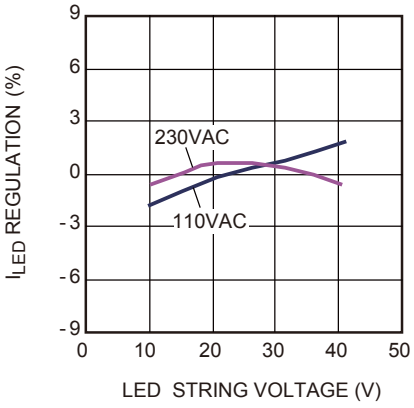

I_{LED} Regulation vs. Ambient Temp

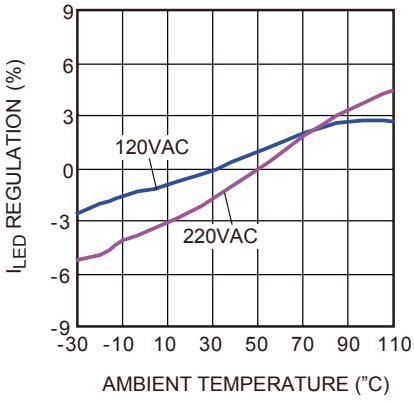

Passive PFC

I_{OUT}=350mA

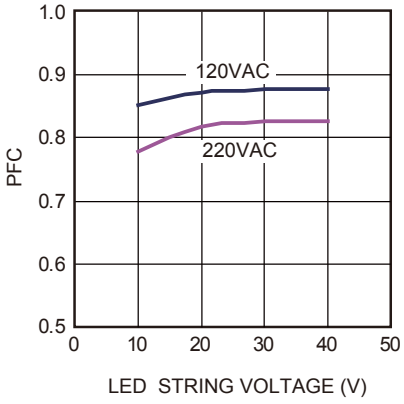

LED Current vs. PWM Dimming Duty (fpwm=100Hz)

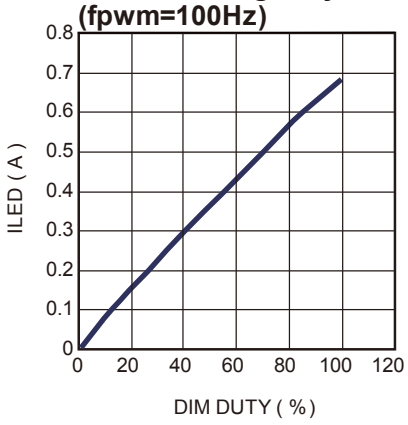

EMI

V_{IN} =120V_{AC} V_{OUT}=27V

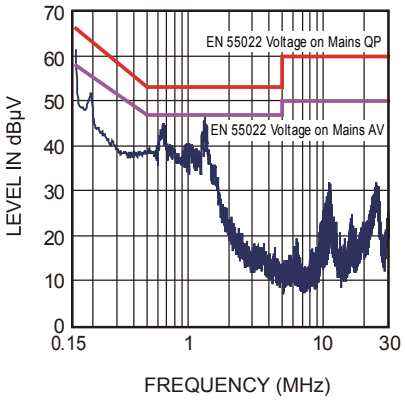

MPS Proprietary Information. Patent Protected. Unauthorized Photocopy and Duplication Prohibited.
© 2012 MPS. All Rights Reserved.

TYPICAL PERFORMANCE CHARACTERISTICS *(continued)*

V_{CC} =10V, V_{IN} =90V_{AC} to 265V_{AC}, V_{OUT} =10V to 40V, L=680µH, T_A = +25°C, unless otherwise noted.

EMI

V_{IN} =220V_{AC} V_{OUT}=27V

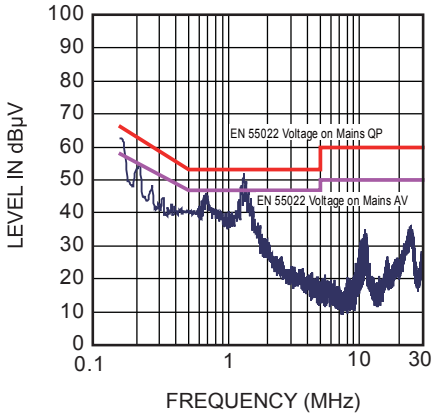

Analog Dimming

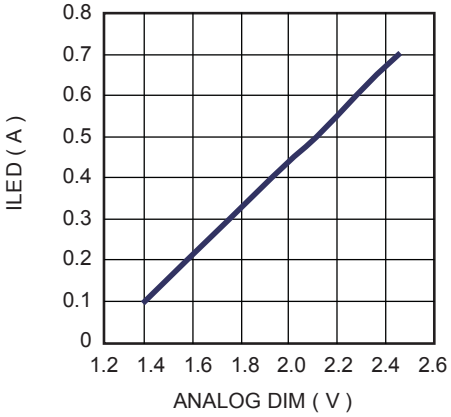

Power Ramp Up

V_{IN} =120V_{AC} V_{OUT}=33V

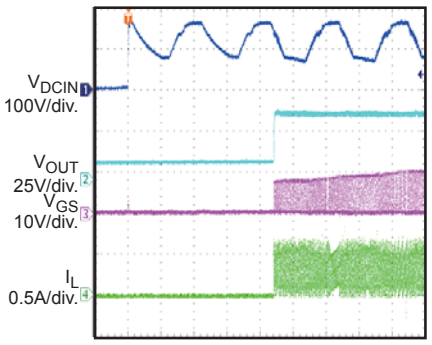

Power Ramp Down

V_{IN} =120V_{AC} V_{OUT}=33V

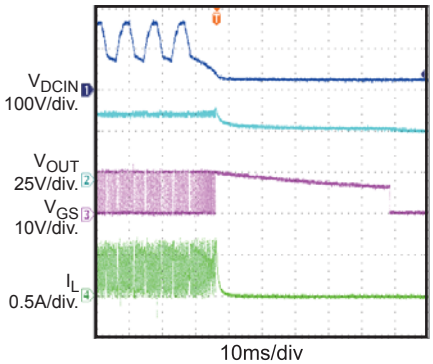

Steady State Operation

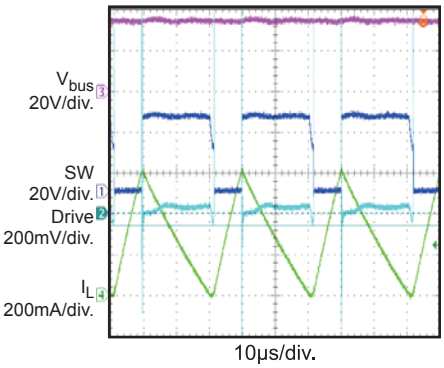

PWM Dimming

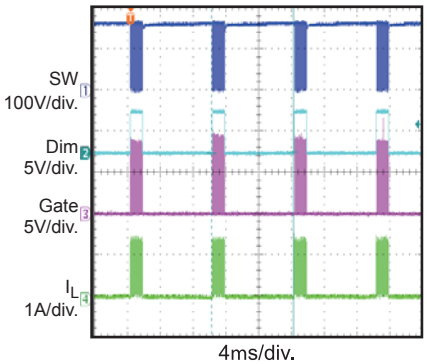

Analog Dimming

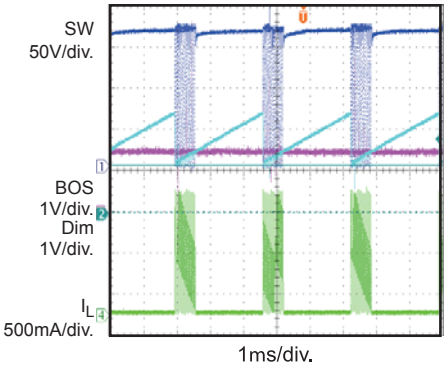

LED Short Protection

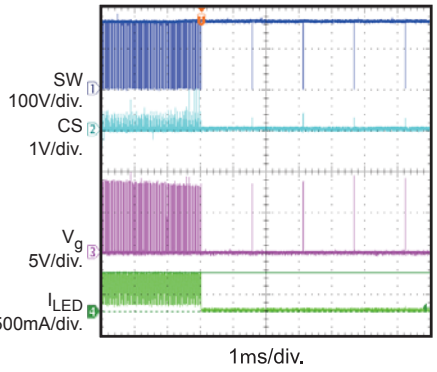

LED Open Protection

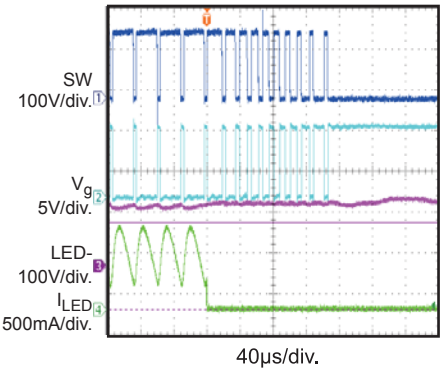

MPS Proprietary Information. Patent Protected. Unauthorized Photocopy and Duplication Prohibited.
© 2012 MPS. All Rights Reserved.

FUNCTIONAL BLOCK DIAGRAM

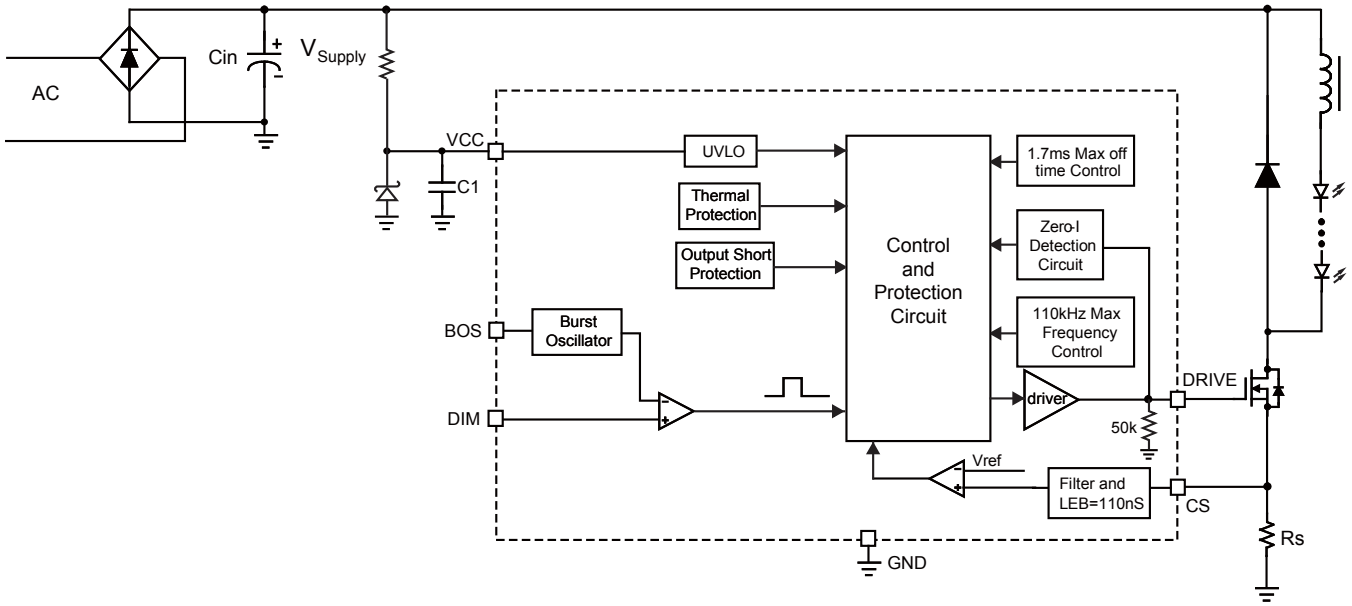

Figure 1—Function Block Diagram

MPS Proprietary Information. Patent Protected. Unauthorized Photocopy and Duplication Prohibited.
© 2012 MPS. All Rights Reserved.

OPERATION

LED Current Regulation and Zero-Current Detection

With a floating buck converter configuration, as shown in the typical application circuit, the MP4000 turns off the MOSFET S1 with a peak current control. The peak current is sensed with a resistor R_{sense} and feeds back to CS pin. The peak current is regulated as:

$$I_{L_PEAK} = \frac{V_{REF}}{R_{sense}}.$$

In normal operation, MP4000 turns on S1 when the current in the freewheeling diode goes to zero. As a result, the average LED current is well regulated as

$$I_{LED} = \frac{V_{REF}}{2 \cdot R_{sense}}.$$

The zero-current detection is realized at DRIVE pin by sensing the MOSFET drain dv/dt current through the S1's miller cap. When the freewheeling diode current goes to zero, S1 drain voltage (V_{SW}) drops from V_{SUPPLY} to (V_{SUPPLY} -V_{OUT}) and starts oscillation, which is caused by the inductor and the parasitic caps. When V_{SW} reaches the minimum value, the dv/dt current through the miller cap changes from negative to zero. At this time, the MP4000 turns on S1. As a result, the MP4000 turns on S1 when the inductor current goes to zero and S1 drain voltage is at minimum. MP4000 controls the buck converter operating in current boundary conduction mode.

A cap Cout can be used in parallel with the LED string to reduce the current ripple.

Such boundary operation mode can minimize the S1 turn-on loss and eliminate the freewheeling diode reverse recovery loss so that high switching frequency is possible to reduce passive components' size. Furthermore, the required inductance value is small, which can help further inductor size reduction.

Brightness Dimming Control

The MP4000 employs a burst dimming control scheme so that an external PWM signal can control the dimming by varying the duty cycle, or a DC signal can control the dimming by varying the DC voltage level.

For the PWM input dimming control, a 100Hz to 2kHz PWM signal is recommended to connect to the DIM pin. BOS pin is connected to GND through a 300KΩ resistor, setting about 1.2V reference for the PWM input logic signal. PWM input high will make the IC switching. PWM input low turns off the IC.

For the DC input dimming control, a voltage from 0V to 2.4V is recommended to connect to the DIM pin. 2.4V and above is for the 100% brightness. 120mV and below is for the 5% minimal brightness. A cap C_{BOS} is connected from BOS pin to GBD to program the burst frequency f_{DIM}.

$$C_{BOS} = \frac{i_{BOS}}{V_{BOSH} \cdot f_{DIM}}.$$

For applications that do not need burst dimming control, open DIM pin and short BOS pin to GND.

For some case that needs high dimming resolution, where the dimming off time would be smaller than the switching period, dimming ON signal will force the MOSFET to turn on even when the inductor current is not zero. If this condition would happen in the application, ultra fast recovery diode is recommended for the freewheeling diode.

Frequency Setting and Inductor Design

In case the zero-current detection circuit fails, which can happen in starting up with a large output cap and in output short condition, a maximum off time of about 1.7ms is applied to make sure the device is still in operation and the short current doesn't run away.

MPS Proprietary Information. Patent Protected. Unauthorized Photocopy and Duplication Prohibited.
© 2012 MPS. All Rights Reserved.

A maximum 110kHz switching frequency is set by the MP4000 to avoid extreme losses in the circuit and ensure better EMI performance. If the converter reaches the maximum frequency, it will operate in discontinuous current conduction mode. Such operation mode should be avoided since the LED current is out of regulation.

In order to design the switching frequency f_s within the 30kHz to 110kHz range, inductor design is critical.

$$L = \frac{1}{f_s \cdot 2 \cdot I_{LED}} \cdot \frac{(V_{Supply} - V_{out}) \cdot V_{out}}{V_{Supply}} ,$$

where, V_{Supply} is the input voltage of the Buck converter, V_{out} is the LED voltage.

Hiccup Output Short Protection

If the entire LED string is shorted, Vout is zero. Due to the minimum on-time limit, the inductor current will be out of regulation. The MP4000 can detect such failure and shut down for about 1.7ms, and then re-tries the operation. Such hiccup protection can not only eliminate the thermal issue due to short circuit current, but also maintain normal operation if the protection is mis-triggered.

Under-Voltage Lockout (UVLO) Protection

Under-voltage lockout (UVLO) is implemented to protect the chip from operating at insufficient supply voltage. The UVLO rising threshold is about 7.4V while its falling threshold is a consistent 6.4V.

Thermal Shut down Protection

An accurate temperature protection is implemented to prevent the chip from operating at exceedingly high temperatures. When the silicon die temperature is higher than its upper threshold, it shuts down the whole chip. When the temperature is lower than its lower threshold, the chip is enabled again.

VALLEY-FILL PFC

If power factor >0.7 is required for the application. Valley-fill circuit is a simple choice to improve the power factor.

The valley-fill circuit is shown in the Figure 2. When the input voltage is higher than the half of the peak voltage, power is delivered directly through the diode bridge. Meanwhile C4 and C3 is charged in series through D2 as shown in the equivalent circuit (Fig3).

The peak voltage of the valley-fill capacitor is:

$$V_{VF-CAP} = 0.5V_{AC-RMS}\sqrt{2}$$

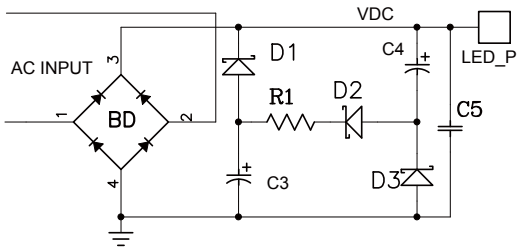

Figure—2 valley-fill circuit.

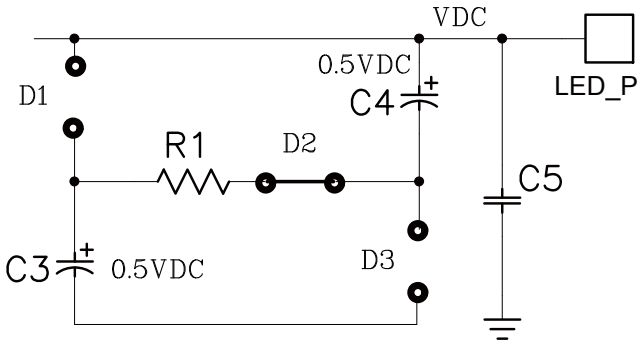

Figure—3 equivalent circuit: valley-fill charging period

As the AC line decreases from its peak value every cycle, there will be a point where the voltage magnitude of the AC line is equal to the voltage that each capacitor is charged. At this point diode D5 becomes reversed biased, and the capacitors C4 and C3 are in parallel and are discharging by the load. The equivalent circuit is shown in figure 4.

MPS Proprietary Information. Patent Protected. Unauthorized Photocopy and Duplication Prohibited.
© 2012 MPS. All Rights Reserved.

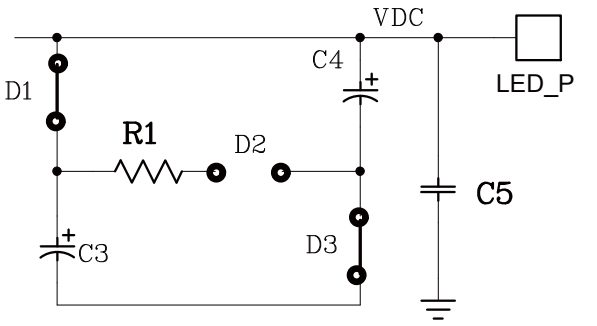

Figure—4 Valley Fill Circuit when AC Line is Low

Through the valley-fill operation, the circuit extends the conduction angle thus improves the power factor. The resistor R1 is a current limit resistor. Figure 5 shows the result of the valley-fill PFC.

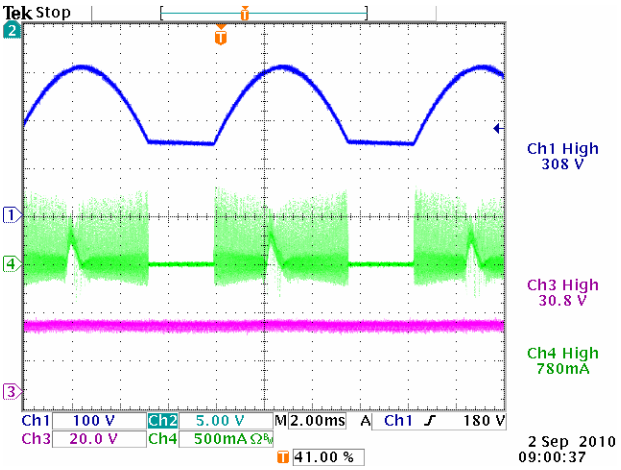

Figure—5 Valley Fill Waveform

MPS Proprietary Information. Patent Protected. Unauthorized Photocopy and Duplication Prohibited.
© 2012 MPS. All Rights Reserved.

REFERENCE DESIGN

Description

Residential downlighting is transiting to more efficient sources of light. LED light will become the trend in the near future. This reference design is a 3~12W LED driver specifically for residential downlighting and LED bulb replacement. It utilizes the MP4000: a high efficiency, accurate current regulation LED lighting driver controller.

Design Specification

V_{IN}: 90VAC to 265VAC
V_{OUT}: 10V to 40V
I_{OUT}: 350mA
PFC: >0.7
EMI: Meet EN55022 and PAR-22 Class B standards

Key Features

-Accurate current regulation
-High efficiency
-Compact size
-Low cost

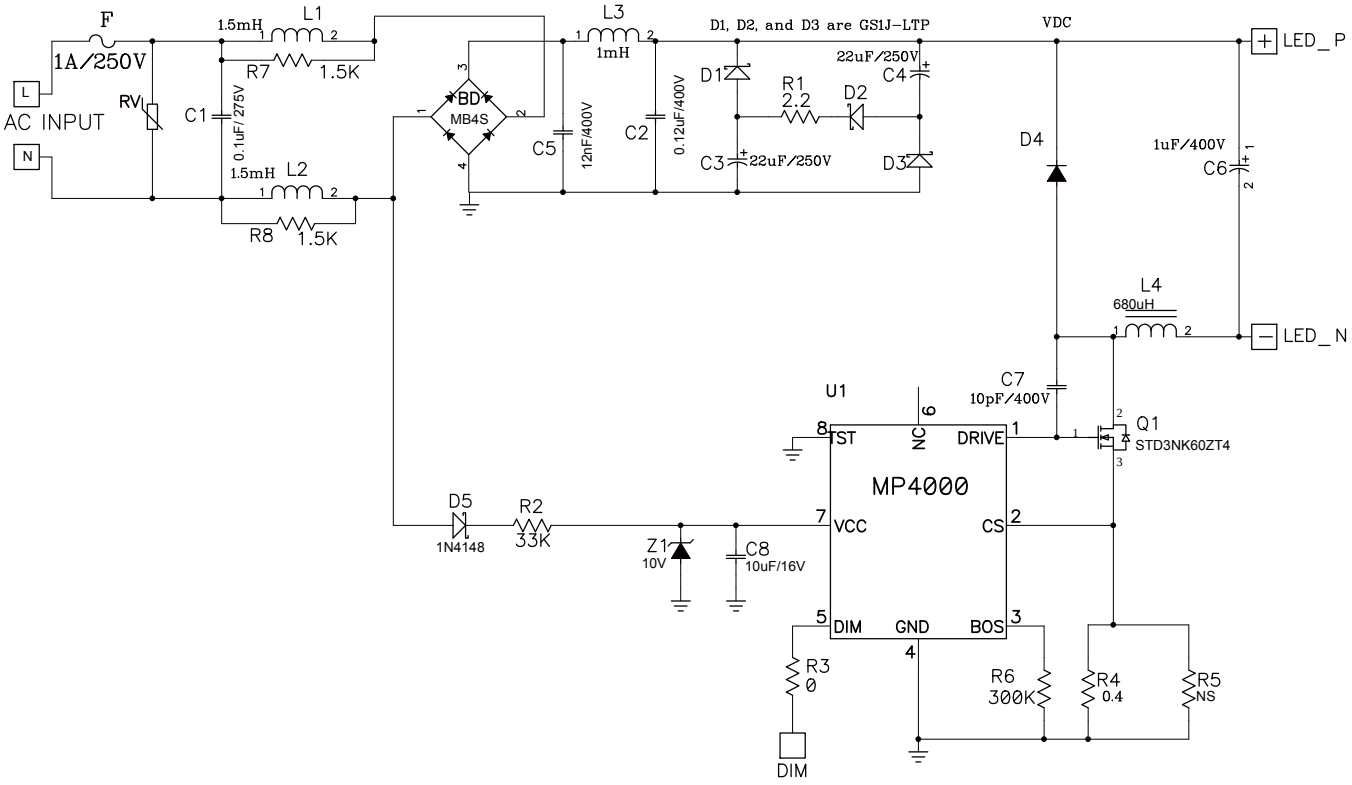

Figure—6 Reference Design Circuit: Universal Input, 3~12W LED Lighting Solution

MPS Proprietary Information. Patent Protected. Unauthorized Photocopy and Duplication Prohibited.
© 2012 MPS. All Rights Reserved.

PACKAGE INFORMATION

SOIC8

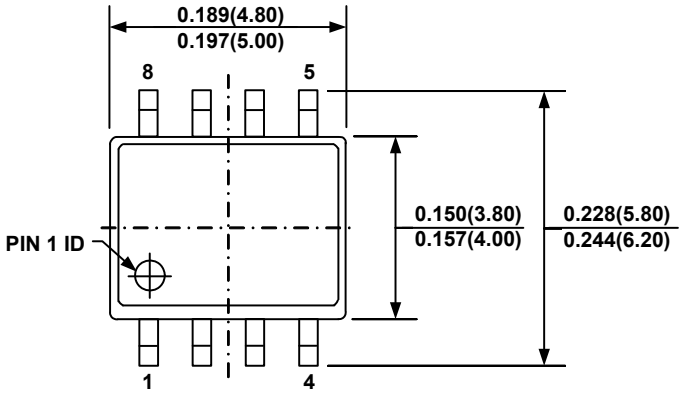

TOP VIEW

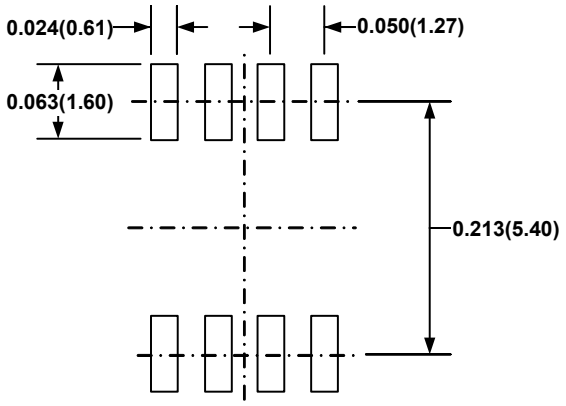

RECOMMENDED LAND PATTERN

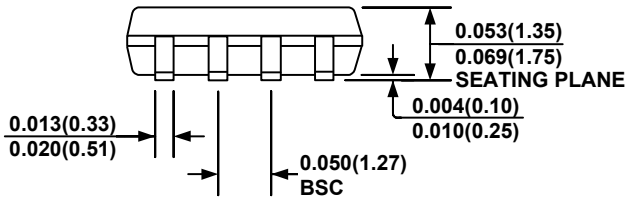

FRONT VIEW

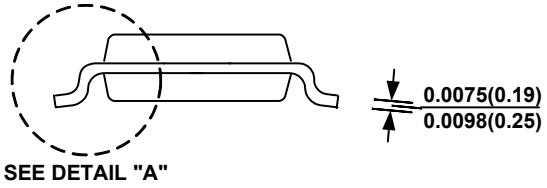

SIDE VIEW

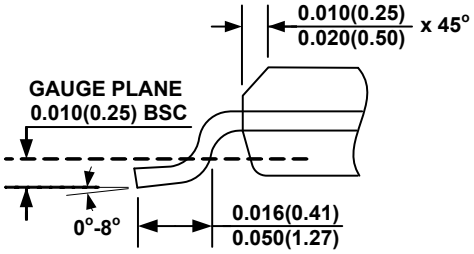

DETAIL "A"

NOTE:

1) CONTROL DIMENSION IS IN INCHES. DIMENSION IN BRACKET IS IN MILLIMETERS.
2) PACKAGE LENGTH DOES NOT INCLUDE MOLD FLASH, PROTRUSIONS OR GATE BURRS.
3) PACKAGE WIDTH DOES NOT INCLUDE INTERLEAD FLASH OR PROTRUSIONS.
4) LEAD COPLANARITY (BOTTOM OF LEADS AFTER FORMING) SHALL BE 0.004" INCHES MAX.
5) DRAWING CONFORMS TO JEDEC MS-012, VARIATION AA.
6) DRAWING IS NOT TO SCALE.

NOTICE: The information in this document is subject to change without notice. Users should warrant and guarantee that third party Intellectual Property rights are not infringed upon when integrating MPS products into any application. MPS will not assume any legal responsibility for any said applications.

MPS Proprietary Information. Patent Protected. Unauthorized Photocopy and Duplication Prohibited.
© 2012 MPS. All Rights Reserved.