MP3370

Single String, 38V Vout Boost LED Driver with Current Source

DESCRIPTION

The MP3370 is a fixed-frequency boost converter with current source. It is ideal for medium-to-high current boost LED driver applications.

The MP3370 regulates the output voltage up to 38V to drive more LEDs with an integrated 100mΩ/50V low-side MOSFET. The peak current-mode regulation and external compensation components allow the MP3370 control loop to be optimized over a wide variety of input voltage, output voltage, and load current applications. The internal soft-start, cycle-by-cycle current limiting and input under voltage lockout prevent overstressing or damage to sensitive external circuitry at start-up and fault conditions.

The MP3370 supports PWM dimming and analog dimming for flexible dimming applications.

The MP3370 is available in the thermally enhanced SOIC8-EP package with exposed pad.

FEATURES

- Input Range of 3.5V to 36V
- More than 3A Peak Current Limit
- Internal 100mΩ 50V Power Switch
- Analog/PWM Dimming
- High Efficiency
- Under-Voltage Lockout Protection
- LED Open/Short Protection
- Inductor/Diode Short Protection
- 43.5V Over-Voltage Protection
- Soft-Start Operation
- Thermal Shutdown
- SOIC8-EP Package

APPLICATIONS

- Middle Size LCD Backlighting
- General Lighting

All MPS parts are lead-free, halogen-free, and adhere to the RoHS directive. For MPS green status, please visit the MPS website under Quality Assurance. "MPS", the MPS logo, and "Simple, Easy Solutions" are trademarks of Monolithic Power Systems, Inc. or its subsidiaries.

TYPICAL APPLICATION

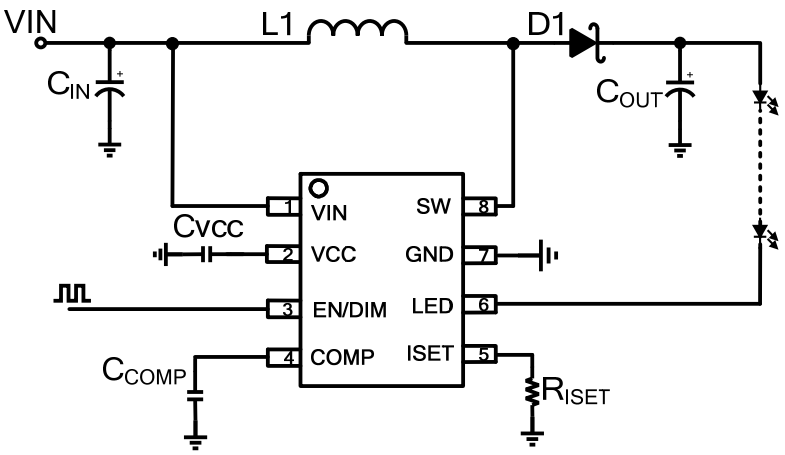

MPS Proprietary Information. Patent Protected Unauthorized Photocopy and Duplication Prohibited.
© 2019 MPS. All Rights Reserved.

ORDERING INFORMATION

Part Number*	Package	Top Marking
MP3370GN	SOIC8-EP	*See Below*

* For Tape & Reel, add suffix –Z (e.g. MP3370GN–Z)

TOP MARKING

MP3370
LLLLLLLL
MPSYWW

MP3370: Part number
LLLLLLLL: Lot number
MPS: MPS prefix
Y: Year code
WW: Week code

PACKAGE REFERENCE

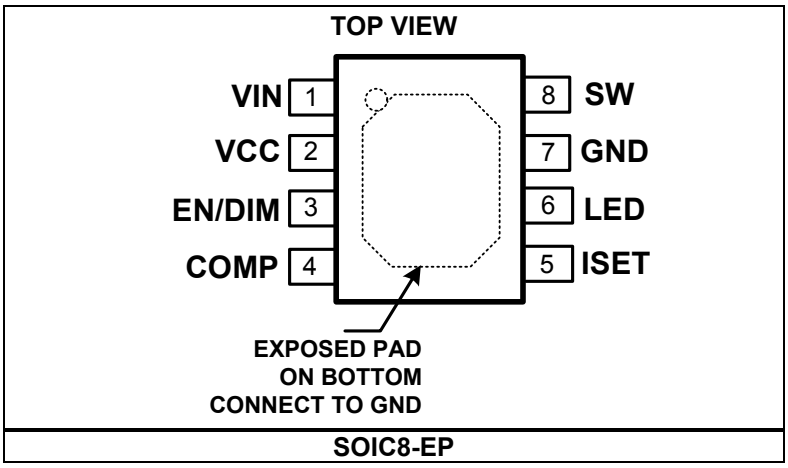

MPS Proprietary Information. Patent Protected Unauthorized Photocopy and Duplication Prohibited.
© 2019 MPS. All Rights Reserved.

PIN FUNCTIONS

Pin #	Name	Description
1	VIN	**Input Supply Pin.** VIN Supplies power to the IC.
2	VCC	**5V LDO output pin.** VCC provides power for internal logic and gate driver. Place a ceramic capacitor as close as possible to this pin to reduce noise.
3	EN/DIM	**EN and Dimming Pin.** When a low-level signal remains for >20ms, the IC is disabled. When the PWM signal >5kHz on this pin, the IC operates in analog dimming mode. When the PWM signal <1k, the IC operates in PWM dimming mode.
4	COMP	**Compensation: Error Amplifier Output.** Connect to a series RC network to compensate the regulator control loop.
5	ISET	**LED Current Setting.** Tie a current setting resistor from this pin to ground to program the current.
6	LED	**LED String Current Input.** Connect the LED String cathode to this pin.
7	GND	**Ground**
8	SW	**Output Switch Node.** SW is the drain of the internal N-Channel MOSFET. Connect the inductor and rectifier to SW to complete the boost converter.

ABSOLUTE MAXIMUM RATINGS (1)

VIN ..... -0.3V to +42V
VLED, VSW..... -0.5V to +50V
All other pins ..... -0.3V to +6V

Continuous power dissipation (T_A = 25°C) (2)
SOIC8-EP 2.5W
Junction temperature ..... 150°C
Lead temperature..... 260°C

Recommended Operating Conditions (3)

Supply voltage (VIN)..... 3.5V to 36V
Operating junction temp.....-40°C to +125°C

Thermal Resistance (4)

	θ_{JA}	θ_{JC}
SOIC8-EP	50	10.°C/W

NOTES:

1) Exceeding these ratings may damage the device.
2) The maximum allowable power dissipation is a function of the maximum junction temperature T_J (MAX), the junction-to-ambient thermal resistance θ_{JA}, and the ambient temperature T_A. The maximum allowable continuous power dissipation at any ambient temperature is calculated by P_D (MAX) = (T_J (MAX)-T_A)/θ_{JA}. Exceeding the maximum allowable power dissipation will produce an excessive die temperature, causing the regulator to go into thermal shutdown. Internal thermal shutdown circuitry protects the device from permanent damage.
3) The device is not guaranteed to function outside of its operating conditions.
4) Measured on JESD51-7, 4-layer PCB.

MPS Proprietary Information. Patent Protected Unauthorized Photocopy and Duplication Prohibited.
© 2019 MPS. All Rights Reserved.

ELECTRICAL CHARACTERISTICS

V_{IN} = 12V, V_{EN}=2V, T_A = 25°C, unless otherwise noted.

Parameter	Symbol	Condition	Min	Typ	Max	Units
Operating input voltage	V_{IN}		3.5		36	V
VIN shutdown supply current		$V_{EN} \leq 0.3V$		0.5	1.0	μA
VIN operating supply current	I_{Q1}	$V_{EN} > 2V$		3		mA
	I_{Q2}	With switching, 400kHz		4		mA
VCC voltage		V_{IN} = 6V to 25V		5		V
VIN under-voltage lockout threshold		V_{IN} rising	2.8	3	3.2	V
VIN under-voltage lockout hysteresis				100		mV
EN/DIM input low voltage					0.4	V
EN/DIM input high voltage			1.2			V
EN pull-down resistance				1		MΩ
SW switching frequency	f_{SW}		350	400	450	kHz
SW maximum duty cycle			85	94		%
SW on resistance				100		mΩ
SW current limit			3			A
SW leakage current		V_{SW} = 25V		65		μA
LEDX regulation voltage	V_{HD}	I_{LED} = 120mA		300		mV
		I_{LED} = 300mA		540		mV
ISET voltage	V_{ISET}			1.2		V
LED current	I_{LED}	R_{ISET} = 24.9kΩ, Tj = 25°C	-2.5%	300	+2.5%	mA
Thermal shutdown (4)				150		°C
OVP threshold			41	43.5	46	V

MPS Proprietary Information. Patent Protected Unauthorized Photocopy and Duplication Prohibited.
© 2019 MPS. All Rights Reserved.

TYPICAL PERFORMANCE CHARACTERISTICS

Performance waveforms are tested on the evaluation board of the Design Example section.
V_{IN} = 12V, L = 22µH, LED=12S, F_{SW}=400kHz, I_{SET}=300mA, T_A = 25° C, unless otherwise noted

Steady State

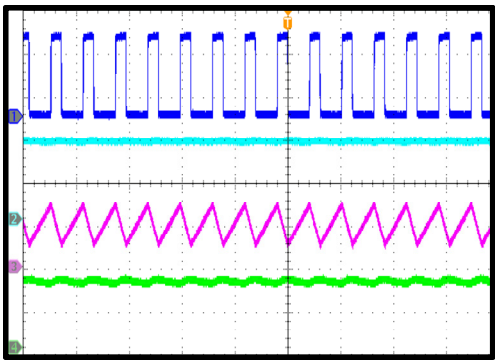

4µs/div.

EN/DIM Power On

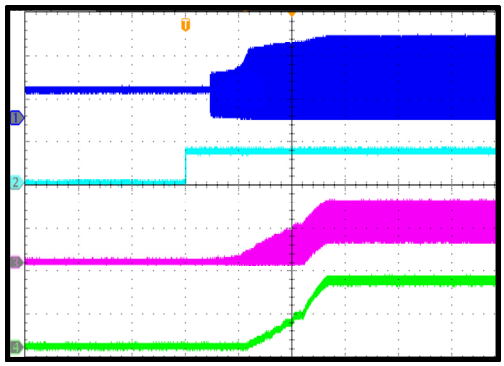

10ms/div.

EN/DIM Power On

F_{DIM}=10kHz , Duty=50%

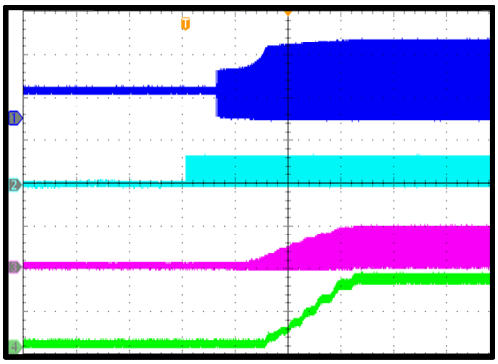

10ms/div.

EN/DIM Power On

F_{DIM}=200Hz , Duty=50%

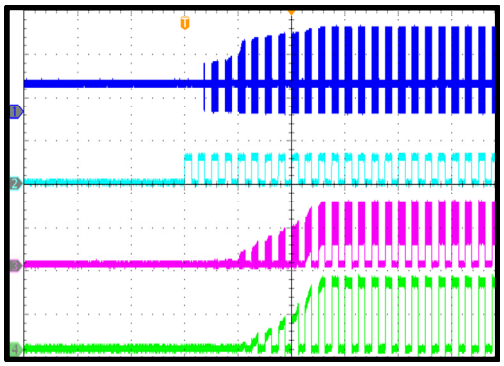

20ms/div.

PWM Dimming

F_{DIM}=200Hz , Duty=50%

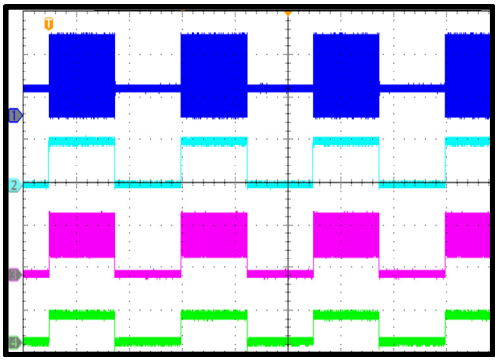

2ms/div.

PWM Dimming

F_{DIM}=200Hz , Duty=0.1%

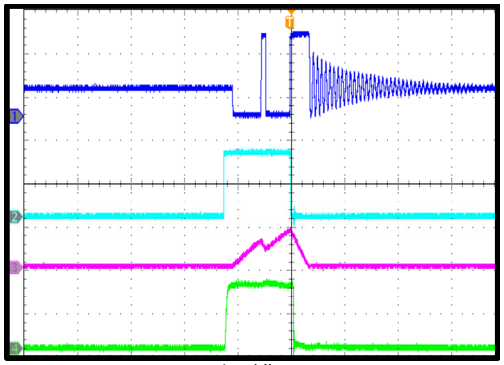

4µs/div.

MPS Proprietary Information. Patent Protected Unauthorized Photocopy and Duplication Prohibited.
© 2019 MPS. All Rights Reserved.

TYPICAL PERFORMANCE CHARACTERISTICS *(continued)*

Performance waveforms are tested on the evaluation board of the Design Example section.
V_{IN} = 12V, L = 22µH, LED=12S, F_{SW}=400kHz, I_{SET}=300mA, T_A = 25° C, unless otherwise noted

Analog Dimming

F_{DIM}=10kHz , Duty=50%

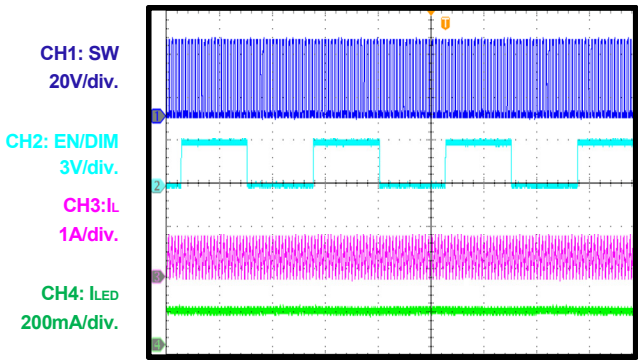

40µs/div.

Analog Dimming

F_{DIM}=10kHz , Duty=1%

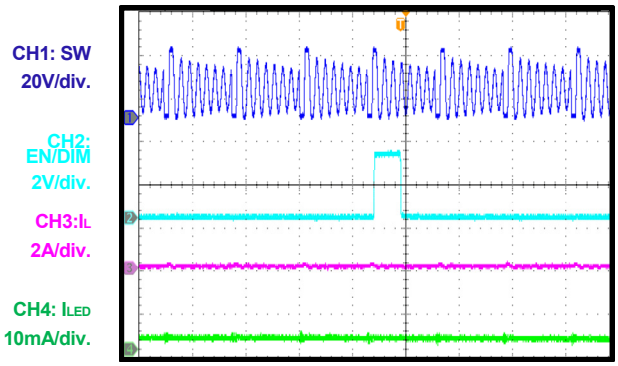

2µs/div.

Open LED String Protection

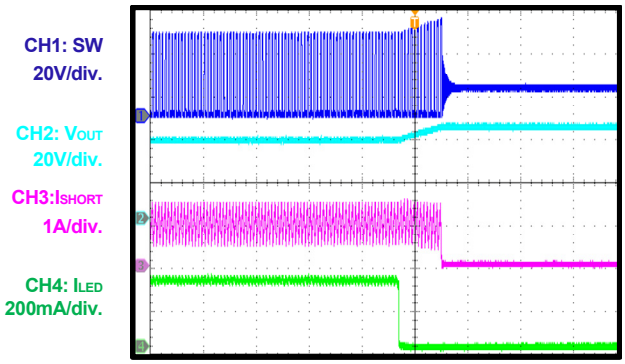

40µs/div.

Short LED String Protection

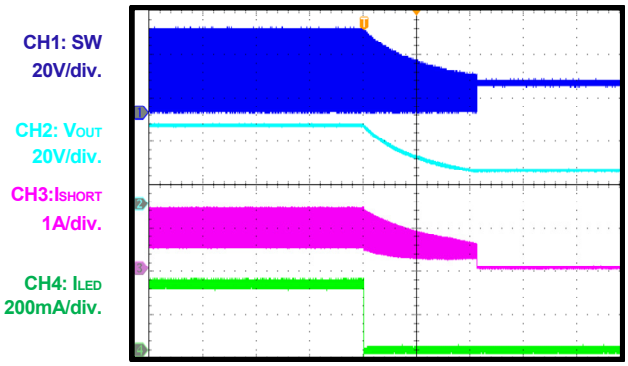

4ms/div.

Short Inductor Protection

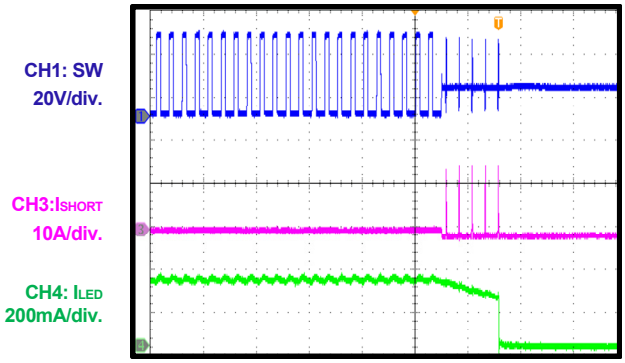

10µs/div.

Short Diode Protection

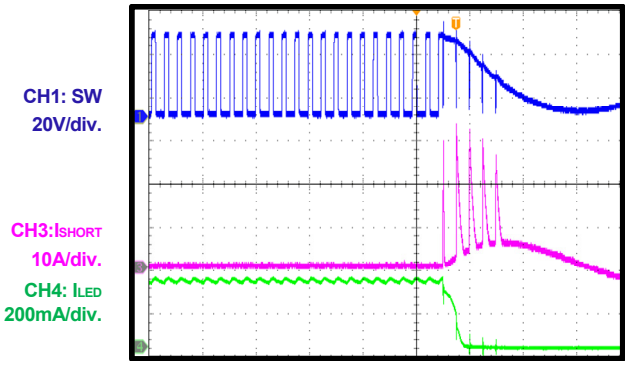

10µs/div.

MPS Proprietary Information. Patent Protected Unauthorized Photocopy and Duplication Prohibited.
© 2019 MPS. All Rights Reserved.

BLOCK DIAGRAM

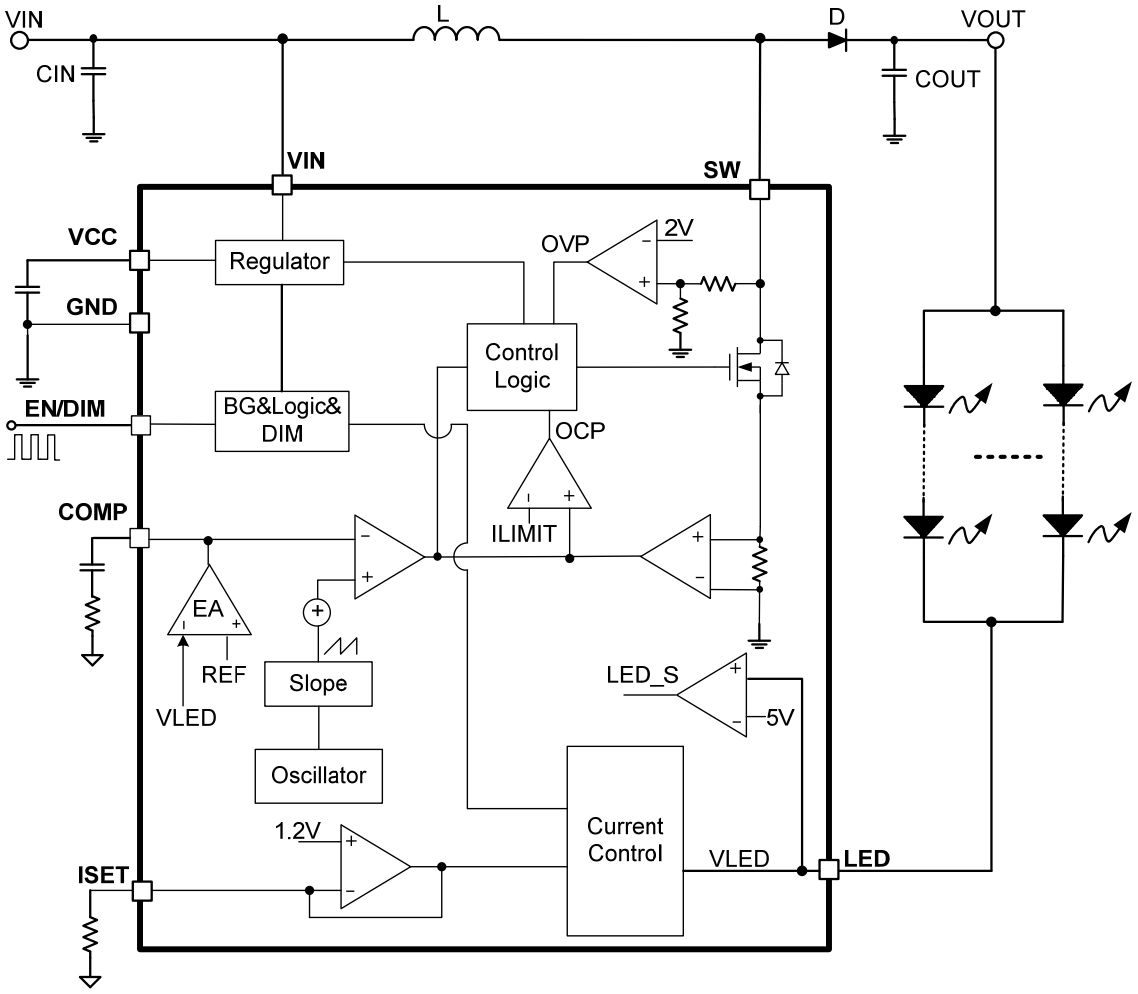

Figure 1: Functional Block Diagram

MPS Proprietary Information. Patent Protected Unauthorized Photocopy and Duplication Prohibited.
© 2019 MPS. All Rights Reserved.

OPERATION

The MP3370 employs a fixed-frequency peak-current-mode step-up converter, with current source, to drive an integrated MOSFET to regulate the LED current programmable by an ISET pin resistor.

Internal 5V Regulator

The MP3370 includes an internal linear regulator (VCC). When VIN is greater than 5.5V, this regulator outputs a 5V power supply to the internal MOSFET switch gate driver and the internal control circuitry. The VCC voltage drops to 0V when the IC shuts down. The IC is disabled until VCC exceeds the UVLO threshold.

System Start-Up

When the input voltage is higher than UVLO, and EN/DIM is higher than the rising threshold, the IC starts boosting the step-up converter with an internal soft start.

Step-Up Converter

The MP3370 employs peak-current-mode control to regulate the output energy. At the beginning of each switching cycle, the internal clock turns on the internal N-MOSFET. A stabilizing ramp added to the output of the current sense amplifier prevents sub-harmonic oscillations for duty cycles greater than 50%. This result is fed into the PWM comparator. When the summed voltage reaches the output voltage of the error amplifier, the internal MOSFET will turn off.

The output voltage of the internal error amplifier is an amplified signal of the difference between the reference voltage and the LED voltage.

If the feedback voltage drops below the reference, the output of the error amplifier increases. It results in more current flowing through the MOSFET, thus increasing the power delivered to the output. This forms a closed loop that regulates the output voltage.

Under light-load operation, especially in the case of VOUT $\approx$ VIN, the converter runs in pulse-skipping mode where the MOSFET turns on for a minimum on-time, and then the converter discharges the power to the output for the remaining period. The external MOSFET remains off until the output voltage needs boosting again.

Enable & Dimming

The EN/DIM pin operates in different functions when different signals are applied on this pin.

a. When EN/DIM is pulled high, the IC is enabled; when EN/DIM remains low for 20ms, the IC is disabled.

b. PWM dimming (FPWM <1kHz)

   PWM dimming is triggered by a PWM signal with a frequency <1kHz on the EN/DIM pin. In PWM dimming mode, the amplitude of the LED current stays at the full LED scale; the LED current is chopped, and its duty cycle follows the PWM signal duty cycle.

c. Analog dimming (FPWM >5kHz)

   The IC operates in analog dimming when applying a PWM signal with a frequency higher than 5kHz. The LED current amplitude is proportional to the PWM duty cycle.

Protection

The MP3370 includes under-voltage lockout, over-voltage protection, short LED protection and short inductor/diode protection.

A. Under-Voltage Lockout

The MP3370 integrates VIN UVLO. The internal circuit does not work until the VIN voltage reaches the UVLO rising threshold.

B. Over-Voltage Protection

Over-voltage protection is detected by the SW pin. When the SW voltage hits its high threshold, the over-voltage protection is triggered, and the IC latches off.

C. Open LED Protection

Open-string protection is achieved by detecting the voltage of the SW and LED pin. During operation, if the string is open, the LED pin voltage is low to ground, and the IC keeps charging the output voltage until it reaches the OVP point, then the IC latches off.

MPS Proprietary Information. Patent Protected Unauthorized Photocopy and Duplication Prohibited.
© 2019 MPS. All Rights Reserved.

D. Short LED Protection

The MP3370 monitors the LED pin voltage to determine if a short-string fault has occurred. When the string is shorted, the LED pin tolerates high voltage stress. If the LED pin voltage is higher than the short-protection threshold, an internal counter is started. If the fault condition lasts about 9ms (dimming duty cycle is 100%), the IC latches off.

E. Cycle-by-Cycle Current Limit

To prevent the external components exceeding current stress ratings in some conditions, the IC has cycle-by-cycle current limit protection. When the current exceeds the current limit value, the IC will stop switching until the next clock cycle.

Latch-off Current Limit Protection

To avoid device damage caused by an excessive current rating (this may occur in extreme conditions, like Inductor or Diode short), the MP3370 provides a latch-off current limit protection when the current flowing through the internal MOSFET hits the threshold and lasts for 5 switching cycles.

F. Over-Temperature Protection

To prevent the IC from damage when operating at an exceedingly high temperature, thermal protection is implemented in this chip by detecting the silicon die temperature. When the die temperature exceeds the upper threshold, the IC shutdowns and returns to normal operation once the temperature drops below the lower threshold.

MPS Proprietary Information. Patent Protected Unauthorized Photocopy and Duplication Prohibited.
© 2019 MPS. All Rights Reserved.

APPLICATION INFORMATION

LED Current Setting

The LED current amplitude is set by an external resistor connected from the ISET pin to GND. To set the LED current amplitude setting use equation (1):

$$ILED(mA) = \frac{7470}{R_{ISET}(k\Omega)} \quad (1)$$

For R_{ISET}=24.9kΩ, the LED current is 300mA.

Selecting the Inductor

Select the inductor to allow the circuit to operate in Continuous Conduction Mode (CCM) using equation (2):

$$L = \frac{\eta \times V_{IN} \times (V_O - V_{IN})}{V_O \times \Delta I_L \times f_S} \quad (2)$$

Where, ΔI_L is the peak-to-peak current of the inductor current, and η is the efficiency. Design the ΔI_L 30% to 60% of the inductor average current using equation (3):

$$I_{L_AVG} = \frac{V_O \times I_{LED}}{\eta \times V_{IN}} \quad (3)$$

Make sure the inductor saturated current is greater than the inductor peak current using equation (4):

$$I_{L_PK} = I_{L_AVG} + \frac{1}{2}\Delta I_L \quad (4)$$

Selecting the Diode

Choose a diode with a voltage rating greater than the OVP point with a 20% margin. The current rating is greater than the LED current, 2 or 3 times the LED current is suitable.

Selecting the Input Capacitor

The input capacitor reduces the surge current drawn from the input supply and the switching noise from the device. Use a ceramic capacitor with X7R dielectrics, low ESR, and small temperature coefficients.

Select a capacitor to limit the input voltage ripple ΔV_{IN} to less than 5% to 10% of its DC value using equation (5):

$$C_{IN} \geq \frac{\Delta I_L}{8 \times \Delta V_{IN} \times f_s} \quad (5)$$

Selecting the Output Capacitor

The output capacitor limits the output voltage ripple ΔV_O (normally less than 1% to 5% of its DC value), and ensures feedback loop stability. Select the output capacitor using equation (6):

$$C_{OUT} \geq \frac{I_{LED} \times (V_O - V_{IN})}{\Delta V_O \times f_s \times V_O} \quad (6)$$

PCB Layout Guidelines

Careful attention must be given to the PCB layout and component placement. Efficient PCB layout of the high-frequency switching path is critical to prevent noise and electromagnetic interference problems. For best results, follow the guidelines below:

1. Keep the loop of SW to GND, the external diode, and the output capacitor as short as possible, since it is flowing with a high-frequency pulse current.

2. Place a ceramic capacitor close to the VCC, since it is susceptible to noise.

MPS Proprietary Information. Patent Protected Unauthorized Photocopy and Duplication Prohibited.
© 2019 MPS. All Rights Reserved.

TYPICAL APPLICATION CIRCUITS

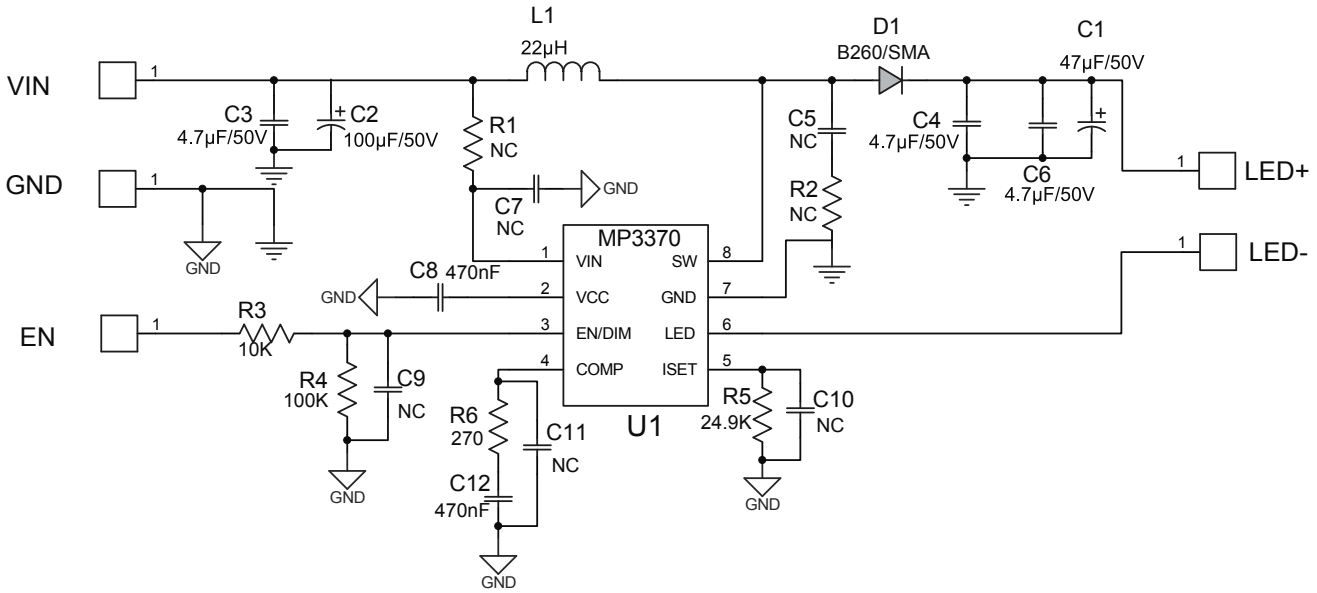

Figure 2: Typical Application Circuits

MPS Proprietary Information. Patent Protected Unauthorized Photocopy and Duplication Prohibited.
© 2019 MPS. All Rights Reserved.

PACKAGE INFORMATION

SOIC8-EP

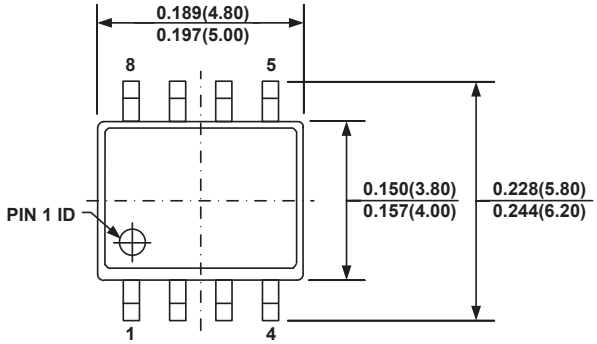

TOP VIEW

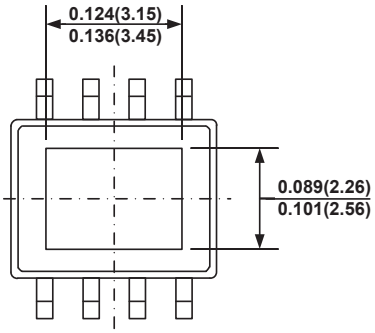

BOTTOM VIEW

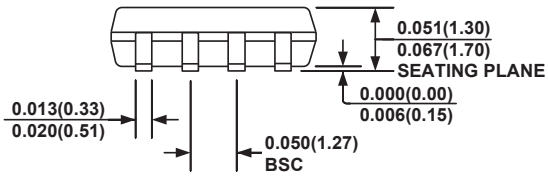

FRONT VIEW

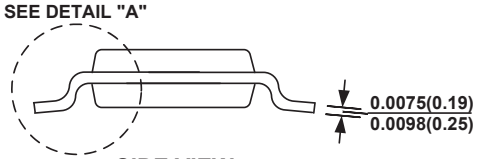

SIDE VIEW

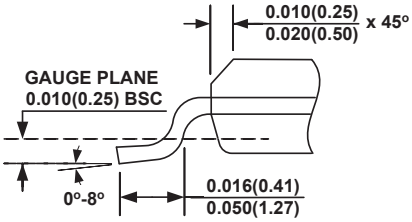

DETAIL "A"

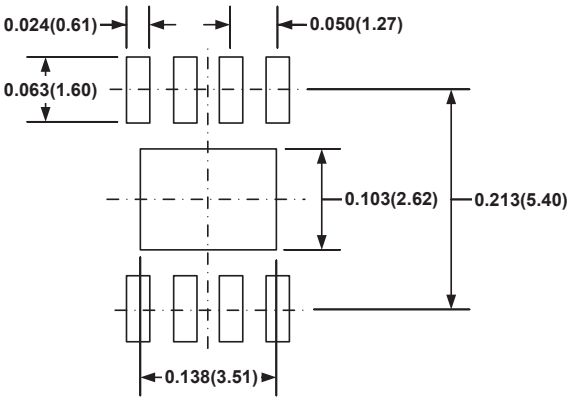

RECOMMENDED LAND PATTERN

NOTE:

1) CONTROL DIMENSION IS IN INCHES. DIMENSION IN BRACKET IS IN MILLIMETERS.
2) PACKAGE LENGTH DOES NOT INCLUDE MOLD FLASH, PROTRUSIONS OR GATE BURRS.
3) PACKAGE WIDTH DOES NOT INCLUDE INTERLEAD FLASH OR PROTRUSIONS.
4) LEAD COPLANARITY (BOTTOM OF LEADS AFTER FORMING) SHALL BE 0.004" INCHES MAX.
5) DRAWING CONFORMS TO JEDEC MS-012, VARIATION BA.
6) DRAWING IS NOT TO SCALE.

NOTICE: MPS believes the information in this document to be accurate and reliable. However, it is subject to change without notice. Contact MPS for current specifications. MPS encourages users of its products to ensure that third party Intellectual Property rights are not infringed upon when integrating MPS products into any application. MPS cannot assume any legal responsibility for any said applications.

MPS Proprietary Information. Patent Protected Unauthorized Photocopy and Duplication Prohibited.
© 2019 MPS. All Rights Reserved.