MP26060

1A Linear
Li-Ion Battery Charger with Trickle Charge

The Future of Analog IC Technology

DESCRIPTION

The MP26060 is a linear, high-performance single cell Li-Ion battery charger. By integrating high voltage input protection into the charger IC, the MP26060 can tolerate an input surge up to 24V.

The device features constant current (CC) and constant voltage (CV) charging modes with programmable charge currents (85mA to 1A), programmable battery full threshold, thermal protection, battery temperature monitoring, reverse current blocking, and trickle charge. The device also provides AC adapter power good and charge status indications to the system.

MP26060 is available in a 10-pin 3mm x 3mm QFN package.

FEATURES

- Input Surge Up to 24V
- Adapter or USB Input
- 4.15V Output for Safe Charge
- Programmable Charge Current: 85mA to 1A
- Proprietary Constant Voltage Auto Recharge
- Proprietary Over-Voltage Protection
- 0.75% V_{BATT} Accuracy
- <1μA Battery Reverse Current
- 90μA Standby Current from V_{IN}
- Over Current Protection
- AC Adapter Power Good Indicator
- Charge Status Indicator
- Programmable Soft-Start
- Programmable Charge Termination Current Threshold
- Tiny 10-Pin QFN (3mm x 3mm) Package

APPLICATIONS

- Cell Phones
- MP3 Players
- Smart Phones
- PDAs
- Digital Cameras

"MPS" and "The Future of Analog IC Technology" are Registered Trademarks of Monolithic Power Systems, Inc.

TYPICAL APPLICATION

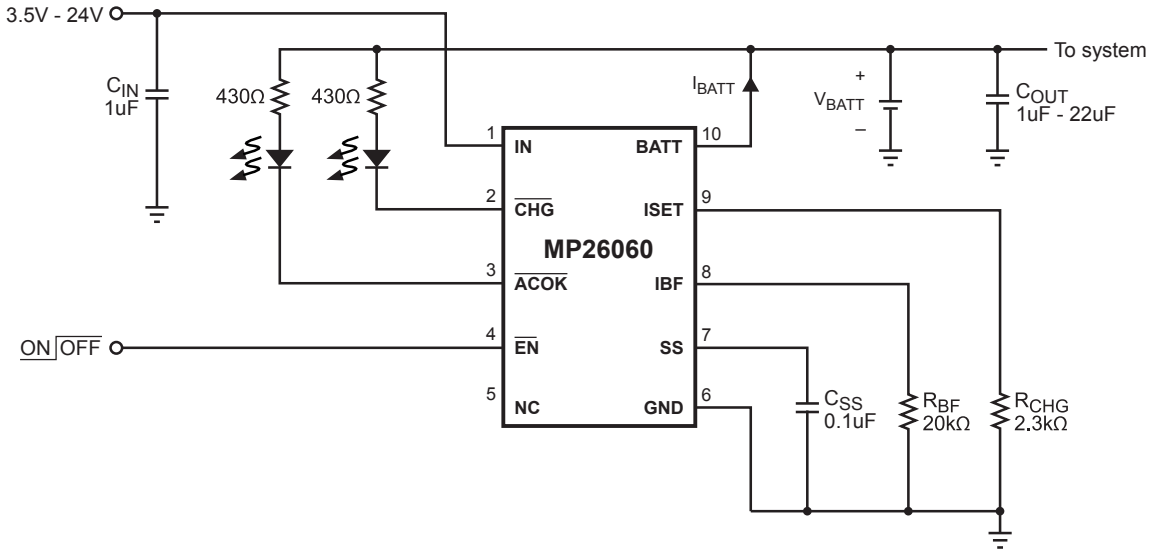

MPS Proprietary Information. Unauthorized Photocopy and Duplication Prohibited.
© 2010 MPS. All Rights Reserved.

ORDERING INFORMATION

Part Number*	Package	Top Marking	Free Air Temperature (T_A)
MP26060EQ	QFN10 (3mm x 3mm)	4SYW	–20°C to +85°C

For Tape & Reel, add suffix –Z (e.g. MP26060EQ–Z).
For RoHS compliant packaging, add suffix –LF (e.g. MP26060EQ–LF–Z)

PACKAGE REFERENCE

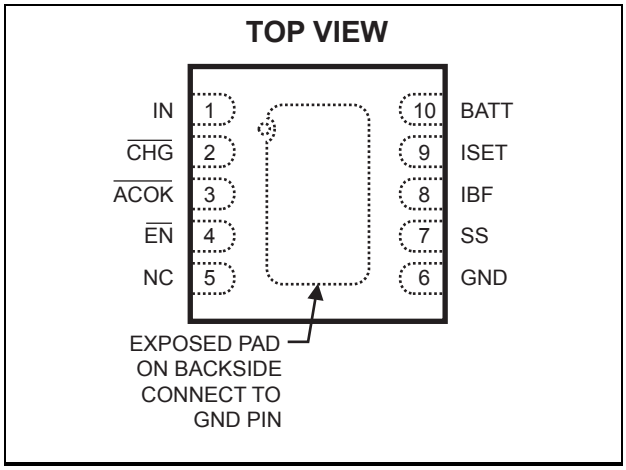

ABSOLUTE MAXIMUM RATINGS (1)

IN to GND .....–0.3V to +24V
All Other Pins to GND.....–0.3V to +6.5V
Continuous Power Dissipation (T_A = +25°C) (2)
.....2.5W
Junction Temperature.....140°C
Lead Temperature .....260°C
Storage Temperature..... –65°C to +150°C

Recommended Operating Conditions (3)

Nominal Supply Voltage V_{IN}.....3.5V to 6.5V
Operating Junct. Temp (T_J) ..... -20°C to +125°C

Thermal Resistance (4) θ_{JA} θ_{JC}

QFN10 (3mm x 3mm) .....50 ..... 12 ... °C/W

Notes:

1) Exceeding these ratings may damage the device.
2) The maximum allowable power dissipation is a function of the maximum junction temperature T_J (MAX), the junction-to-ambient thermal resistance θ_{JA}, and the ambient temperature T_A. The maximum allowable continuous power dissipation at any ambient temperature is calculated by P_D (MAX) = (T_J (MAX)-T_A)/θ_{JA}. Exceeding the maximum allowable power dissipation will cause excessive die temperature, and the regulator will go into thermal shutdown. Internal thermal shutdown circuitry protects the device from permanent damage.
3) The device is not guaranteed to function outside of its operating conditions.
4) Measured on JESD51-7, 4-layer PCB.

MPS Proprietary Information. Unauthorized Photocopy and Duplication Prohibited.
© 2010 MPS. All Rights Reserved.

ELECTRICAL CHARACTERISTICS

V_{IN} = 5V, V_{EN} = 0V, T_A = +25°C, unless otherwise noted.

Parameter	Symbol	Condition	Min	Typ	Max	Units
Supply Current	I_{SUPPLY}	$\overline{EN}$ = High		40		
		$\overline{EN}$ = Low, I_{CHG} = 0A		500		
Over Input Voltage Protection	OVP	V_{IN} Rise	6.8	7.0	7.2	V
OVP Hysteresis				400		mV
Maximum input voltage	DC	Leakage < 500 µA			24	V
Battery Voltage Regulation	V_{BATT}	T_A = +25°C, I_{BATT} = 0	4.129	4.15	4.171	V
		T_A = –5°C to +75°C, I_{BATT} = 0	4.108	4.15	4.192	V
Battery Over-Voltage Protection	I_{BATT_OVP}	V_{BATT} = 4.20V			0	µA
Constant Current Regulation	I_{CHG}	V_{IN} = 5V, V_{BATT} = 3.8V R_{CHG} = 3.3kΩ	450	515	580	mA
Constant Current Variation		V_{IN} = 5V, V_{BATT} = 3.8V, T_J = 0°C to +120°C, R_{CHG} = 1.6 kΩ to 8.0 kΩ	87	100	113	$\%I_{CHG}$ (5)
Trickle Current		V_{IN} = 5V, V_{BATT} = 2.3V	5	10	15	$\%I_{CHG}$ (5)
Trickle Threshold Voltage			2.45	2.6	2.75	V
Trickle Voltage Hysteresis				100		mV
Battery Full Programming Range	I_{BF}	Refer to Operation section for programming I_{BF}	10		50	$\%I_{CHG}$ (5)
IBF Accuracy			75		125	$\%I_{BF}$ (6)
SS Pin Voltage		C_{SS} = 0.1uF, V_{BATT} = 3.6V	1.19	1.23	1.27	V
Input $\overline{ACOK}$ Up Range			6.8	7.0	7.2	V
Input $\overline{ACOK}$ Low Range			1.8	2.5	3.2	V
$\overline{EN}$ Trip Threshold High			2.7			V
$\overline{EN}$ Trip Threshold Low					0.4	V
$\overline{CHG}$, $\overline{ACOK}$ Sink Current		Pin Voltage = 0.4V	8			mA
Battery Reverse Current to BATT Pin		$\overline{EN}$ = Low and Input = Floating or 0V			1	µA
Switch-On Resistance	R_{ON}	V_{BATT} = 3.8V, I_{BATT} = 300mA, R_{CHG} = 1.7kΩ		0.35		Ω
Soft Thermal Shutdown Threshold			105	120	135	°C
Soft Thermal Shutdown Hysteresis				10		°C
Soft-Start Time		From trickle to 90% of full current, C_{SS} = 0.1µF	10	20	35	ms

Notes:

5) I_{CHG} is the target preprogrammed charge current (Die temperature below 110°C).

6) I_{BF} is the target preprogrammed battery full current threshold.

MPS Proprietary Information. Unauthorized Photocopy and Duplication Prohibited.
© 2010 MPS. All Rights Reserved.

PIN FUNCTIONS

Pin #	Name	Description
1	IN	Input Supply Pin. IN receives the AC adapter or USB supply voltage.
2	$\overline{CHG}$	Open-Drain Charge Status Indicator. This pin is low during charging.
3	$\overline{ACOK}$	Open-Drain Input ACOK Indicator. This pin is low if the voltage at the IN pin is between 2.5V and 6.5V.
4	$\overline{EN}$	Charger IC Enable. An input “Low” signal at this pin or if the pin is floating will enable the IC.
5	NC	No connection pin
6	Exposed Pad GND	Ground. Connect exposed pad to the GND pin
7	SS	Soft-Start Timer. Connect this pin to an external capacitor to program the soft-start startup time using the equation: $T_{SS} = \frac{C_{SS}}{0.1\mu F} \times 20m\sec$.
8	IBF	Charge Status Threshold Program. Connect this pin to an external resistor to program the charge termination current or battery full charge current.
9	ISET	Constant Charge Current Program. Connect this pin to an external resistor to program the charging current in CC Mode.
10	BATT	Charger Output.

MPS Proprietary Information. Unauthorized Photocopy and Duplication Prohibited.
© 2010 MPS. All Rights Reserved.

TYPICAL PERFORMANCE CHARACTERISTICS

V_{IN} = 5V, C_{IN} = 10µF, C_{OUT} = 4.7µF, T_A = +25°C, unless otherwise noted.

Battery Charge Curve

R_{CHG} = 2.87kΩ

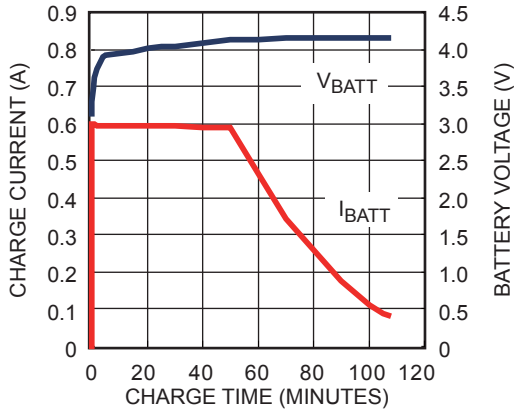

Charge Current vs Battery Voltage

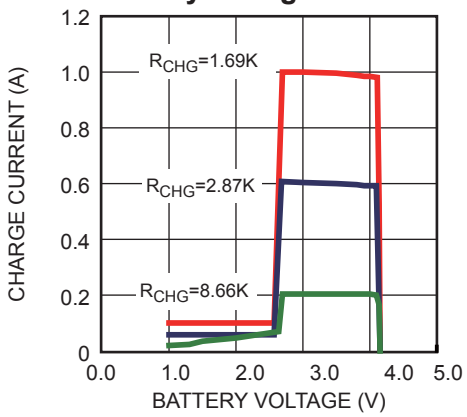

Battery Voltage vs Input Voltage

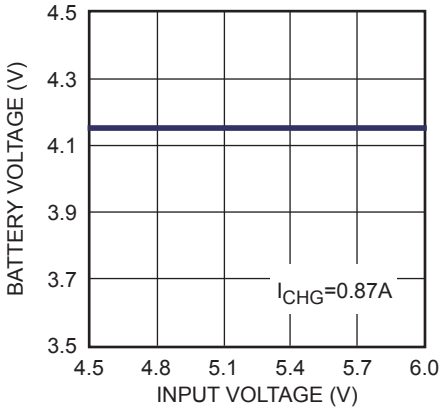

Charge Currents vs Battery Voltage

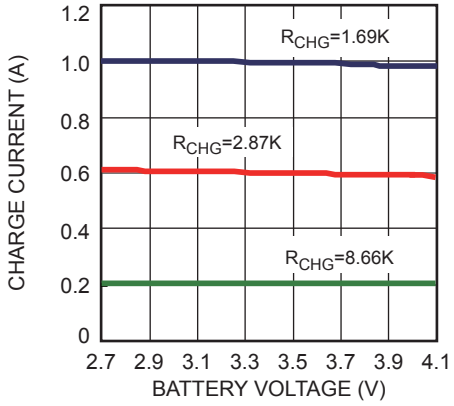

Startup with $\overline{EN}$

R_{CHG} = 1.96kΩ

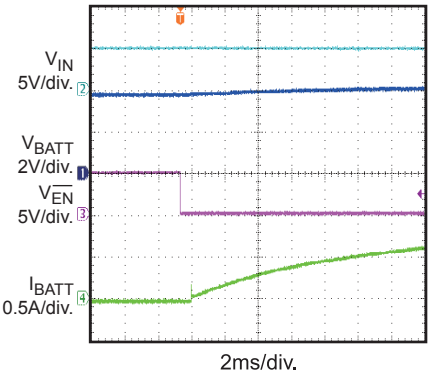

Shutdown with $\overline{EN}$

R_{CHG} = 1.96kΩ

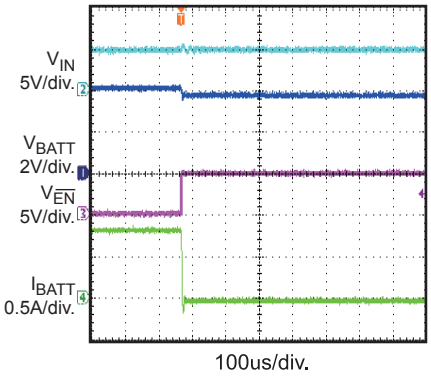

MPS Proprietary Information. Unauthorized Photocopy and Duplication Prohibited.
© 2010 MPS. All Rights Reserved.

TYPICAL PERFORMANCE CHARACTERISTICS *(continued)*

V_{IN} = 5V, C_{IN} = 10µF, C_{OUT} = 4.7µF, T_A = +25°C, unless otherwise noted.

Charge Current vs Input Voltage

R_{CHG} = 2.87kΩ

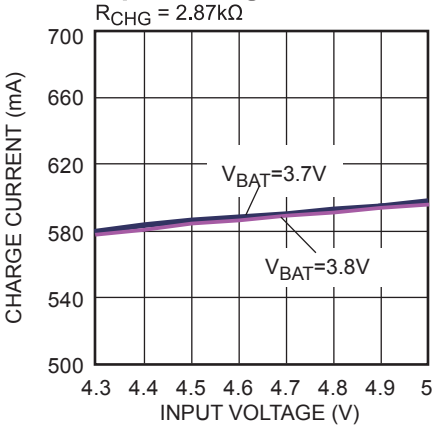

Charge Current vs R_{CHG} Resistance

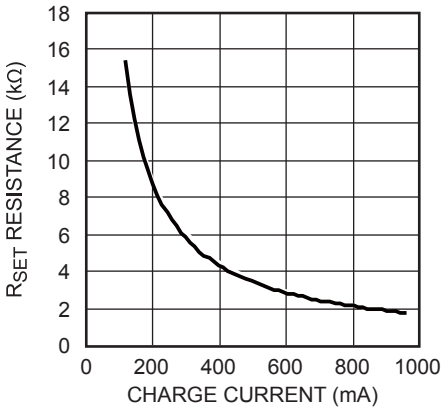

Reverse Current vs Battery Voltage

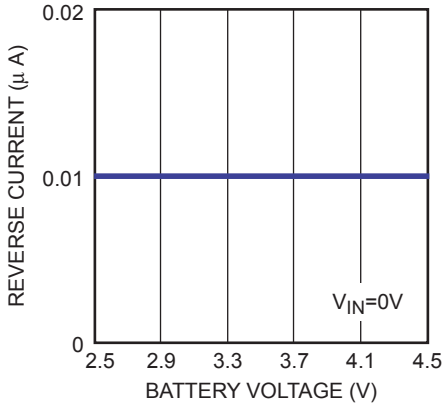

Charge Current vs Temperature

V_{BATT} = 3.8V, R_{CHG} = 1.96kΩ

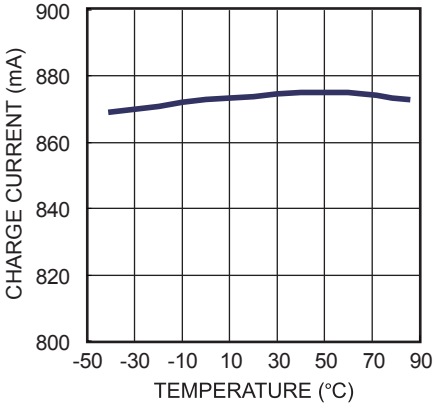

Battery Voltage vs Temperature

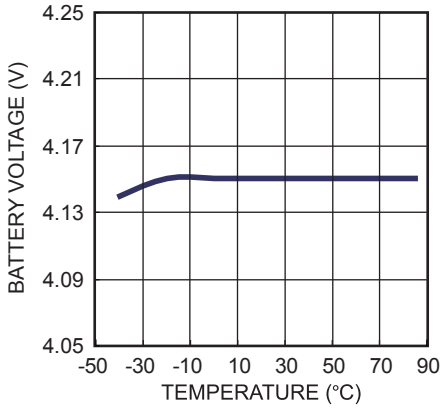

MPS Proprietary Information. Unauthorized Photocopy and Duplication Prohibited.
© 2010 MPS. All Rights Reserved.

BLOCK DIAGRAM

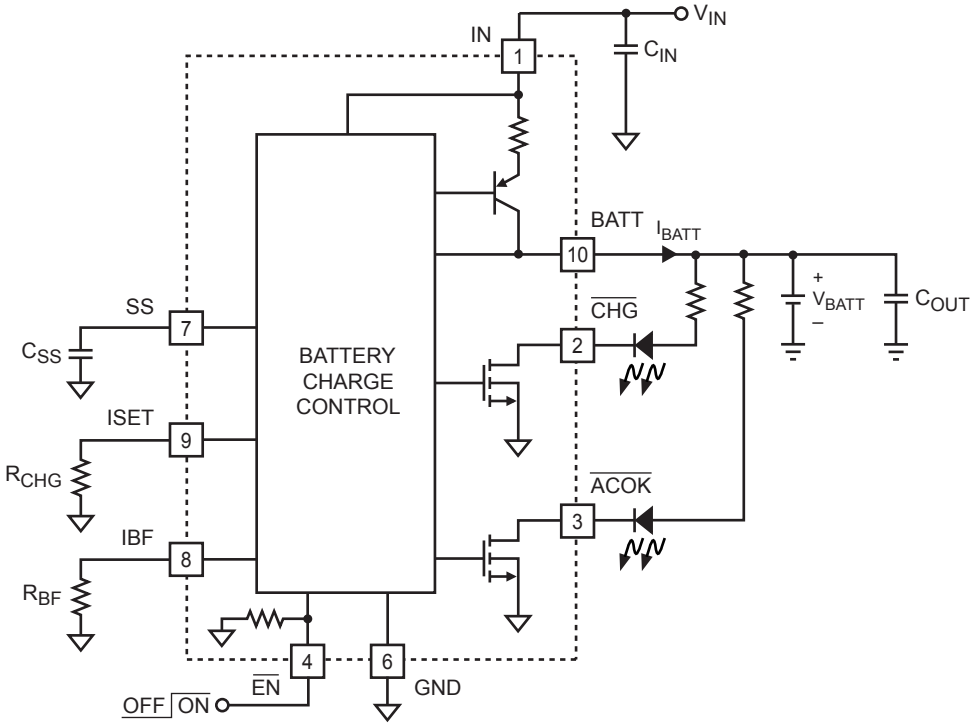

Figure 1—Functional Block Diagram

OPERATION

Input Voltage Range

The MP26060 has built-in input voltage surge protection up to +24V. The charger IC will be automatically disabled when the input voltage is lower than 2.5V or higher than 6.5V. The open-drain pin $\overline{ACOK}$ is used to indicate an input power good condition (i.e. 2.5V<V_{IN}<6.5V). If the input voltage is lower than the battery voltage, the IC is also disabled to prevent the battery from draining.

Charge Cycle (Mode Change: Trickle -> CC-> CV)

Figure 2 below shows the typical charging profile for the MP26060. Figure 3 shows the typical charging procedure. For a fully depleted battery with a terminal voltage lower than 2.6V, the MP26060 will start with the trickle charge (preconditioning) at 10% of the programmed full charge current. After the battery voltage reaches 2.6V, the charger begins charging at the constant current of the programmed value (I_{CHG}). This is referred to as Constant Current (CC) mode. Once the battery voltage reaches 4.15V, the charger will operate in the constant voltage (CV) mode until the battery is fully charged. The charge current drops during CV mode, and the battery full indication is set when the charge current in the CV mode is reduced to the programmed full battery current (I_{BF}).

MPS Proprietary Information. Unauthorized Photocopy and Duplication Prohibited.
© 2010 MPS. All Rights Reserved.

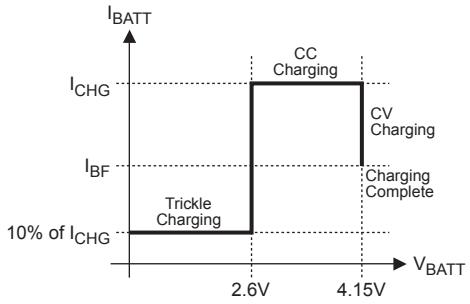

Figure 2—Typical Charging Profile

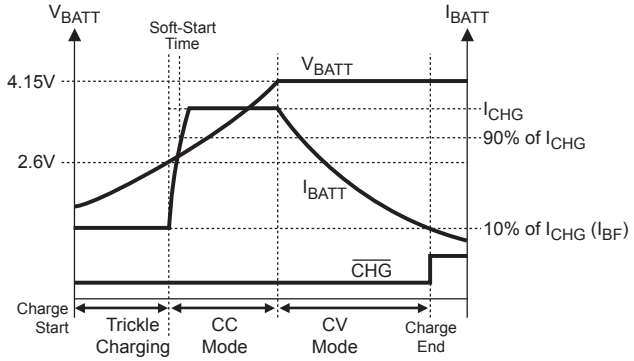

Figure 3—Typical Charging Procedure

Battery Over-Voltage Protection and Automatic Recharge

At any time when V_{BATT} is 50mV higher than the trimmed charge target, the MP26060 reduces its charge current to 0μA. This ensures the safety of the battery. Also, the CV control loop always monitors the battery voltage such that it will automatically recharge the battery when it is depleted below the target level.

Programming of Charge Current and Battery Full Current

The charge current (I_{CHG}) is set by a resistor (R_{CHG}) connecting from the ISET pin to GND. See Table 1 and Figure 4. The relationship of the charge current and the programming resistance is established by:

$$I_{CHG} = \frac{1A \times 1.7k\Omega}{R_{CHG}}$$

R_{CHG} (kΩ)	I_{CHG} (mA)
2.43	700
2.80	600
3.4	500
4.22	400
5.6	300

Table 1—R_{CHG} and I_{CHG} Relationship

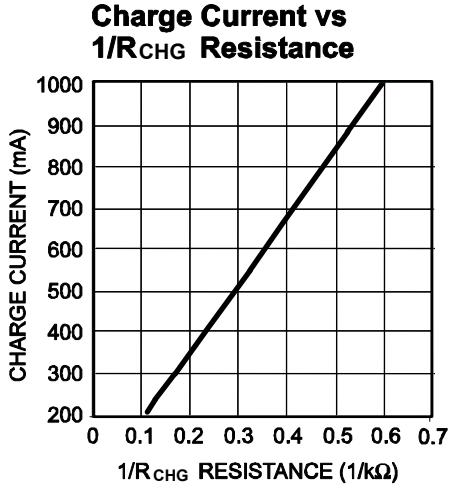

Figure 4—Charge Current vs 1/R_{CHG} Resistance

The recommended resistance for programming the charge current is 2.3kΩ<R_{CHG}<11kΩ. The battery full charge current threshold (I_{BF}) is programmed by connecting a resistor R_{BF} from the I_{BF} pin to GND:

$$I_{BF} = \frac{1A \times 1.7k\Omega}{R_{BF}}$$

Where 2R_{CHG}<R_{BF}<10R_{CHG}. The open-drain pin $\overline{CHG}$ is used to indicate charging status. When the battery full condition is reached or any other condition prevents the charger from charging, $\overline{CHG}$ will become a floating pin.

MPS Proprietary Information. Unauthorized Photocopy and Duplication Prohibited.
© 2010 MPS. All Rights Reserved.

Charge Status Indicator (CHG)

The MP26060 has an integrated charge status pin that remains low while the battery is charging. Once the charge current has reduced to the battery full charge current threshold (I_{BF}), the CHG pin will become high impedance.

The $\overline{ACOK}$ and $\overline{CHG}$ can be used to drive LEDs (Figure 1) or to interface with the system.

When interfacing with the system, glitches may occur on the power supply input (IN) when the AC-power adapter is plugged in and out. It is desirable to blank the glitches so that the system can properly operate with AC power adaptor. A simple Solution is to add the RC filter (C5 and C6)on the pin $\overline{ACOK}$ / $\overline{CHG}$ as shown in Figure 5. The size of C5 and C6 depends on the width of the glitch and the rise time of the interface.

Thermal Protection

The MP26060 has proprietary thermal protection to prevent the IC from overheating. When in thermal protection mode, the charge current becomes a saw-tooth waveform instead of a DC current. The average current of the saw-tooth waveform will be lower than the programmed DC charge current to prevent the IC from overheating. The frequency and amplitude of the saw-tooth current waveform can be altered by changing the capacitance value connected to the SS pin. Operating in thermal protection mode will slow down the charging process. Lowering the input voltage and enhancing thermal dissipation to the environment can effectively prevent the IC from going into thermal protection mode.

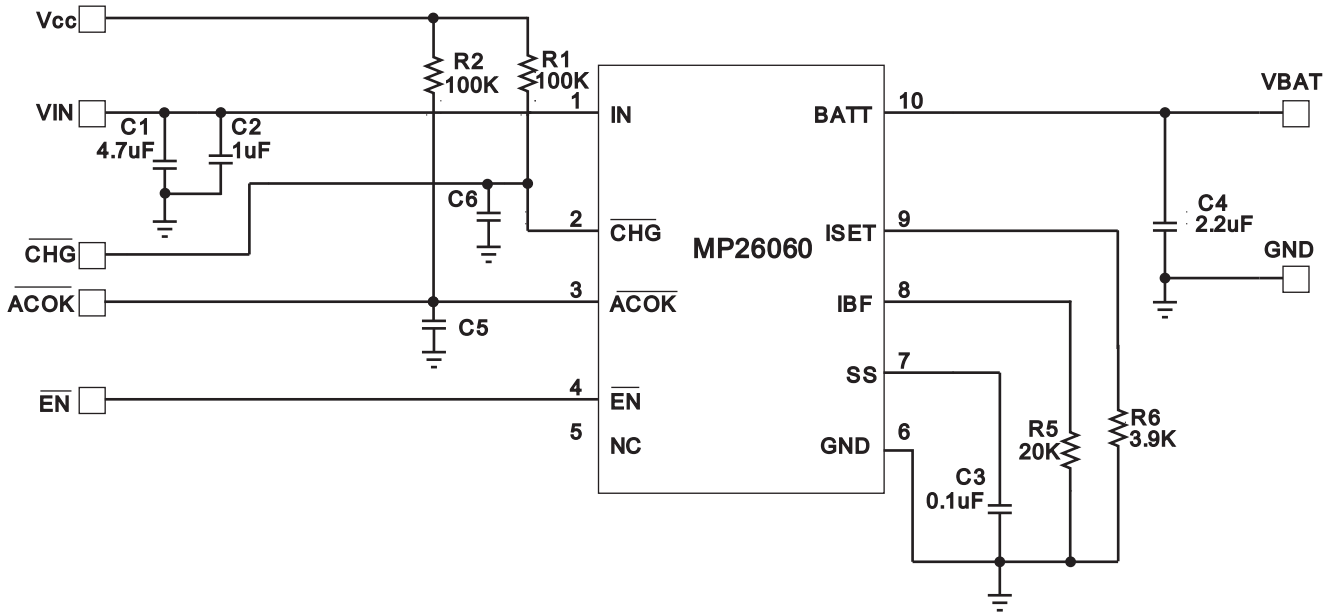

Figure 5—Filtered Charge Status & Input Power Good Interface

MPS Proprietary Information. Unauthorized Photocopy and Duplication Prohibited.
© 2010 MPS. All Rights Reserved.

APPLICATION

Flow Chart of Operation

Power-On Reset (POR) feature can be applied to the MP26060 to ensure that the device starts operating in a known state. The flow chart in Figure 5 describes the conditions and operation modes of the MP26060. CVC and CCC stand for “constant voltage charge” and “constant current charge”, respectively.

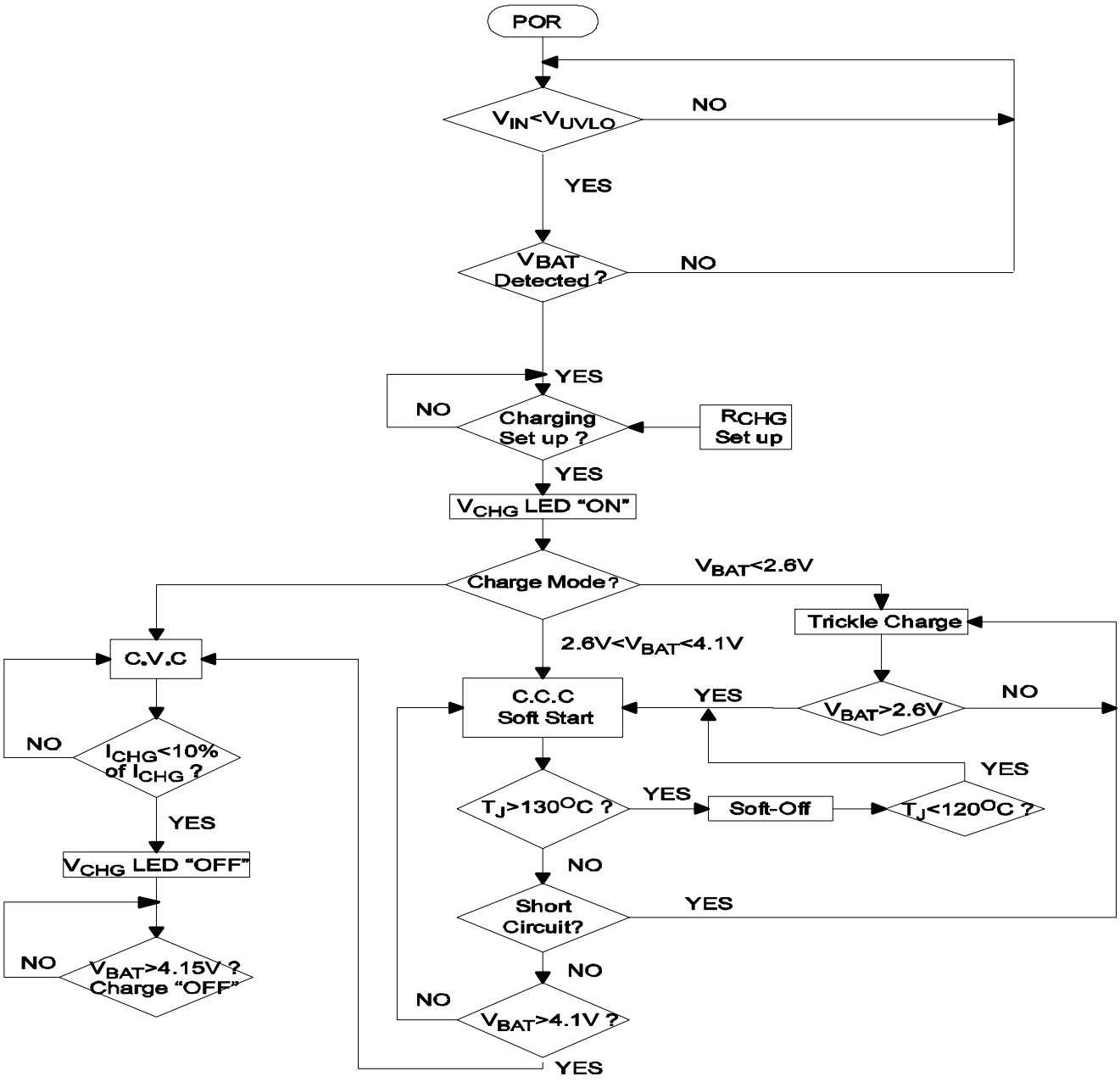

Figure 6—Flow Chart of Operation

MPS Proprietary Information. Unauthorized Photocopy and Duplication Prohibited.
© 2010 MPS. All Rights Reserved.

PACKAGE INFORMATION

QFN10 (3mm x 3mm)

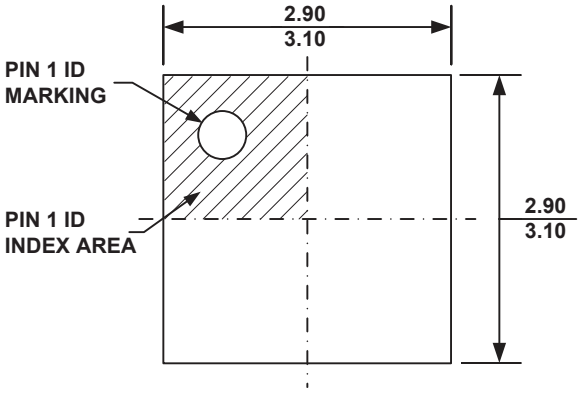

TOP VIEW

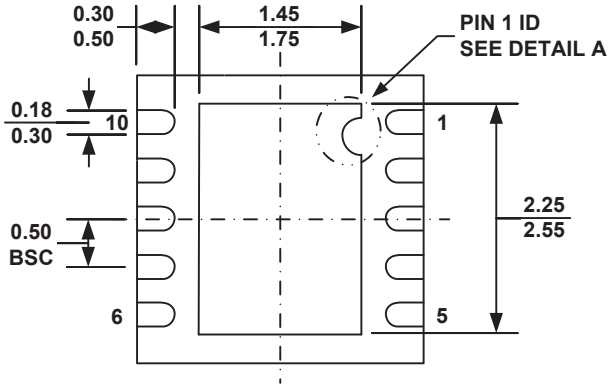

BOTTOM VIEW

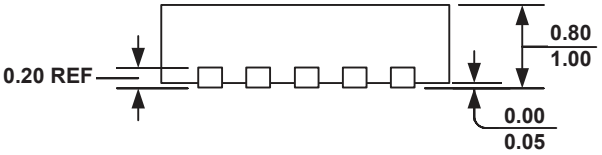

SIDE VIEW

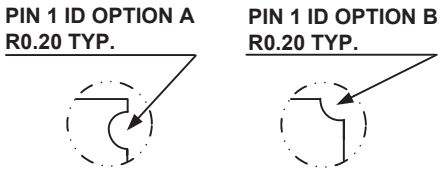

DETAIL A

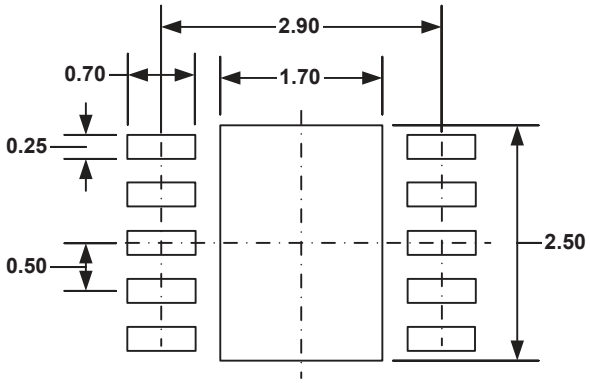

RECOMMENDED LAND PATTERN

NOTE:

1) ALL DIMENSIONS ARE IN MILLIMETERS.
2) EXPOSED PADDLE SIZE DOES NOT INCLUDE MOLD FLASH.
3) LEAD COPLANARITY SHALL BE 0.10 MILLIMETER MAX.
4) DRAWING CONFORMS TO JEDEC MO-229, VARIATION VEED-5.
5) DRAWING IS NOT TO SCALE.

NOTICE: The information in this document is subject to change without notice. Users should warrant and guarantee that third party Intellectual Property rights are not infringed upon when integrating MPS products into any application. MPS will not assume any legal responsibility for any said applications.

MPS Proprietary Information. Unauthorized Photocopy and Duplication Prohibited.
© 2010 MPS. All Rights Reserved.