MP2488

200kHz, 55V Input, 2A High Power LED Driver

The Future of Analog IC Technology

DESCRIPTION

The MP2488 is a fixed frequency step-down switching regulator to deliver a constant current of up to 2A to high power LEDs. It integrates a high-side, high voltage power MOSFET with a current limit of 3.2A. The wide 4.5V to 55V input range accommodates a variety of step-down applications, making it ideal for automotive, industry and general lighting applications. Peak current mode control and 200mV reference are applied for fast loop response, easy compensation and accurate LED current regulation. The switching frequency is programmable with an external resistor up to 200kHz, which can prevent EMI (Electromagnetic Interference) noise problems. The thermal shut down provides reliable, fault tolerant operations. A 12μA quiescent current in shutdown mode allows its use in battery-powered applications.

The MP2488 is available in small 3x3mm 10-pin QFN and SOIC8 with exposed pad packages.

FEATURES

- Wide 4.5V to 55V Operating Input Range
- 220mΩ Internal Power MOSFET
- Up to 200kHz Programmable Switching Frequency
- 130μA Quiescent Current
- Ceramic Capacitor Stable
- Internal Soft-Start
- Up to 97.5% Efficiency
- 200mV reference voltage for high efficiency
- Available in 3x3mm 10-Pin QFN and SOIC8 with Exposed Pad Packages

APPLICATIONS

- High Power LED Driver
- Automotive, and General Lighting
- Constant Source

For MPS green status, please visit MPS website under Quality Assurance. "MPS" and "The Future of Analog IC Technology" are Registered Trademarks of Monolithic Power Systems, Inc.

TYPICAL APPLICATION

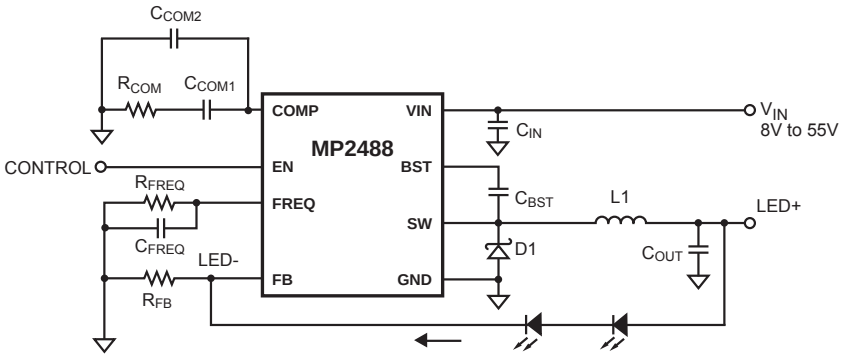

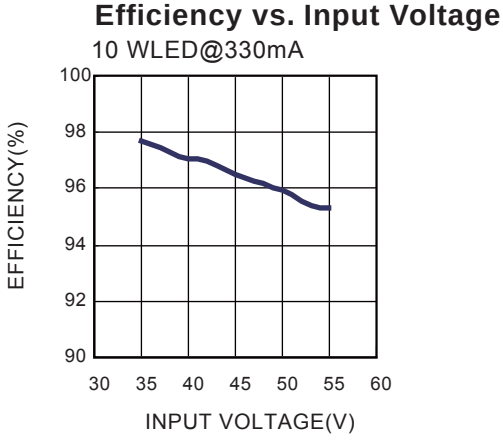

MPS Proprietary Information. Patent Protected. Unauthorized Photocopy and Duplication Prohibited.
© 2011 MPS. All Rights Reserved.

ORDERING INFORMATION

Part Number	Package	Top Marking	Free Air Temperature (T_A)
MP2488DQ*	QFN10(3x3mm)	7G	–40°C to +85°C
MP2488DN**	SOIC8E	MP2488DN	–40°C to +85°C

*For Tape & Reel, add suffix –Z (eg. MP2488DQ–Z);
For RoHS compliant packaging, add suffix –LF (eg. MP2488DQ–LF–Z)
**For Tape & Reel, add suffix –Z (eg. MP2488 DN–Z);
For RoHS compliant packaging, add suffix –LF (eg. MP2488 DN–LF–Z)

PACKAGE REFERENCE

TOP VIEW

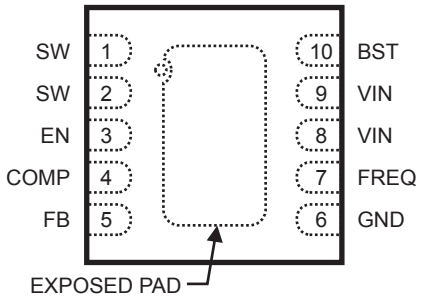

QFN10(3x3mm)

TOP VIEW

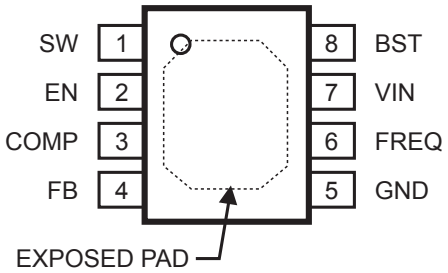

SOIC8E

ABSOLUTE MAXIMUM RATINGS (1)

Supply Voltage (V_{IN}).....–0.3V to +60V
Switch Voltage (V_{SW}).....–0.5V to V_{IN} + 0.5V
BST to SW .....–0.3V to +5V
All Other Pins.....–0.3V to +5V
Junction Temperature.....150°C
Lead Temperature .....260°C
Storage Temperature..... –65°C to +150°C
Continuous Power Dissipation (T_A=+25°C)(2)
QFN10(3x3mm) 2.5W
SOIC8 (Exposed Pad) 2.5W

Recommended Operating Conditions (3)

Supply Voltage V_{IN} .....4.5V to 55V
Maximum Junction Temp. (T_J)..... +125°C

Thermal Resistance (4) θ_{JA} θ_{JC}

QFN10(3x3mm).....50..... 12... °C/W
SOIC8 (Exposed Pad).....50..... 10... °C/W

Notes:

1) Exceeding these ratings may damage the device.
2) The maximum allowable power dissipation is a function of the maximum junction temperature T_J(MAX), the junction-to-ambient thermal resistance θ_{JA}, and the ambient temperature T_A. The maximum allowable continuous power dissipation at any ambient temperature is calculated by P_D(MAX)=(T_J(MAX)-T_A)/ θ_{JA}. Exceeding the maximum allowable power dissipation will cause excessive die temperature, and the regulator will go into thermal shutdown. Internal thermal shutdown circuitry protects the device from permanent damage.
3) The device is not guaranteed to function outside of its operating conditions.
4) Measured on JESD51-7 4-layer board.

MPS Proprietary Information. Patent Protected. Unauthorized Photocopy and Duplication Prohibited.
© 2011 MPS. All Rights Reserved.

ELECTRICAL CHARACTERISTICS

V_{IN} = 12V, V_{EN} = 2.5V, V_{COMP} = 1.4V, T_A= +25°C, unless otherwise noted.
Specifications over temperature are guaranteed by design and characterization.

Parameter	Symbol	Condition	Min	Typ	Max	Units
Feedback Voltage	V_{FB}	4.5V < V_{IN} < 55V	188	200	212	mV
Upper Switch On Resistance (5)	$R_{DS(ON)}$	V_{BST} – V_{SW} = 5V		220		mΩ
Upper Switch Leakage		V_{EN} = 0V, V_{SW} = 0V		0.1		μA
Current Limit			2.6	3.2		A
Error Amp Voltage Gain	A_{VEA}			400		V/V
Error Amp Transconductance	G_{EA}	I_{COMP} = ±3μA		350		μA/V
Error Amp Min Source current		V_{FB} = 175mV		10		μA
Error Amp Min Sink current		V_{FB} = 225mV		-10		μA
VIN UVLO Threshold		V_{IN} rising	2.7	3.0	3.3	V
VIN UVLO Hysteresis				0.4		V
Soft-Start Time (5)		20mV < V_{FB} < 190mV		0.18		ms
Oscillator Frequency	f_s	R_{FREQ} = 495kΩ	150	200	250	kHz
Minimum Switch On Time (5)				100		ns
Shutdown Supply Current		V_{EN} < 0.3V		12	25	μA
Quiescent Supply Current		No load, V_{FB} = 240mV		130		μA
Thermal Shutdown		Hysteresis = 20°C		150		°C
Minimum Off Time (5)				100		ns
Minimum On Time (5)				100		ns
EN Up Threshold			1.3	1.5	1.7	V
EN Threshold Hysteresis				300		mV

Note:
5) Guaranteed by design.

MPS Proprietary Information. Patent Protected. Unauthorized Photocopy and Duplication Prohibited.
© 2011 MPS. All Rights Reserved.

PIN FUNCTIONS

QFN Pin #	SOIC8 Pin #	Name	Description
1, 2	1	SW	Switch Node. This is the output from the high-side switch. A low V_F Schottky rectifier to ground is required. The rectifier must be close to the SW pins to reduce switching spikes.
3	2	EN	Enable Input. Pulling this pin below the specified threshold shuts the chip down. Pulling it up above the specified threshold or leaving it floating enables the chip.
4	3	COMP	Compensation. This node is the output of the GM error amplifier. Control loop frequency compensation is applied to this pin.
5	4	FB	Feedback. This is the input to the error amplifier. An external current sensing resistor is connected in series with the LEDs to GND. The feedback voltage is connected to this pin and is compared to the internal +200mV reference to set the regulation current.
6	5	GND, Exposed pad	Ground. It should be connected as close as possible to the output capacitor avoiding the high current switch paths. Connect exposed pad to GND plane for optimal thermal performance.
7	6	FREQ	Switching Frequency Program Input. Connect a resistor from this pin to ground to set the switching frequency.
8, 9	7	VIN	Input Supply. This supplies power to all the internal control circuitry, both BS regulators and the high-side switch. A decoupling capacitor to ground must be placed close to this pin to minimize the switching spikes.
10	8	BST	Bootstrap. This is the positive power supply for the internal floating high-side MOSFET driver. Connect a bypass capacitor between this pin and SW pin.

MPS Proprietary Information. Patent Protected. Unauthorized Photocopy and Duplication Prohibited.
© 2011 MPS. All Rights Reserved.

TYPICAL PERFORMANCE CHARACTERISTICS

V_{IN}=44V, I_{LED}=330mA, 10 WLED series, unless otherwise noted.

Steady State Operation

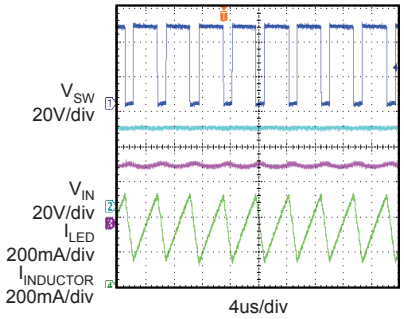

PWM Dimming

f_{PWM}=200Hz,D_{PWM}=50%

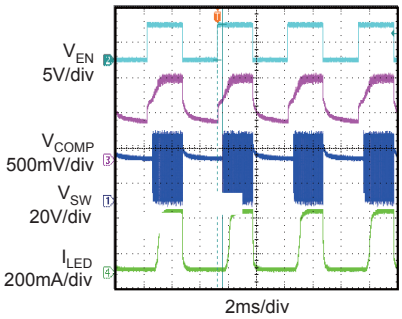

EN Start Up

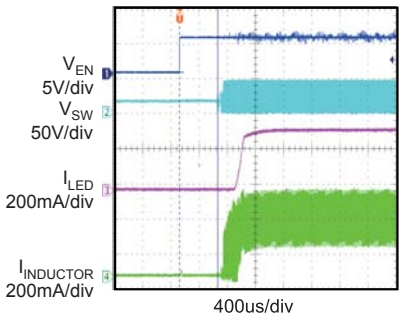

EN Shutdown

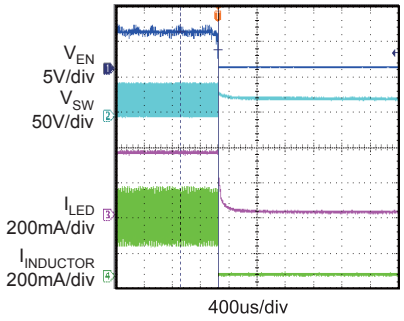

Efficiency vs. Input Voltage

10 WLED@330mA

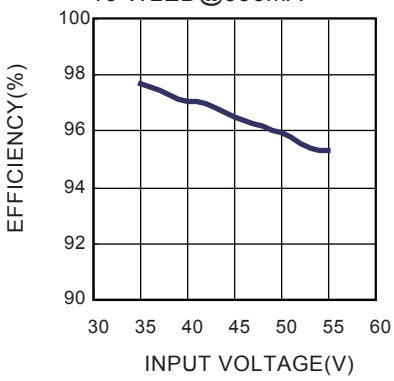

MPS Proprietary Information. Patent Protected. Unauthorized Photocopy and Duplication Prohibited.
© 2011 MPS. All Rights Reserved.

BLOCK DIAGRAM

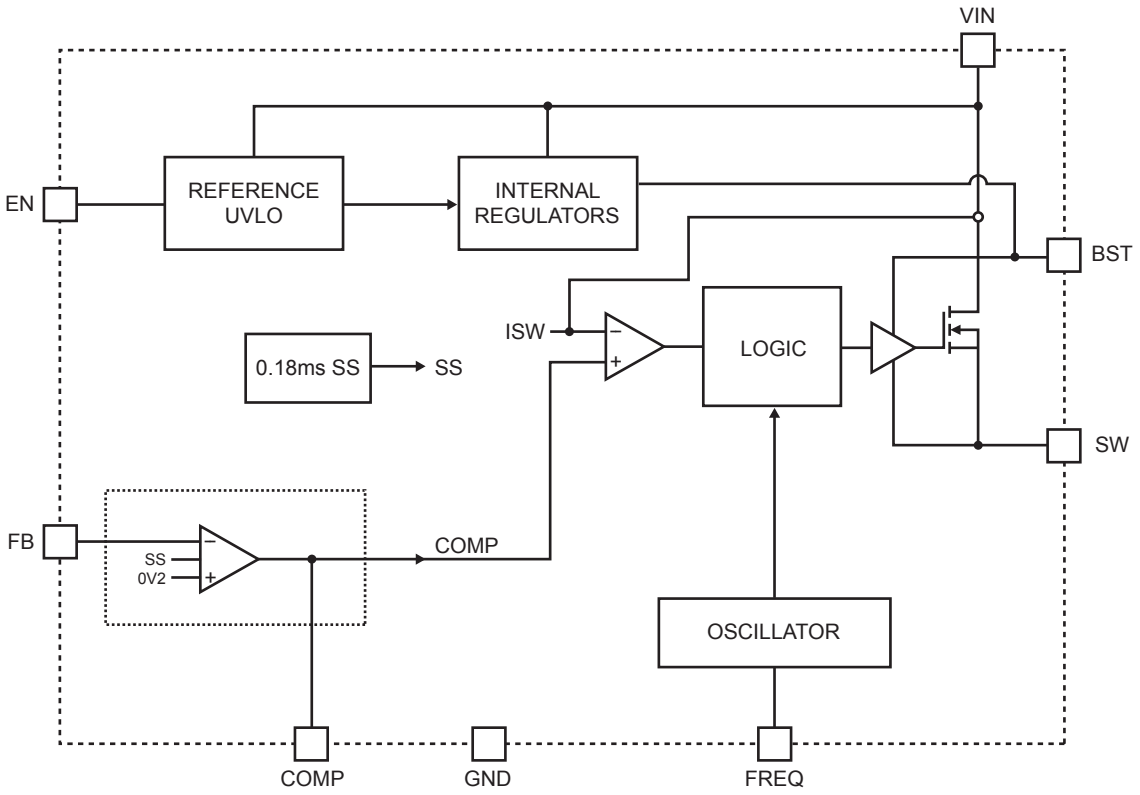

Figure 1—Functional Block Diagram

MPS Proprietary Information. Patent Protected. Unauthorized Photocopy and Duplication Prohibited.
© 2011 MPS. All Rights Reserved.

OPERATION

PWM Control Mode

MP2488 operates in a fixed frequency, peak current control mode to regulate the LED current. A PWM cycle is initiated by the internal clock. The power MOSFET is turned on and remains on until its current reaches the value set by the COMP voltage. When the power switch is off, it remains off for at least 100ns before the next cycle starts. In one PWM period, the current in the power MOSFET does not reach the COMP set current value, the power MOSFET remains on, saving a turn-off operation.

Error Amplifier

The error amplifier compares the FB pin voltage with the internal reference (REF) and outputs a current proportional to the difference between the two. This output current is then used to charge the external compensation network to form the COMP voltage, which is used to control the power MOSFET current.

During operation, the minimum COMP voltage is clamped to 0.9V and its maximum is clamped to 2.0V. COMP is internally pulled down to GND in shutdown mode. COMP should not be pulled up beyond 2.6V.

Internal Regulator

Most of the internal circuitries are powered from the 2.6V internal regulator. This regulator takes the VIN input and operates in the full VIN range. When VIN is greater than 3.0V, the output of the regulator is in full regulation. When VIN is lower than 3.0V, the output decreases.

Enable Control

The MP2488 has a dedicated enable control pin (EN). With high enough input voltage, the chip can be enabled and disabled by EN which has positive logic. Its falling threshold is a precision 1.2V, and its rising threshold is 1.5V (300mV higher).

When floating, EN is pulled up to about 3.0V by an internal 1μA current source so it is enabled. To pull it down, 1μA current capability is needed.

When EN is pulled down below 1.2V, the chip is put into the lowest shutdown current mode. When EN is higher than zero but lower than its rising threshold, the chip is still in shutdown mode but the shutdown current increases slightly.

Under-Voltage Lockout (UVLO)

Under-voltage lockout (UVLO) is implemented to protect the chip from operating at insufficient supply voltage. The UVLO rising threshold is about 3.0V while its falling threshold is a consistent 2.6V.

Internal Soft-Start

The soft-start is implemented to prevent the LED current from overshooting during startup and short circuit recovery. When the chip starts, the internal circuitry generates a soft-start voltage (SS) ramping up from 0V to 2.6V. When it is lower than the internal reference (REF), SS overrides REF so the error amplifier uses SS as the reference. When SS is higher than REF, REF regains control.

Thermal Shutdown

Thermal shutdown is implemented to prevent the chip from operating at exceedingly high temperatures. When the silicon die temperature is higher than its upper threshold, it shuts down the whole chip. When the temperature is lower than its lower threshold, the chip is enabled again.

Floating Driver and Bootstrap Charging

The floating power MOSFET driver is powered by an external bootstrap capacitor. This floating driver has its own UVLO protection. This UVLO's rising threshold is 2.2V with a threshold of 150mV. The driver's UVLO is soft-start related. In case the bootstrap voltage hits its UVLO, the soft-start circuit is reset. To prevent noise, there is 20μs delay before the reset action. When bootstrap UVLO is gone, the reset is off and then soft-start process resumes.

The bootstrap capacitor is charged and regulated to about 4V by the dedicated internal bootstrap regulator. When the voltage between the BST and SW nodes is lower than its regulation, a PMOS pass transistor connected from VIN to BST is turned on. The charging current path is from VIN, BST and then to SW. External circuit should provide enough voltage headroom to facilitate the charging.

MPS Proprietary Information. Patent Protected. Unauthorized Photocopy and Duplication Prohibited.
© 2011 MPS. All Rights Reserved.

As long as VIN is sufficiently higher than SW, the bootstrap capacitor can be charged. When the power MOSFET is ON, VIN is about equal to SW so the bootstrap capacitor cannot be charged. When the external diode is on, the difference between VIN and SW is largest, thus making it the best period to charge. When there is no current in the inductor, SW equals the output voltage V_{OUT} so the difference between V_{IN} and V_{OUT} can be used to charge the bootstrap capacitor.

At higher duty cycle operation condition, the time period available to the bootstrap charging is less so the bootstrap capacitor may not be sufficiently charged.

In case the internal circuit does not have sufficient voltage and the bootstrap capacitor is not charged, extra external circuitry can be used to ensure the bootstrap voltage is in the normal operational region. Refer to *External Bootstrap Diode* in Application section.

Current Comparator and Current Limit

The power MOSFET current is accurately sensed via a current sense MOSFET. It is then fed to the high speed current comparator for the current mode control purpose. The current comparator takes this sensed current as one of its inputs. When the power MOSFET is turned on, the comparator is first blanked till the end of the turn-on transition to avoid noise issues. The comparator then compares the power switch current with the COMP voltage. When the sensed current is higher than the COMP voltage, the comparator output is low, turning off the power MOSFET. The cycle-by-cycle maximum current of the internal power MOSFET is internally limited.

Startup and Shutdown

If both VIN and EN are higher than their appropriate thresholds, the chip starts. The reference block starts first, generating stable reference voltage and currents, and then the internal regulator is enabled. The regulator provides stable supply for the remaining circuitries.

While the internal supply rail is up, an internal timer holds the power MOSFET OFF for about 50μs to blank the startup glitches. When the internal soft-start block is enabled, it first holds its SS output low to ensure the remaining circuitries are ready and then slowly ramps up.

Three events can shut down the chip: EN low, VIN low and thermal shutdown. In the shutdown procedure, power MOSFET is turned off first to avoid any fault triggering. The COMP voltage and the internal supply rail are then pulled down.

Programmable Oscillator

The MP2488 oscillating frequency is set by an external resistor, R_{FREQ} from the FREQ pin to ground. The value of R_{FREQ} can be calculated from:

$$R_{FREQ}(K\Omega) = \frac{100000}{f_S(KHz)} - 5$$

To get f_S=200kHz, R_{FREQ}=495kΩ.

A ceramic capacitor C_{FREQ} should be Parallel to R_{FREQ} to decouple the noise, 1nF is enough for most applications.

MPS Proprietary Information. Patent Protected. Unauthorized Photocopy and Duplication Prohibited.
© 2011 MPS. All Rights Reserved.

APPLICATION INFORMATION

COMPONENT SELECTION

Setting the LED Current

The LED current is set using a sensing resistor, which is in series with the LEDs and connected to GND. The voltage on the sensing resistor is connected to FB pin.

$$I_{LED} = \frac{V_{FB}}{R_{FB}}$$

For example, for a 700mA LED current, R_{FB} is 287mΩ.

Inductor L1

The inductor is required to supply constant current to the output load while being driven by the switched input voltage. A larger value inductor will help to reduce the output filter capacitance for the same LED current ripple. However, the larger value inductor will have a larger physical size, higher series resistance, and/or lower saturation current.

A good rule for determining the inductance to use is to allow the peak-to-peak ripple current in the inductor to be approximately 30% to 40% of the LED current. Also, make sure that the peak inductor current is below the maximum switch current limit. The inductance value can be calculated by:

$$L1 = \frac{V_{OUT}}{f_s \times \Delta I_L} \times (1 - \frac{V_{OUT}}{V_{IN}}),$$

$$V_{OUT} = n \times V_F$$

Where V_{OUT} is the output voltage to drive the LEDs, V_{IN} is the input voltage, f_S is the switching frequency, V_F is one LED diode forward voltage drop, n is the numbers of LEDs in series, and ΔI_L is the peak-to-peak inductor ripple current.

Choose an inductor that will not saturate under the maximum inductor peak current. The peak inductor current can be calculated by:

$$I_{LP} = I_{LED} + \frac{V_{OUT}}{2 \times f_s \times L1} \times (1 - \frac{V_{OUT}}{V_{IN}})$$

Where I_{LED} is the LED current.

Output Rectifier Diode

The output rectifier diode supplies the current to the inductor when the high-side switch is off. To reduce losses due to the diode forward voltage and recovery times, use a Schottky diode.

Choose a diode whose maximum reverse voltage rating is greater than the maximum input voltage, and whose current rating is greater than the maximum load current. Table 2 lists example Schottky diodes and manufacturers.

Table 1—Diode Selection Guide

Diodes	Voltage/ Current Rating	Manufacturer
B280-13-F	80V, 2A	Diodes Inc.
B380-13-F	80V, 3A	Diodes Inc.
CMSH2-100M	100V, 2A	Central Semi
CMSH3-100MA	100V, 3A	Central Semi

Input Capacitor C_{IN}

The input current to the step-down converter is discontinuous, therefore a capacitor is required to supply the AC current to the step-down converter while maintaining the DC input voltage. Use low ESR capacitors for the best performance. Ceramic capacitors are preferred, but tantalum or low-ESR electrolytic capacitors may also suffice.

For simplification, choose the input capacitor with RMS current rating greater than half of the maximum load current. The input capacitor (C1) can be electrolytic, tantalum or ceramic.

When using electrolytic or tantalum capacitors, a small, high quality ceramic capacitor, i.e. 0.1μF, should be placed as close to the IC as possible. When using ceramic capacitors, make sure that they have enough capacitance to provide sufficient charge to prevent excessive voltage ripple at input. The input voltage ripple caused by capacitance can be estimated by:

$$\Delta V_{IN} = \frac{I_{LED}}{f_s \times C_{IN}} \times \frac{V_{OUT}}{V_{IN}} \times \left(1 - \frac{V_{OUT}}{V_{IN}}\right)$$

MPS Proprietary Information. Patent Protected. Unauthorized Photocopy and Duplication Prohibited.
© 2011 MPS. All Rights Reserved.

Output Capacitor C_{OUT}

The output capacitor (C_{OUT}) is required to reduce the LED current ripple. Ceramic, tantalum, or low ESR electrolytic capacitors are recommended. Low ESR capacitors are preferred to keep the output voltage ripple low so that the AC ripple current through the LEDs is small. The output voltage ripple can be estimated by:

$$\Delta V_{OUT} = \frac{V_{OUT}}{8 \times f_S^2 \times L1 \times C_{OUT}} \times \left(1 - \frac{V_{OUT}}{V_{IN}}\right)$$

For most application, a 2.2uF~4.7uF ceramic capacitor is recommended.

Compensation Components

MP2488 employs current mode control for easy compensation and fast transient response. The system stability and transient response are controlled through the COMP pin. COMP pin is the output of the internal error amplifier. A series capacitor-resistor combination (R_{COM} and C_{COM1}) sets a pole-zero combination to control the characteristics of the control system. The DC gain of the current feedback loop is given by:

$$A_{VDC} = R_{FB} \times G_{CS} \times A_{VEA}$$

Where A_{VEA} is the error amplifier voltage gain, 400V/V; G_{CS} is the current sense transconductance, 8A/V; R_{FB} is the current sensing resistor value.

The system has two poles of importance. One is due to the compensation capacitor (C_{COM1}) and the output resistor of error amplifier (R_{EA}=A_{VEA}/G_{EA}). G_{EA} is the error amplifier transconductance, 500μA/V. The other is due to the output capacitor and the LEDs' AC resistor (R_{LED}=ΔV_{OUT}/ΔI_{LED}). These poles are located at:

$$f_{P1} = \frac{1}{2\pi \times C_{COM1} \times R_{EA}}$$

$$f_{P2} = \frac{1}{2\pi \times C_{OUT} \times R_{LED}}$$

The system has one zero of importance, due to the compensation capacitor (C_{COM1}) and the compensation resistor (R_{COM}). This zero is located at:

$$f_{Z1} = \frac{1}{2\pi \times C_{COM1} \times R_{COM}}$$

The system may have another zero of importance, if the output capacitor has a large capacitance and/or a high ESR value. The zero, due to the ESR and capacitance of the output capacitor, is located at:

$$f_{ESR} = \frac{1}{2\pi \times C_{OUT} \times R_{ESR}}$$

In this case, a third pole set by the compensation capacitor (C_{COM2}) and the compensation resistor (R_{COM}) is used to compensate the effect of the ESR zero on the loop gain. This pole is located at:

$$f_{P3} = \frac{1}{2\pi \times C_{COM2} \times R_{COM}}$$

The goal of compensation design is to shape the converter transfer function to get a desired loop gain and phase margin. The system crossover frequency where the feedback loop has the unity gain is important. Lower crossover frequencies result in slower line and load transient responses, while higher crossover frequencies could cause system unstable. A good rule of thumb is to set the crossover frequency to approximately one-tenth of the switching frequency. To optimize the compensation components for conditions, the following procedure can be used.

1. Choose the compensation resistor (R_{COM}) to set the desired crossover frequency. Determine the R_{COM} value by the following equation:

$$R_{COM} = \frac{2\pi \times C_{OUT} \times R_{LED} \times f_C}{R_{FB} \times G_{EA} \times G_{CS}}$$

Where f_C is the desired crossover frequency.

2. Choose the compensation capacitor (C_{COM1}) to achieve the desired phase margin. For applications with typical inductor values, setting the compensation zero, f_{Z1}, below one forth of the crossover frequency provides sufficient phase margin. Determine the C_{COM1} value by the following equation:

$$C_{COM1} > \frac{4}{2\pi \times R_{COM} \times f_C}$$

MPS Proprietary Information. Patent Protected. Unauthorized Photocopy and Duplication Prohibited.
© 2011 MPS. All Rights Reserved.

3. Determine if the second compensation capacitor (C_{COM2}) is required, which is connected from COMP pin to GND. It is required if the ESR zero of the output capacitor is located at less than half of the switching frequency:

$$\frac{1}{2\pi \times C_{OUT} \times R_{ESR}} < \frac{f_S}{2}$$

If this is the case, then add the second compensation capacitor (C_{COM2}) to set the pole f_{P3} at the location of the ESR zero. Determine the C_{COM2} value by the equation:

$$C_{COM2} = \frac{C_{OUT} \times R_{ESR}}{R_{COM}}$$

External Bootstrap Diode

An external bootstrap diode may enhance the efficiency of the regulator. In below cases, an external BST diode is recommended from the 5V to BST pin:

- There is a 5V rail available in the system;
- VIN is not greater than 5V;
- VOUT is between 3.3V and 5V;

The bootstrap diode can be a low cost one such as IN4148 or BAT54.

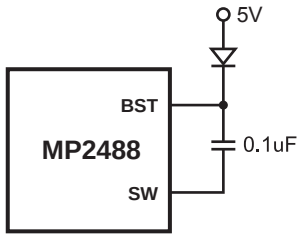

Figure 2—External Bootstrap Diode

MPS Proprietary Information. Patent Protected. Unauthorized Photocopy and Duplication Prohibited.
© 2011 MPS. All Rights Reserved.

TYPICAL APPLICATION CIRCUITS

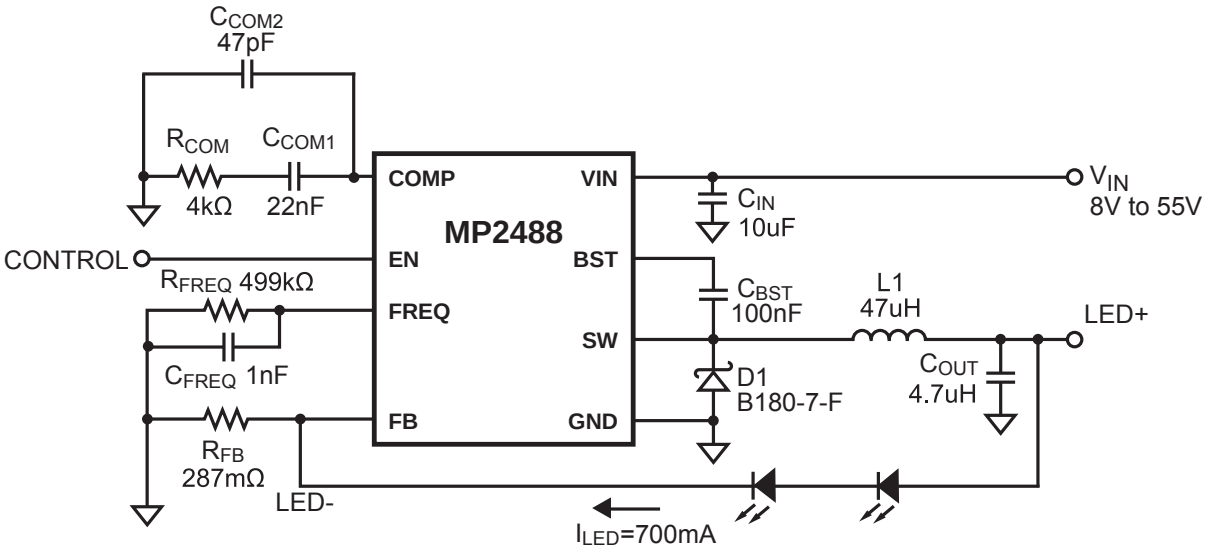

Figure 3—700mA WLED Driver Application

MPS Proprietary Information. Patent Protected. Unauthorized Photocopy and Duplication Prohibited.
© 2011 MPS. All Rights Reserved.

PACKAGE INFORMATION

QFN10 (EXPOSED PAD) (3x3mm)

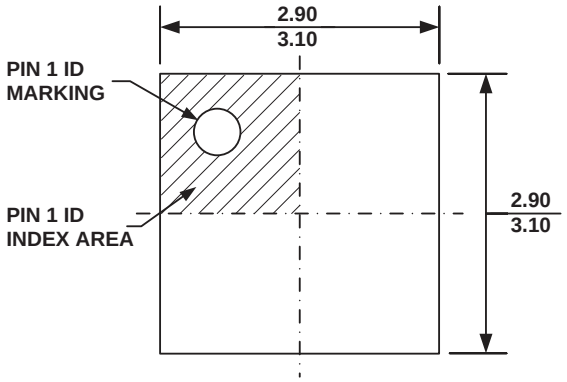

TOP VIEW

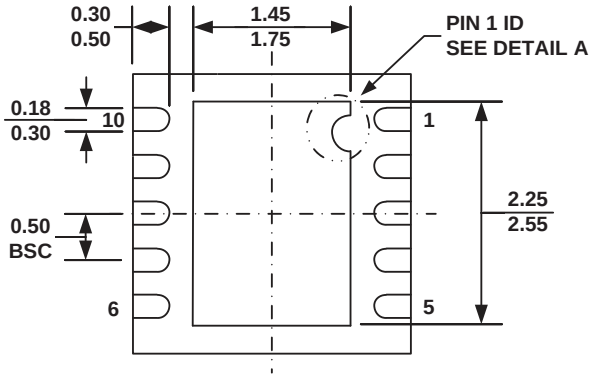

BOTTOM VIEW

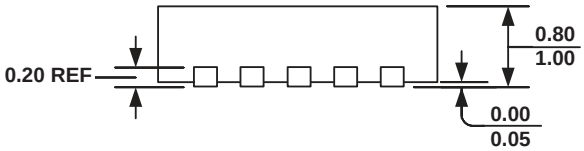

SIDE VIEW

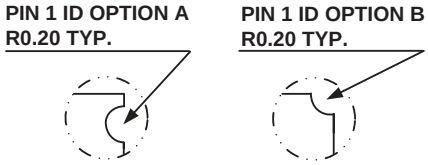

DETAIL A

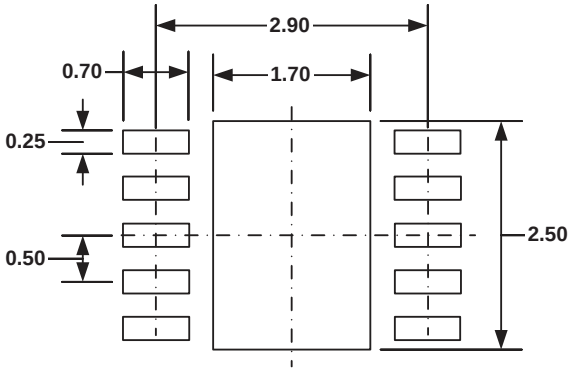

RECOMMENDED LAND PATTERN

NOTE:

1) ALL DIMENSIONS ARE IN MILLIMETERS.
2) EXPOSED PADDLE SIZE DOES NOT INCLUDE MOLD FLASH.
3) LEAD COPLANARITY SHALL BE 0.10 MILLIMETER MAX.
4) DRAWING CONFORMS TO JEDEC MO-229, VARIATION VEED-5.
5) DRAWING IS NOT TO SCALE.

MPS Proprietary Information. Patent Protected. Unauthorized Photocopy and Duplication Prohibited.
© 2011 MPS. All Rights Reserved.

SOIC8 (EXPOSED PAD)

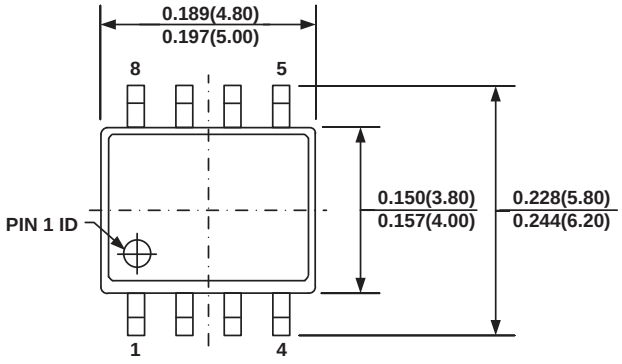

TOP VIEW

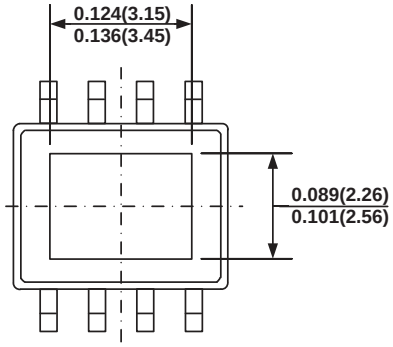

BOTTOM VIEW

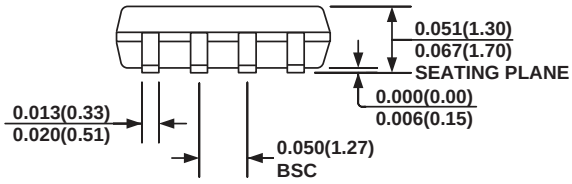

FRONT VIEW

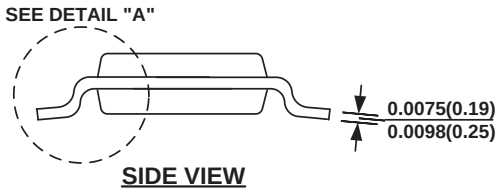

SIDE VIEW

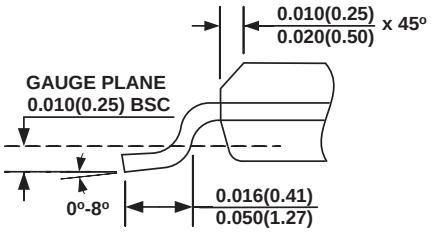

DETAIL "A"

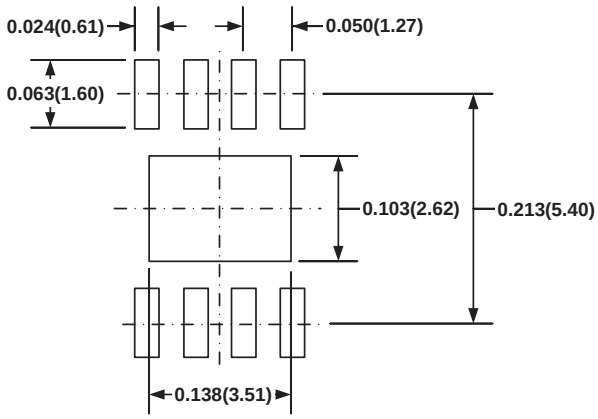

RECOMMENDED LAND PATTERN

NOTE:

1) CONTROL DIMENSION IS IN INCHES. DIMENSION IN BRACKET IS IN MILLIMETERS.
2) PACKAGE LENGTH DOES NOT INCLUDE MOLD FLASH, PROTRUSIONS OR GATE BURRS.
3) PACKAGE WIDTH DOES NOT INCLUDE INTERLEAD FLASH OR PROTRUSIONS.
4) LEAD COPLANARITY (BOTTOM OF LEADS AFTER FORMING) SHALL BE 0.004" INCHES MAX.
5) DRAWING CONFORMS TO JEDEC MS-012, VARIATION BA.
6) DRAWING IS NOT TO SCALE.

NOTICE: The information in this document is subject to change without notice. Users should warrant and guarantee that third party Intellectual Property rights are not infringed upon when integrating MPS products into any application. MPS will not assume any legal responsibility for any said applications.

MPS Proprietary Information. Patent Protected. Unauthorized Photocopy and Duplication Prohibited.
© 2011 MPS. All Rights Reserved.