MP2013

40V, 150mA, Low Quiescent Current Linear Regulator

DESCRIPTION

The MP2013 is a low power linear regulator that supplies power to systems with high voltage batteries. It includes a wide 2.5V to 40V input range, low dropout voltage and low quiescent supply current. The low quiescent current and low dropout voltage allow operations at extremely low power levels. Therefore, the MP2013 are ideal for the low power microcontrollers and the battery-powered equipments.

The MP2013 provides wide variety of fixed output voltage options (if request): 1.8V, 1.9V, 2.3V, 2.5V, 3.0V, 3.3V, 3.45V, 5.0V; and also provides the output adjustable option (from 1.215V to 15V).

The regulator output current is internally limited and the device is protected against over-load and over-temperature conditions.

The MP2013 also includes thermal shutdown and current limiting fault protection, and is available in QFN6 (2x2mm), QFN8 (3x3mm) and TSOT23-5 packages.

FEATURES

- 2.5V to 40V Input Range
- 3.2μA Quiescent Supply Current
- Stable With low-value output ceramic capacitor (> 0.47 μF)
- 150mA specified current
- 620mV Dropout at 150mA Load
- Available in Fixed and Adjustable output (1.215 V to 15 V) versions
- Output ±2% Accuracy
- Specified current limit
- Thermal Shutdown
- -40°C to +125°C Specified Junction Temperature Range
- Available in TSOT23-5, QFN6 (2x2mm), or QFN8 (3x3mm) Packages

APPLICATIONS

- Industrial/Automotive Applications
- Portable/Battery-Powered Equipment
- Ultra low power Microcontrollers
- Cellular Handsets
- Medical Imaging

All MPS parts are lead-free and adhere to the RoHS directive. For MPS green status, please visit MPS website under Products, Quality Assurance page.

"MPS" and "The Future of Analog IC Technology" are registered trademarks of Monolithic Power Systems, Inc.

TYPICAL APPLICATION

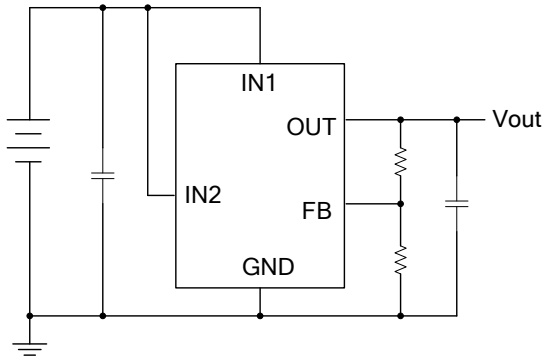

Output Adjustable Version

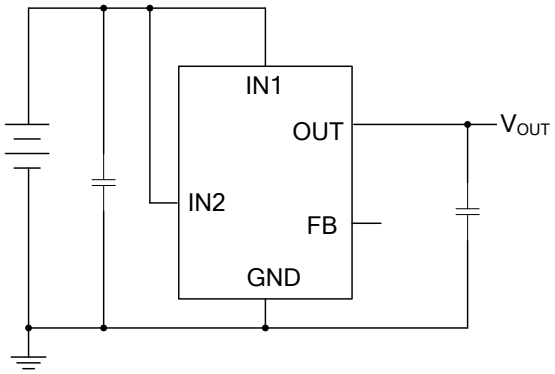

Output Fixed Version

MPS Proprietary Information. Patent Protected. Unauthorized Photocopy and Duplication Prohibited.
© 2014 MPS. All Rights Reserved.

ORDERING INFORMATION

Part Number*	Package	Top Marking
MP2013GJ	TSOT23-5	AFF
MP2013GG	QFN6 (2x2mm)	AX
MP2013GQ	QFN8 (3x3mm)	AFF
MP2013GQ-33	QFN8 (3x3mm)	AGG

* For Tape & Reel, add suffix –Z (e.g. MP2013GJ–Z);

PACKAGE REFERENCE

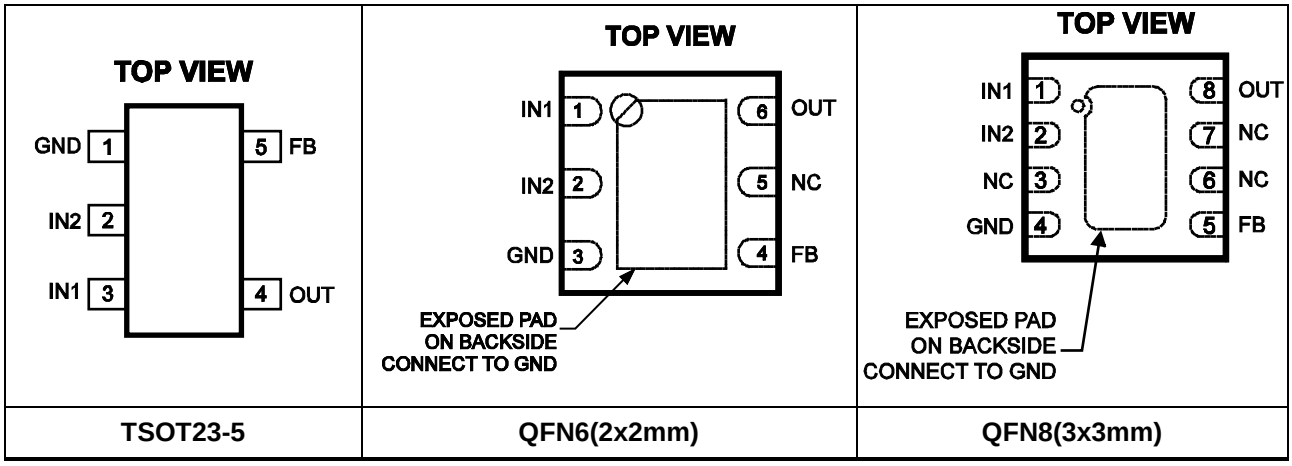

TSOT23-5	QFN6(2x2mm)	QFN8(3x3mm)

ABSOLUTE MAXIMUM RATINGS (1)

IN1, IN2 ..... -0.3V to +42V
OUT ..... -0.3V to +17V
FB ..... -0.3V to +6V
Lead Temperature ..... 260°C
Storage Temperature ..... -65°C to +150°C
Continuous Power Dissipation (T_A = +25°C) (2)
QFN8(3x3mm) 2.08W
QFN6(2x2mm) 1.25W
TSOT23-5 ..... 0.45W

ESD SUSCEPTIBILITY (3)

HBM (Human Body Mode) 2kV
MM (Machine Mode) 200V

Recommended Operating Conditions (4)

Supply Voltage V_{IN} ..... 2.5V to 40V
Output Voltage V_{OUT} ..... 1.215V to 15V
Operating Junction Temp. (T_J). -40°C to +125°C

Thermal Resistance (5)

	θ_{JA}	θ_{JC}	
TSOT23-5	220	110	°C/W
QFN6(2x2mm)	80	16	°C/W
QFN8(3x3mm)	48	11	°C/W

Notes:

1) Exceeding these ratings may damage the device.
2) The maximum allowable power dissipation is a function of the maximum junction temperature T_J (MAX), the junction-to-ambient thermal resistance θ_{JA}, and the ambient temperature T_A. The maximum allowable continuous power dissipation at any ambient temperature is calculated by P_D (MAX) = (T_J (MAX)-T_A)/θ_{JA}. Exceeding the maximum allowable power dissipation will cause excessive die temperature, and the regulator will go into thermal shutdown. Internal thermal shutdown circuitry protects the device from permanent damage.
3) Devices are ESD sensitive. Handling precaution recommended.
4) The device is not guaranteed to function outside of its operating conditions.
5) Measured on JESD51-7, 4-layer PCB.

MPS Proprietary Information. Patent Protected. Unauthorized Photocopy and Duplication Prohibited.
© 2014 MPS. All Rights Reserved.

ELECTRICAL CHARACTERISTICS

$V_{OUT(NOM)}$ = 5V (V_{IN}≥6V) or FB (V_{IN}<6V), I_{OUT} = 1mA, C_{OUT} = 1µF, T_J = 25°C, unless otherwise noted.

Parameter	Symbol	Condition		Min	Typ	Max	Units
Input Voltage	V_{IN}			2.5		40	V
Output Voltage range	V_{OUT}			1.215		15	V
GND Pin Current	I_{GND}	MP2013	0<I_{OUT}<1mA, VIN=2.5V to 40V		3.2	7.2	µA
			1mA<I_{OUT}<30mA, VIN=2.5V to 15V		14	18	
			30mA<I_{OUT}<150mA, VIN=3V to 6V		35	50	
		MP2013-33	0<I_{OUT}<1mA, VIN=4.3V to 40V		4.4	8	
			1mA<I_{OUT}<30mA, VIN=4.3V to 15V		15	19	
			30mA<I_{OUT}<150mA, VIN=4.3V		35	50	
Load Current Limit	I_{LIMIT}	V_{OUT} = 0V, VIN=6V to 15V		180	270	400	mA
Output Voltage Accuracy		MP2013-33, VIN=4.3V, I_O=0		3.234	3.3	3.366	V
FB Voltage	V_{FB}	FB = OUT, VIN=5V		1.191	1.215	1.239	V
Dropout Voltage V_{IN}=$V_{OUT(NOM)}$-0.1V	$V_{DROPOUT}$	MP2013, I_{LOAD} = 150mA, $V_{OUT(NOM)}$=5V			620	900	mV
		MP2013-33, I_{LOAD} = 150mA			740	900	
FB Pin Input Current	I_{FB}	MP2013, V_{FB} = 1.3V, VIN=6V,OUT floating		–50	+4	+50	nA
		MP2013-33,V_{FB} = 1.3V, VIN=6V,OUT floating		0.98	1.25	1.52	µA
Line Regulation(6)		V_{IN} = 2.5 to 40V, I_{LOAD} = 1mA, OUT = FB			0.01	0.05	%/V
Load Regulation(7)		MP2013, I_{LOAD} = 100µA to 150mA, OUT = FB, VIN=3V to 6V			0.003	0.005	%/mA
		MP2013-33, I_{LOAD} = 100µA to 150mA, VIN=4.3V to 6V			0.005	0.01	
Output Voltage PSRR(8)		100Hz, C_{IN} = 100pF, C_{OUT} = 4.7µF I_{LOAD}=10mA, V_{IN} = 6V			58		dB
		1kHz, C_{IN} = 100pF, C_{OUT} = 4.7µF I_{LOAD}=10mA, V_{IN} = 6V			41		dB
		100kHz,C_{IN} = 100pF, C_{OUT} = 4.7µF I_{LOAD}=10mA, V_{IN} = 6V			55		dB

MPS Proprietary Information. Patent Protected. Unauthorized Photocopy and Duplication Prohibited.
© 2014 MPS. All Rights Reserved.

ELECTRICAL CHARACTERISTICS *(continued)*

$V_{OUT(NOM)}$ = 5V (V_{IN}≥6V) or FB (V_{IN}<6V), I_{OUT} = 1mA, C_{OUT} = 1µF, T_J = 25°C, unless otherwise noted.

Parameter	Symbol	Condition	Min	Typ	Max	Units
Startup Response Time		R_{LOAD}=500Ω, C_{OUT}=6.8µF, V_{OUT} = 5V			2.5	ms
Thermal Shutdown(8)	T_{SD}		150	165		°C
Thermal Shutdown Hysteresis(8)	ΔT_{SD}			20		°C

Notes:

6) Line Regulation= $\frac{|V_{OUT[V_{IN(MAX)}]} - V_{OUT[V_{IN(MIN)}]}|}{(V_{IN(MAX)} - V_{IN(MIN)}) \times V_{OUT(NOM)}} \times (\%/V)$

7) Load Regulation= $\frac{|V_{OUT[I_{OUT(MAX)}]} - V_{OUT[I_{OUT(MIN)}]}|}{(I_{OUT(MAX)} - I_{OUT(MIN)}) \times V_{OUT(NOM)}} \times (\%/mA)$

8) Derived from bench characterization. Not tested in production.

MPS Proprietary Information. Patent Protected. Unauthorized Photocopy and Duplication Prohibited.
© 2014 MPS. All Rights Reserved.

PIN FUNCTIONS

Pin #			Name	Description
TSOT23-5	QFN6 (2x2mm)	QFN8 (3x3mm)		
3	1	1	IN1	Input Voltage. Connect a 2.5V to 40V supply to this pin.
2	2	2	IN2	VIN pin to power internal logic. Connect to IN1.
1	3, exposed pad	4, exposed pad	GND	Ground (the exposed pad and GND pin must be connected to the same ground plane)
5	4	5	FB	Feedback input pin, regulated to 1.215V nominally. Connected to an external resistive divider between OUT and GND to set output voltage. For fixed output version, this pin can be just float.
4	6	8	OUT	Regulated output voltage, only low-value ceramic capacitor (≥ 0.47μF) on output is required for stability.
	5	3, 6, 7	NC	No connection. May be left open or tied to Ground for improved thermal performance.

MPS Proprietary Information. Patent Protected. Unauthorized Photocopy and Duplication Prohibited.
© 2014 MPS. All Rights Reserved.

TYPICAL CHARACTERISTICS

Dropout Voltage vs. Junction Temperature

V_{OUT}=5V

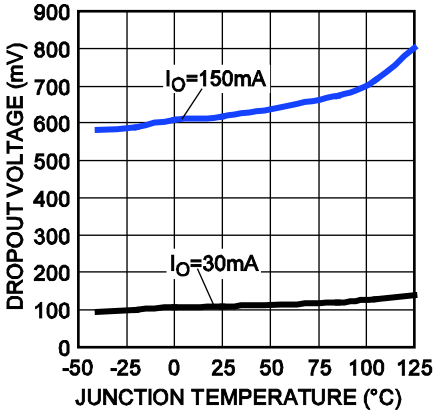

Ground Current vs. Junction Temperature

V_{IN}=6V, V_{OUT}=5V

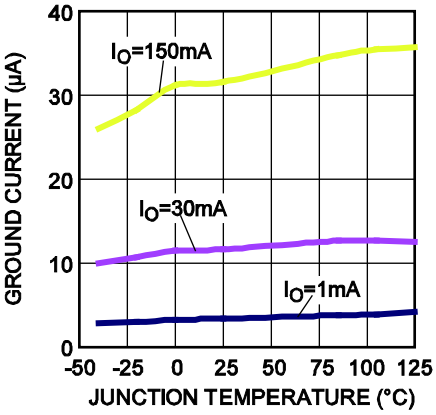

Feedback Voltage vs. Junction Temperature

V_{IN}=6V

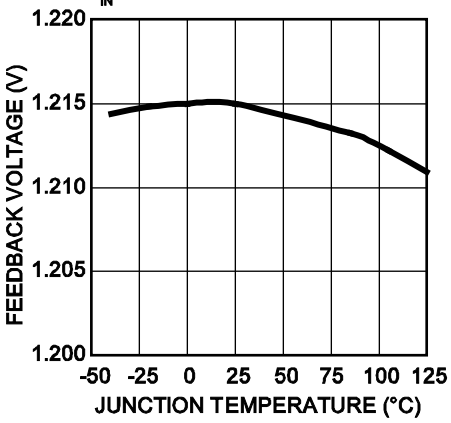

Current Limit vs. Junction Temperature

V_{IN}=6V

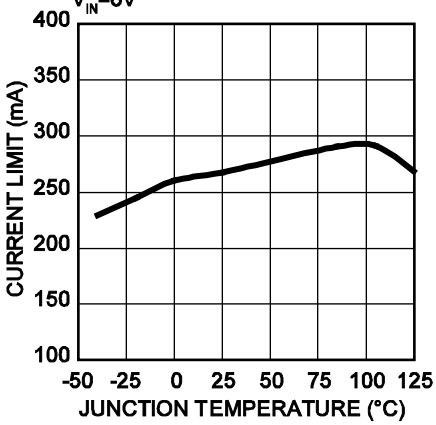

MPS Proprietary Information. Patent Protected. Unauthorized Photocopy and Duplication Prohibited.
© 2014 MPS. All Rights Reserved.

TYPICAL PERFORMANCE CHARACTERISTICS

C_{IN} = 1µF, C_{OUT} = 4.7µF, V_{OUT}=5V, T_A = +25°C, unless otherwise noted

Ground Current vs. Load Current
V_{IN}=6V

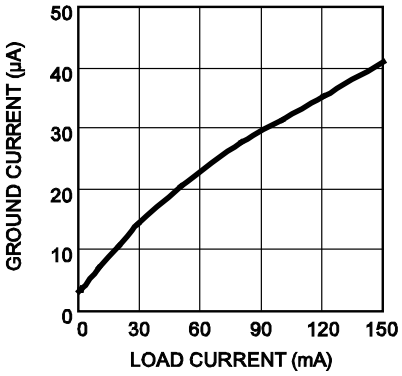

Ground Current vs. V_{IN}
I_O=0mA

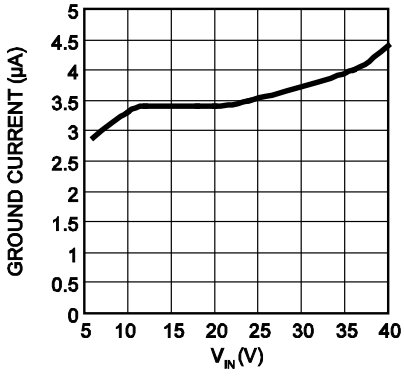

Dropout Voltage vs. Load Current

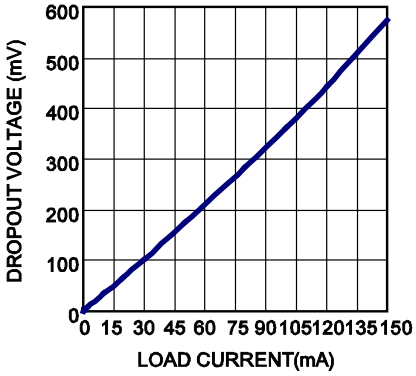

V_{OUT} vs. I_{OUT}
V_{IN}=6V

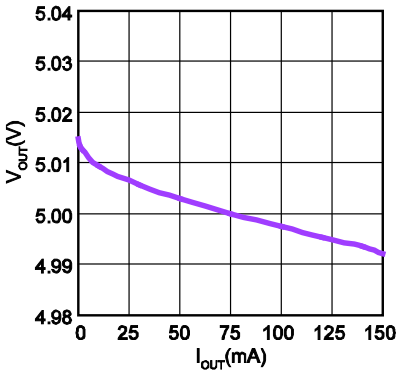

V_{OUT} vs. V_{IN}
V_O=5V

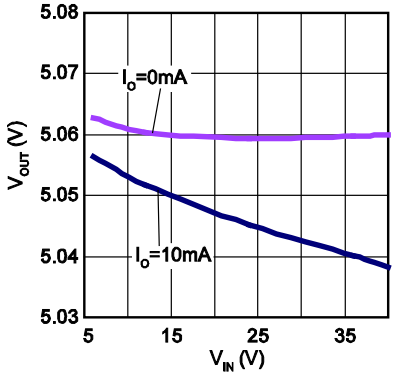

V_{OUT} vs. V_{IN}
V_O=3.3V

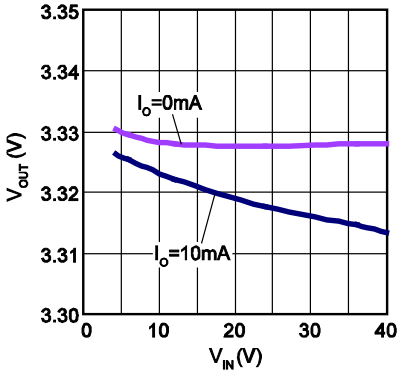

V_{OUT} vs. V_{IN}
V_O=2.5V

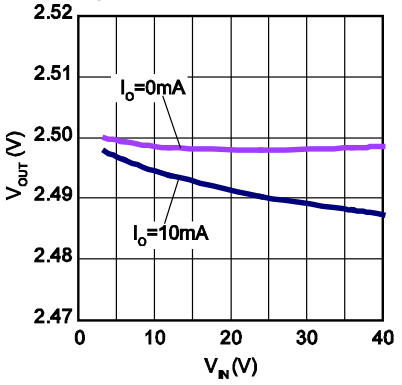

V_{OUT} vs. V_{IN}
V_O=1.8V

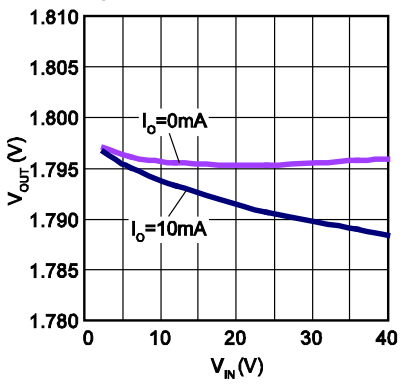

V_{OUT} vs. V_{IN}
V_O=1.215V

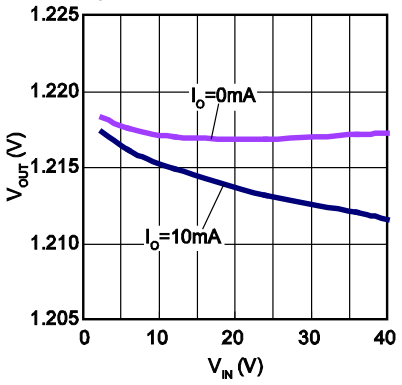

MPS Proprietary Information. Patent Protected. Unauthorized Photocopy and Duplication Prohibited.
© 2014 MPS. All Rights Reserved.

TYPICAL PERFORMANCE CHARACTERISTICS *(continued)*

C_{IN} = 1µF, C_{OUT} = 4.7µF, V_{OUT}=5V, T_A = +25°C, unless otherwise noted

PSRR vs. Frequency
V_{IN1}=V_{IN2}=6V, I_O=10mA, C_{IN}=100pF

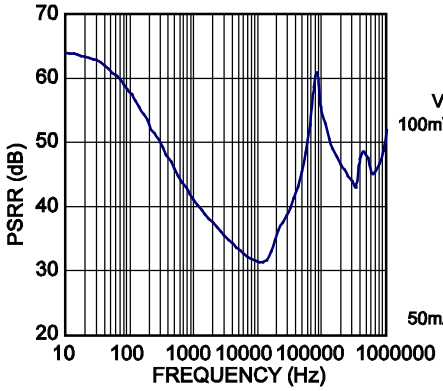

Load Transient
V_{IN} = 12V, I_{OUT} = 8mA-150mA

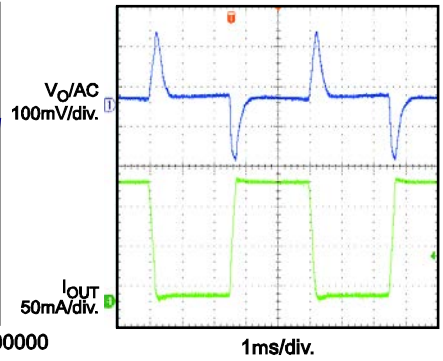

Line Transient
V_{IN} = 6V-7V, I_{OUT} = 150mA

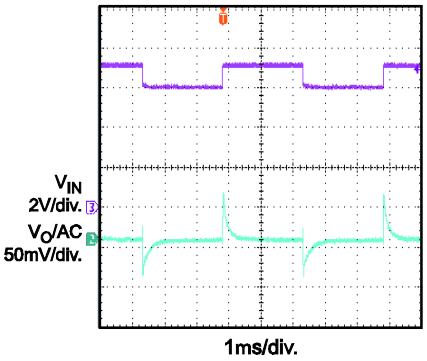

Startup Through V_{IN}
V_{IN} = 12V, I_{OUT} = 150mA

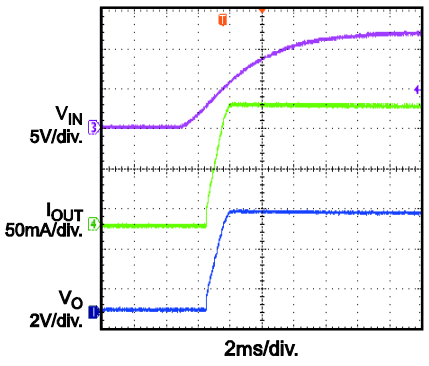

Shutdown Through V_{IN}
V_{IN} = 12V, I_{OUT} = 150mA

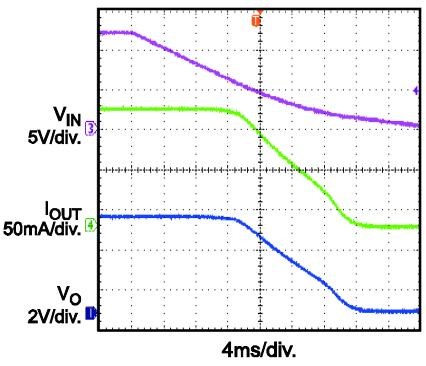

Short Circuit Entry
V_{IN} = 12V, I_{OUT} = 0mA to short circuit

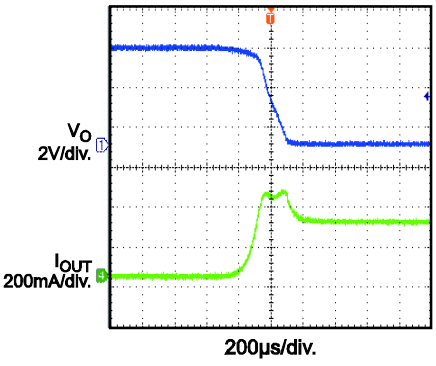

Short Circuit Recovery
V_{IN} = 12V, short circuit to I_{OUT} = 0mA

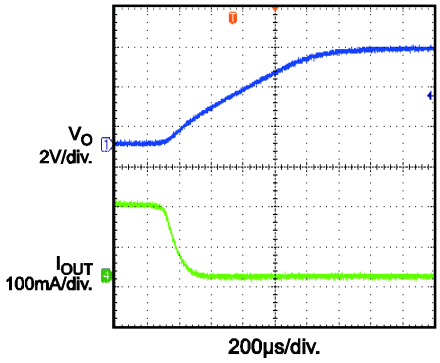

Short Circuit Steady State
V_{IN} = 12V

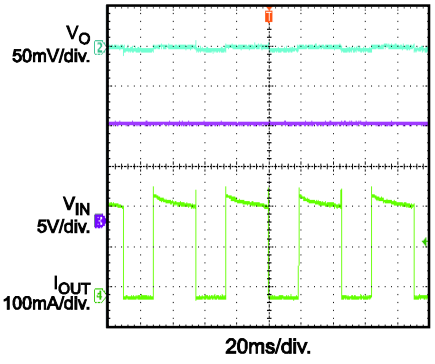

MPS Proprietary Information. Patent Protected. Unauthorized Photocopy and Duplication Prohibited.
© 2014 MPS. All Rights Reserved.

OPERATION

The MP2013 is a linear regulator that supplies power to systems with high voltage batteries. It includes a wide 2.5V to 40V input range, low dropout voltage and low quiescent supply current.

The MP2013 provides wide variety of fixed output voltage options: 1.8V, 1.9V, 2.3V, 2.5V, 3.0V, 3.3V, 3.45V, 5.0V; and also provides the output adjustable option (from 1.215V to 15V).

The output adjustable version has an output that is adjustable from 1.215V to 15V with a simple resistor divider. It uses external feedback, allowing the user to set the output voltage with an external resistor divider. The typical FB pin voltage is 1.215V.

The regulator output current is internally limited and the device is protected against over-load and over-temperature conditions.

The peak output current is limited to around 270mA, which exceeds the 150mA recommended continuous output current.

When the junction temperature is too high, the thermal sensor sends a signal to the control logic that will shutdown the IC. The IC will restart when the temperature has sufficiently cooled.

The maximum power output current is a function of the package's maximum power dissipation for a given temperature.

The maximum power dissipation is dependent on the thermal resistance of the case and the circuit board, the temperature difference between the die junction and the ambient air, and the rate of air flow. The GND pin and Exposed Pad must be connected to the ground plane for proper dissipation.

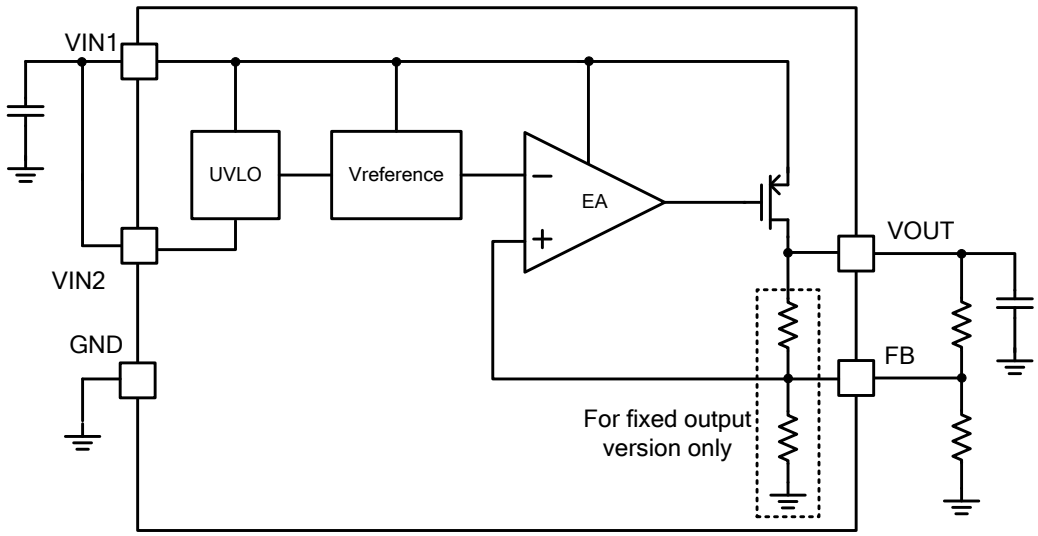

Figure 1: Functional Block Diagram

MPS Proprietary Information. Patent Protected. Unauthorized Photocopy and Duplication Prohibited.
© 2014 MPS. All Rights Reserved.

APPLICATION INFORMATION

COMPONENT SELECTION

Setting the Output Voltage

Set the output voltage of the MP2013 by using a resistor divider as shown:

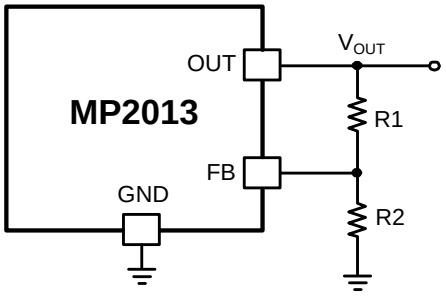

Figure 2: FB Resistor Divider to Set V_{OUT}

Choose R2=1MΩ to maintain a 1.215μA minimum load. Calculate the value for R1 using the following equation:

$$R1 = R2 \times \left(\frac{V_{OUT}}{1.215V} - 1 \right)$$

For fixed output version, V_{OUT} also can be adjusted by adding external resistor divider. Just note to take internal FB resistor divider into consideration when choose external divider.

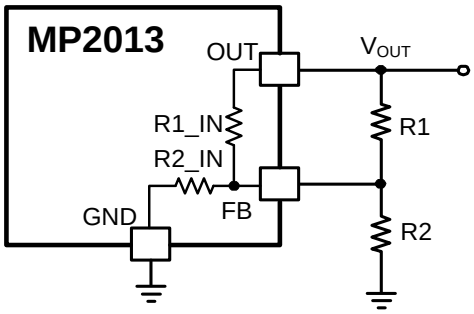

Figure 3: FB Divider of Fixed Output Version

The internal FB resistor dividers for different fixed output versions please see below table.

Table 1: Internal FB Resistor Divider

Fixed Output Voltage	R1_IN	R2_IN
3.3V	1.72MΩ	1MΩ

Input Capacitor

For proper operation, place a ceramic capacitor (C1) between 1μF and 10μF of dielectric type X5R or X7R between the input pin and ground. Larger values in this range will help improve line transient response.

Output Capacitor

For stable operation, use a ceramic capacitor (C2) of type X5R or X7R between 1μF and 10μF. Larger values in this range will help improve load transient response and reduce noise. Output capacitors of other dielectric types may be used, but are not recommended as their capacitance can deviate greatly from their rated value over temperature.

To improve load transient response, add a small ceramic (X5R, X7R or Y5V dielectric) 22nF feed forward capacitor in parallel with R1. The feed forward capacitor is not required for stable operation.

OUTPUT NOISE

The MP2013 will exhibit noise on the output during normal operation. This noise is negligible for most applications. However, in applications that include analog-to-digital converters (ADCs) of more than 12 bits, one needs to consider the ADC's power supply rejection specifications. The feed forward capacitor C2 across R1 will significantly reduce the output noise.

PCB LAYOUT GUIDE

PCB layout is very important to achieve good regulation, ripple rejection, transient response and thermal performance. It is highly recommended to duplicate EVB layout for optimum performance.

If change is necessary, please follow these guidelines and take figure 5 for reference.

1) Input and output bypass ceramic capacitors are suggested to be put close to the IN Pin and OUT Pin respectively.
2) Ensure all feedback connections are short and direct. Place the feedback resistors and compensation components as close to the chip as possible.

MPS Proprietary Information. Patent Protected. Unauthorized Photocopy and Duplication Prohibited.
© 2014 MPS. All Rights Reserved.

3) Connect IN, OUT and especially GND respectively to a large copper area to cool the chip to improve thermal performance and long-term reliability.

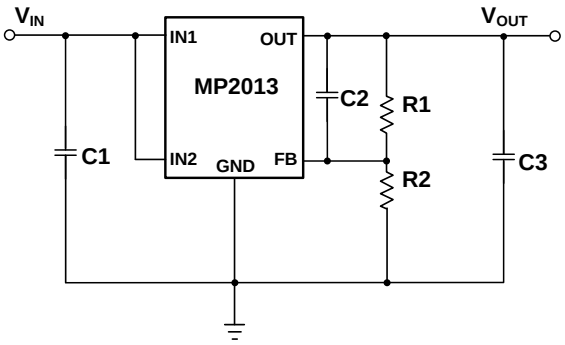

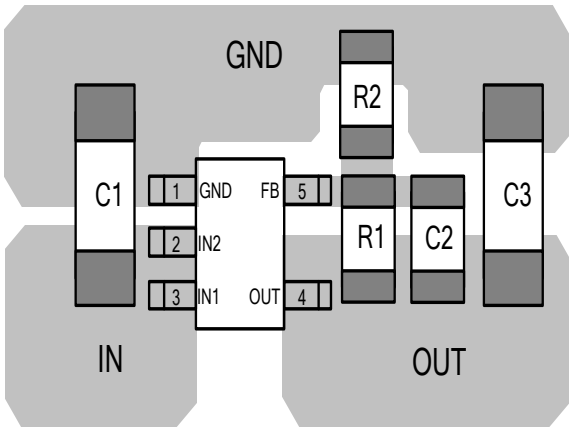

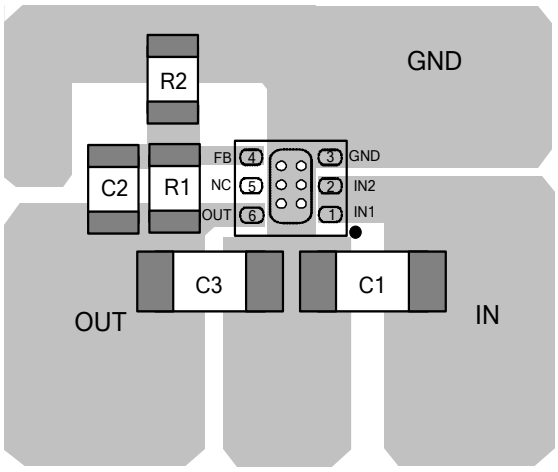

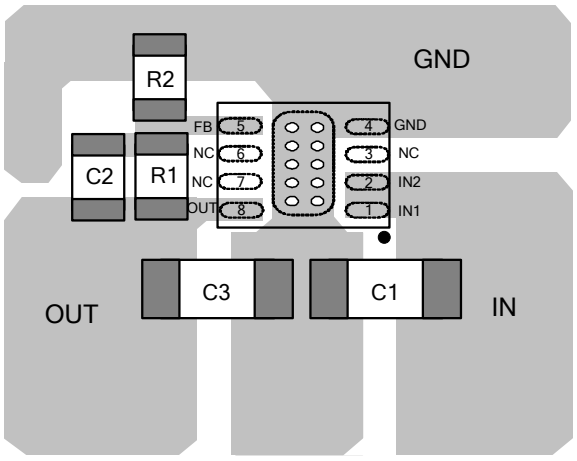

Figure 5: PCB Layout (Top Layer)

DESIGN EXAMPLE

Below is a design example following the application guidelines for V_{OUT}=3.3V with feedforward cap.

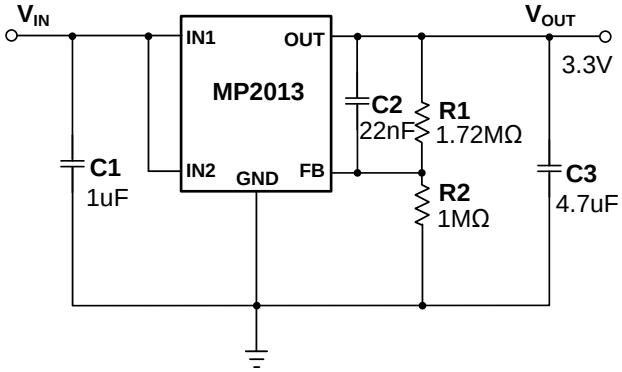

Figure 6: Design Example

MPS Proprietary Information. Patent Protected. Unauthorized Photocopy and Duplication Prohibited.
© 2014 MPS. All Rights Reserved.

TYPICAL APPLICATION CIRCUITS

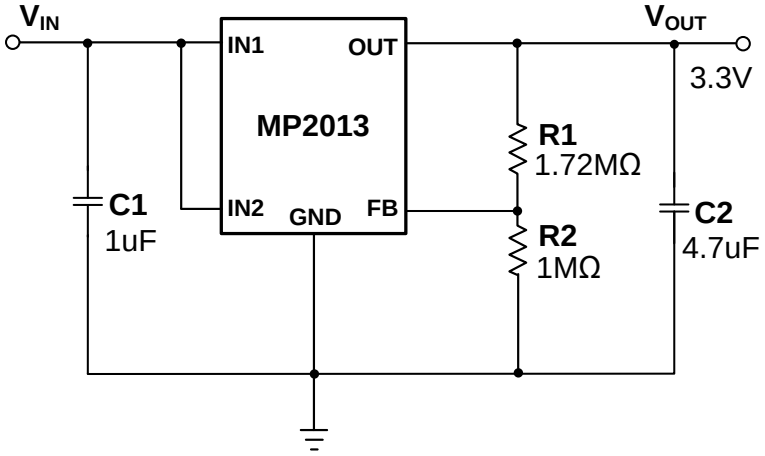

Figure 7: 3.3V Output Typical Application Circuit

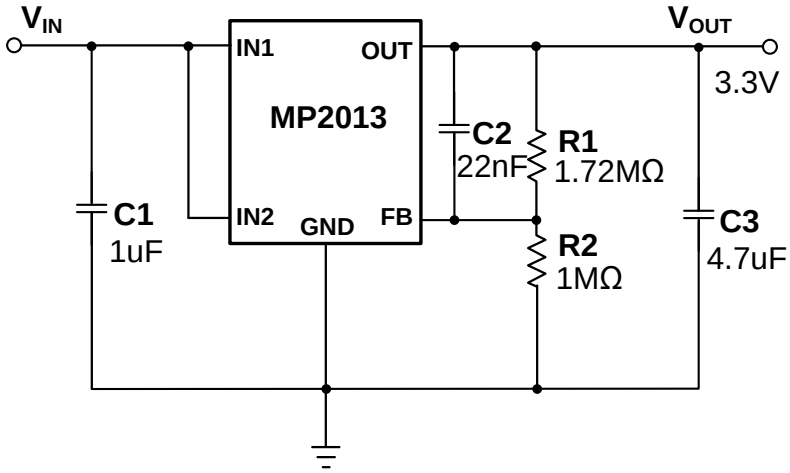

Figure 8: 3.3V Output with Feedforward Capacitor

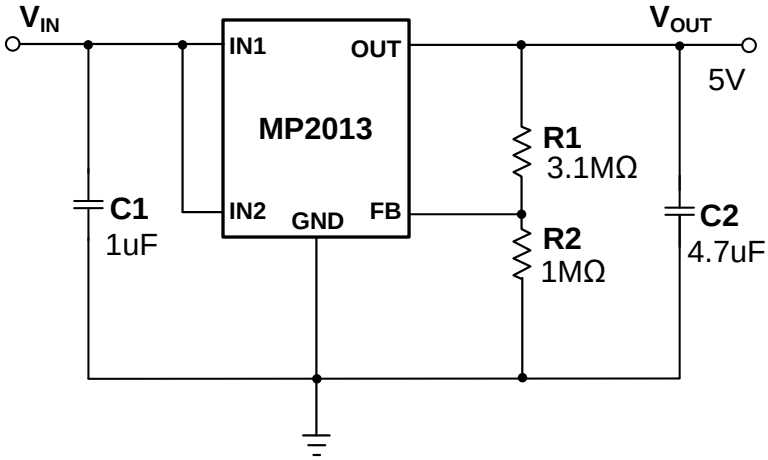

Figure 9: 5V Output Typical Application Circuit

MPS Proprietary Information. Patent Protected. Unauthorized Photocopy and Duplication Prohibited.
© 2014 MPS. All Rights Reserved.

PACKAGE INFORMATION

QFN8 (3x3mm)

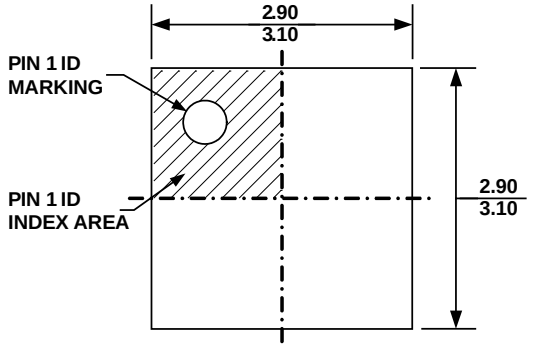

TOP VIEW

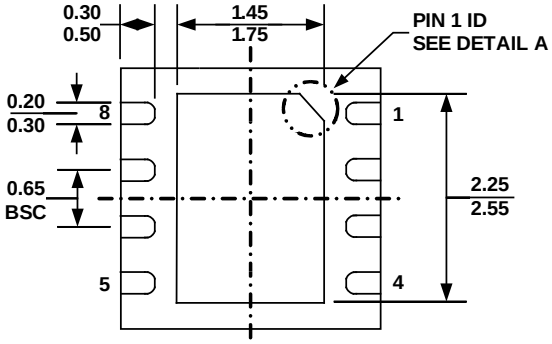

BOTTOM VIEW

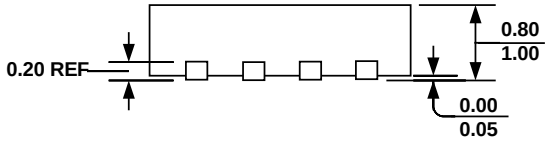

SIDE VIEW

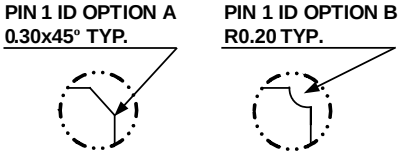

DETAIL A

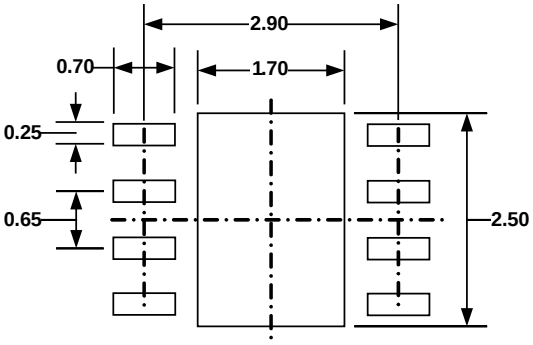

RECOMMENDED LAND PATTERN

NOTE:

1) ALL DIMENSIONS ARE IN MILLIMETERS
2) EXPOSED PADDLE SIZE DOES NOT INCLUDE MOLD FLASH.
3) LEAD COPLANARITY SHALL BE 0.10 MILLIMETER MAX.
4) JEDEC REFERENCE IS MO-229, VARIATION VEEC-2.
5) DRAWING IS NOT TO SCALE

MPS Proprietary Information. Patent Protected. Unauthorized Photocopy and Duplication Prohibited.
© 2014 MPS. All Rights Reserved.

QFN6 (2x2mm)

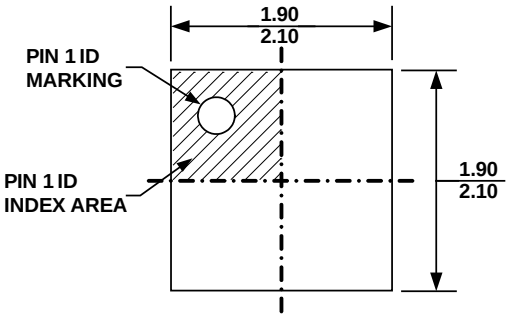

TOP VIEW

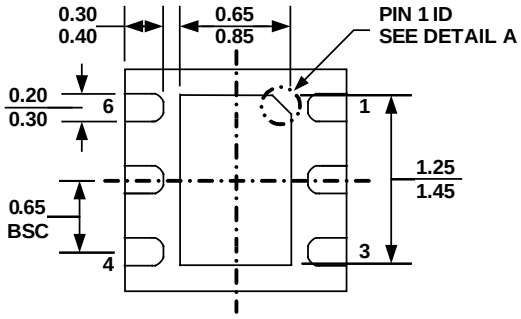

BOTTOM VIEW

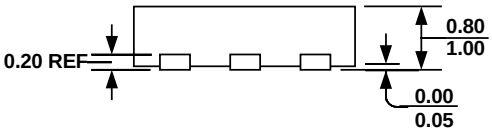

SIDE VIEW

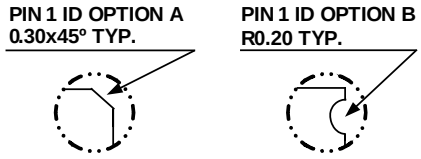

DETAIL A

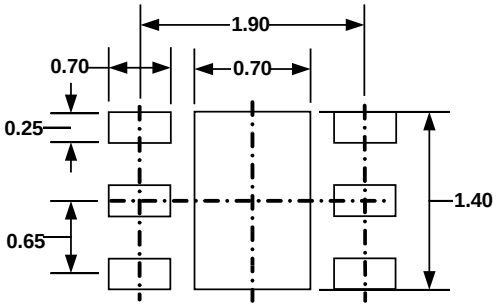

RECOMMENDED LAND PATTERN

NOTE:

1) ALL DIMENSIONS ARE IN MILLIMETERS
2) EXPOSED PADDLE SIZE DOES NOT INCLUDE MOLD FLASH
3) LEAD COPLANARITY SHALL BE 0.10 MILLIMETER MAX
4) JEDEC REFERENCE IS MO-229, VARIATION VCCC.
5) DRAWING IS NOT TO SCALE

MPS Proprietary Information. Patent Protected. Unauthorized Photocopy and Duplication Prohibited.
© 2014 MPS. All Rights Reserved.

TSOT23-5

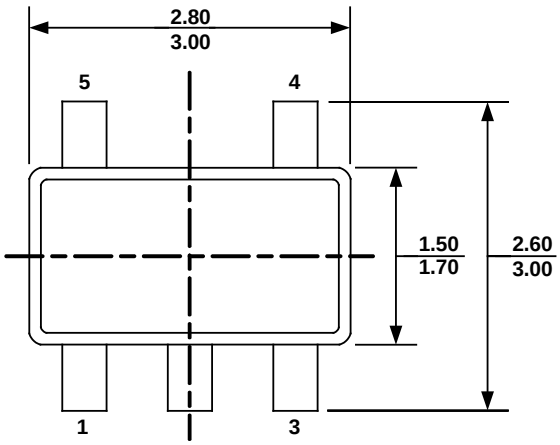

TOP VIEW

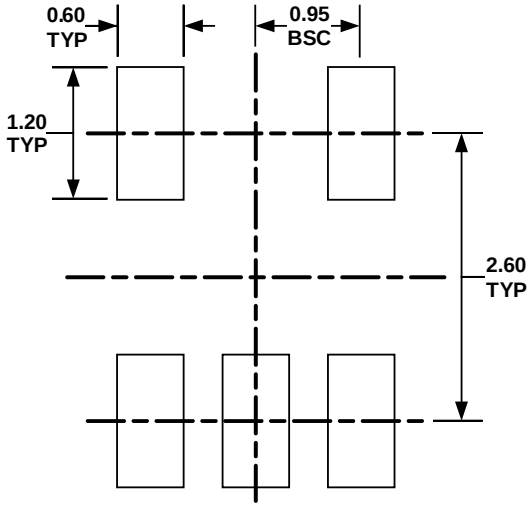

RECOMMENDED LAND PATTERN

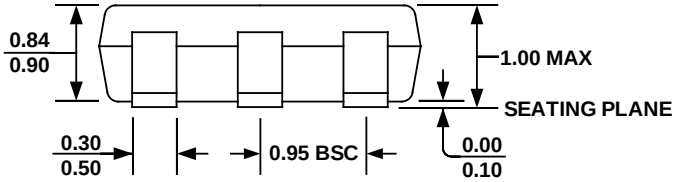

FRONT VIEW

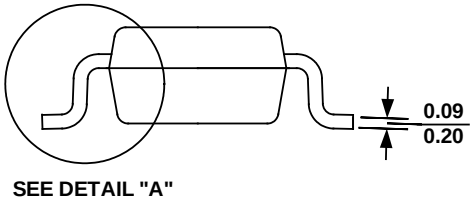

SIDE VIEW

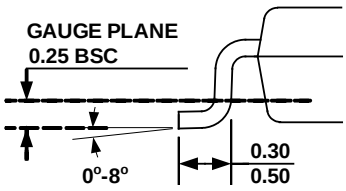

DETAIL "A"

NOTE:

1) ALL DIMENSIONS ARE IN MILLIMETERS
2) PACKAGE LENGTH DOES NOT INCLUDE MOLD FLASH, PROTRUSION OR GATE BURR.
3) PACKAGE WIDTH DOES NOT INCLUDE INTERLEAD FLASH OR PROTRUSION.
4) LEAD COPLANARITY(BOTTOM OF LEADS AFTER FORMING) SHALL BE 0.10 MILLIMETERS MAX.
5) DRAWING CONFORMS TO JEDEC MO-193, VARIATION AA.
6) DRAWING IS NOT TO SCALE

NOTICE: The information in this document is subject to change without notice. Please contact MPS for current specifications. Users should warrant and guarantee that third party Intellectual Property rights are not infringed upon when integrating MPS products into any application. MPS will not assume any legal responsibility for any said applications.

MPS Proprietary Information. Patent Protected. Unauthorized Photocopy and Duplication Prohibited.
© 2014 MPS. All Rights Reserved.