MP18024

100V, 4A, High Frequency Half-Bridge Gate Driver

The Future of Analog IC Technology

DESCRIPTION

The MP18024 is a high-frequency, 100V, half-bridge, N-channel, power MOSFET driver. Its low-side and high-side driver channels are independently controlled and matched with less than 5ns in time delay. Under-voltage lockout on both high-side and low-side supplies force their outputs low in case of insufficient supply. The integrated bootstrap diode reduces external component count.

FEATURES

- Drives an N-Channel MOSFET Half Bridge
- 100V V_{BST} Voltage Range
- On-Chip Bootstrap Diode
- Typical Propagation Delay of 20ns
- Gate Drive Matching Of Less Than 5ns
- Drives A 2.2nf Load with 15nm Rise Time and 12ns Fall Time at12v VDD
- TTL-Compatible Input
- Quiescent Current of Less Than 150μA
- UVLO for Both High Side and Low Side
- SOIC8E Package

APPLICATIONS

- Telecom Half-Bridge Power Supplies
- Avionics DC-DC Converters
- Two-Switch Forward Converters
- Active-Clamp Forward Converters

For MPS green status, please visit MPS website under Quality Assurance. "MPS" and "The Future of Analog IC Technology" are Registered Trademarks of Monolithic Power Systems, Inc.

TYPICAL APPLICATION

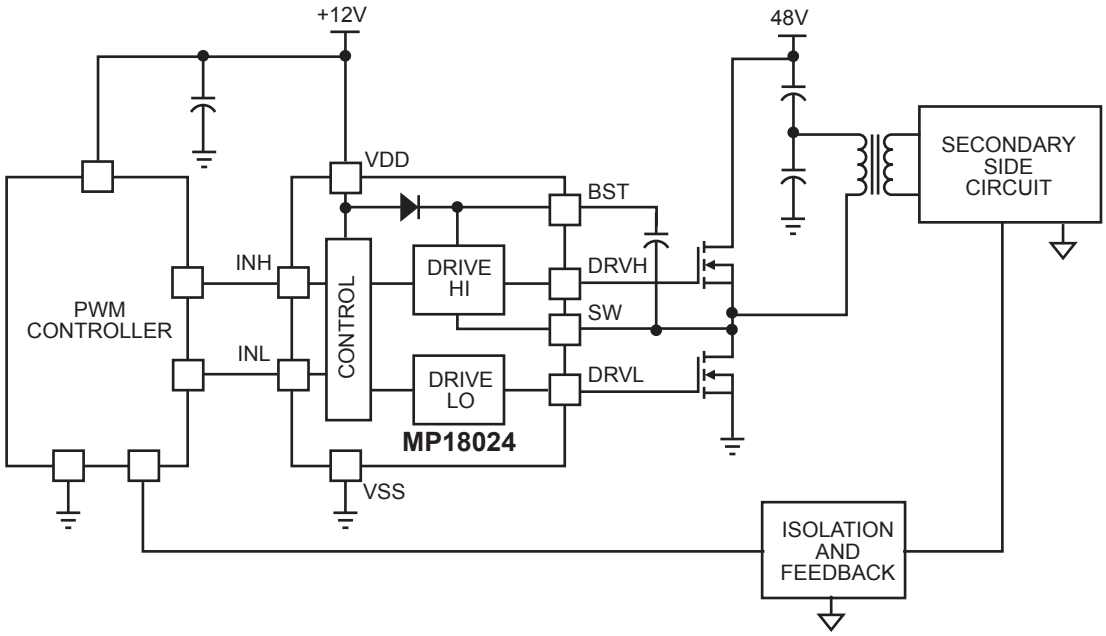

MPS Proprietary Information. Patent Protected. Unauthorized Photocopy and Duplication Prohibited.
© 2011 MPS. All Rights Reserved.

ORDERING INFORMATION

Part Number*	Package	Top Marking
MP18024HN	SOIC8E	MP18024HN

* For Tape & Reel, add suffix –Z (e.g. MP18024HN–Z);
For RoHS compliant packaging, add suffix –LF; (e.g. MP18024HN–LF–Z)

PACKAGE REFERENCE

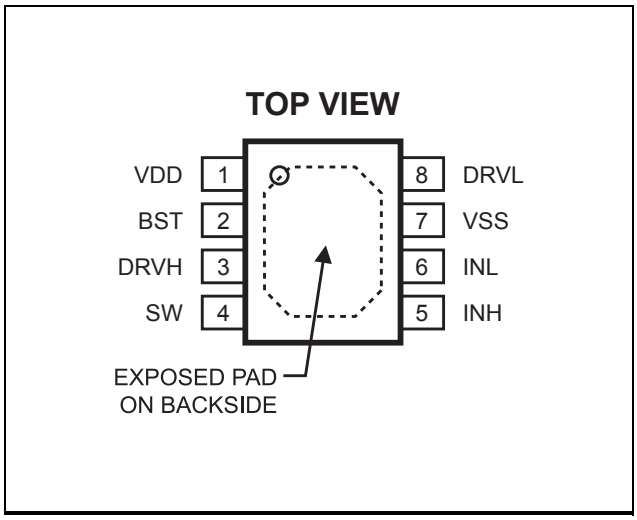

ABSOLUTE MAXIMUM RATINGS (1)

Supply Voltage (V_{DD}).....-0.3V to +18V
SW Voltage (V_{SW}) .....-5.0V to +105V
BST Voltage (V_{BST}) .....-0.3V to +118V
BST to SW .....-0.3V to +18V
DRVH to SW..... -0.3V to (BST-SW) + 0.3V
DRVL to VSS .....-0.3V to (VDD + 0.3V)
All Other Pins.....-0.3V to (V_{DD} + 0.3V)
Continuous Power Dissipation (T_A = 25°C) (2)
..... 2.6W
Junction Temperature.....150°C
Lead Temperature .....260°C
Storage Temperature..... -65°C to +150°C

Recommended Operating Conditions (3)

Supply Voltage V_{DD} .....9.0V to 16.0V
SW Voltage (V_{SW}) .....-1.0V to 100V
SW Slew Rate..... <50V/ns
Operating Junction Temp. (T_J). -40°C to +125°C

Thermal Resistance (4) θ_{JA} θ_{JC}

SOIC8E	48	10	°C/W

Notes:

1) Exceeding these ratings may damage the device.
2) The maximum allowable power dissipation is a function of the maximum junction temperature T_J(MAX), the junction-to-ambient thermal resistance θ_{JA}, and the ambient temperature T_A. The maximum allowable continuous power dissipation at any ambient temperature is calculated by P_D(MAX)=(T_J(MAX)-T_A)/ θ_{JA}. Exceeding the maximum allowable power dissipation will cause excessive die temperature, and the regulator will go into thermal shutdown. Internal thermal shutdown circuitry protects the device from permanent damage.
3) The device is not guaranteed to function outside of its operating conditions.
4) Measured on JESD51-7, 4-layer PCB.

MPS Proprietary Information. Patent Protected. Unauthorized Photocopy and Duplication Prohibited.
© 2011 MPS. All Rights Reserved.

ELECTRICAL CHARACTERISTICS

V_{DD} = V_{BST}-V_{SW} = 12V, V_{SS} = V_{SW} = 0V, No load at DRVH and DRVL, T_A = +25°C, unless otherwise noted.

Parameter	Symbol	Condition	Min	Typ	Max	Units
Supply Currents						
VDD quiescent current	I_{DDQ}	INL = INH = 0		100	150	μA
VDD operating current	I_{DDO}	fsw = 500kHz		9		mA
Floating driver quiescent current	I_{BSTQ}	INL = INH = 0		60	90	μA
Floating driver operating current	I_{BSTO}	fsw = 500kHz		7.5		mA
Leakage current	I_{LK}	BST = SW = 100V		0.05	1	μA
Inputs						
INL/INH High				2	2.4	V
INL/INH Low			1	1.4		V
INL/INH internal pull-down resistance	R_{IN}			185		kΩ
Under Voltage Protection						
VDD rising threshold	V_{DDR}		8.1	8.4	8.8	V
VDD hysteresis	V_{DDH}			0.5		V
(BST-SW) rising threshold	V_{BSTR}		6.9	7.3	7.7	V
(BST-SW) hysteresis	V_{BSTH}			0.55		V
Bootstrap Diode						
Bootstrap diode VF @ 100μA	V_{F1}			0.5		V
Bootstrap diode VF @ 100mA	V_{F2}			0.95		V
Bootstrap diode dynamic R	R_D	@ 100mA		2		Ω
Low Side Gate Driver						
Low level output voltage	V_{OLL}	I_O = 100mA		0.08		V
High level output voltage to rail	V_{OHL}	I_O = -100mA		0.23		V
Peak pull-up current	I_{OHL}	V_{DRVL} = 0V, V_{DD} = 12V		3		A
		V_{DRVL} = 0V, V_{DD} = 16V		4.7		A
Peak pull-down current	I_{OLL}	V_{DRVL} = V_{DD} = 12V		4.5		A
		V_{DRVL} = V_{DD} = 16V		6		A
Floating Gate Driver						
Low level output voltage	V_{OLH}	I_O = 100mA		0.08		V
High level output voltage to rail	V_{OHH}	I_O = -100mA		0.23		V
Peak pull-up current	I_{OHH}	V_{DRVH} = 0V, V_{DD} = 12V		2.6		A
		V_{DRVH} = 0V, V_{DD} = 16V		4		A
Peak pull-down current	I_{OLH}	V_{DRVH} = V_{DD} = 12V		4.5		A
		V_{DRVH} = V_{DD} = 16V		5.9		A

MPS Proprietary Information. Patent Protected. Unauthorized Photocopy and Duplication Prohibited.
© 2011 MPS. All Rights Reserved.

ELECTRICAL CHARACTERISTICS *(continued)*

V_{DD} = V_{BST}-V_{SW} = 12V, V_{SS} = V_{SW} = 0V, No load at DRVH and DRVL, T_A = 25°C, unless otherwise noted.

Parameter	Symbol	Condition	Min	Typ	Max	Units
Switching Spec. --- Low Side Gate Driver						
Turn-off propagation delay INL falling to DRVL falling	T_{DLFF}			20		ns
Turn-on propagation delay INL rising to DRVL rising	T_{DLRR}			20		
DRVL rise time		C_L = 2.2nF		15		ns
DRVL fall time		C_L = 2.2nF		9		ns
Switching Spec. --- Floating Gate Driver						
Turn-off propagation delay INL falling to DRVH falling	T_{DHFF}			20		ns
Turn-on propagation delay INL rising to DRVH rising	T_{DHRR}			20		ns
DRVH rise time		C_L = 2.2nF		15		ns
DRVH fall time		C_L = 2.2nF		12		ns
Switching Spec. --- Matching						
Floating driver turn-off to low side drive turn-on	T_{MON}			1	5	ns
Low side driver turn-off to floating driver turn-on	T_{MOFF}			1	5	ns
Minimum input pulse width that changes the output	T_{PW}				50(5)	ns
Bootstrap diode turn-on or turn-off time	T_{BS}			10(5)		ns
Thermal shutdown				150		°C
Thermal shutdown hysteresis				25		°C

Note:
5) Guaranteed by design.

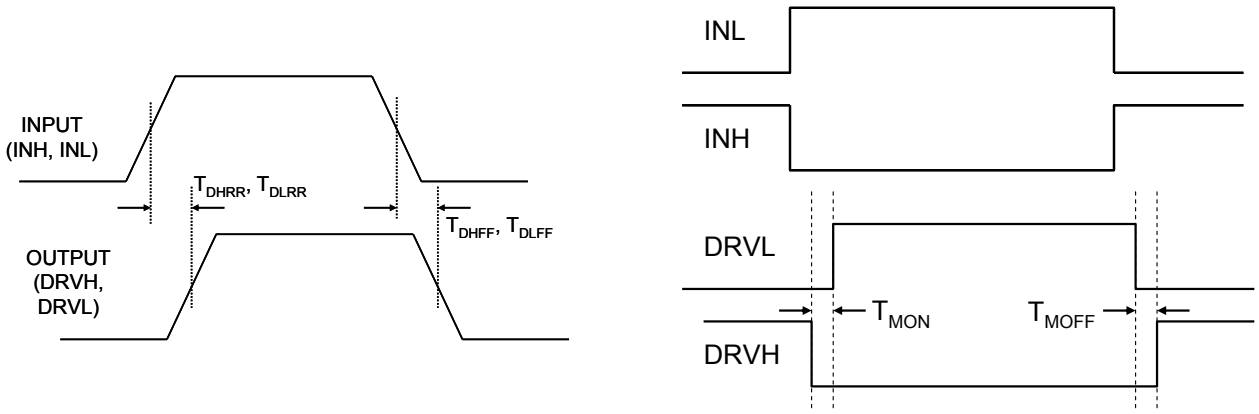

Figure 1—Timing Diagram

MPS Proprietary Information. Patent Protected. Unauthorized Photocopy and Duplication Prohibited.
© 2011 MPS. All Rights Reserved.

PIN FUNCTIONS

Pin #	Name	Description
1	VDD	Supply input. This pin supplies power to all the internal circuitry. Place a decoupling capacitor to ground close to this pin to ensure stable and clean supply.
2	BST	Bootstrap. This is the positive power supply for the internal floating high-side MOSFET driver. Connect a bypass capacitor between this pin and SW pin.
3	DRVH	Floating driver output.
4	SW	Switching node.
5	INH	Control signal input for the floating driver.
6	INL	Control signal input for the low side driver.
7	VSS, exposed pad	Chip ground. Connect exposed pad to VSS for proper thermal operation.
8	DRVL	Low side driver output.

MPS Proprietary Information. Patent Protected. Unauthorized Photocopy and Duplication Prohibited.
© 2011 MPS. All Rights Reserved.

TYPICAL PERFORMANCE CHARACTERISTICS

V_{DD} = 12V, V_{SS} = V_{SW} = 0V, T_A = 25°C, unless otherwise noted.

I_{DDO} Operation Current vs. Frequency

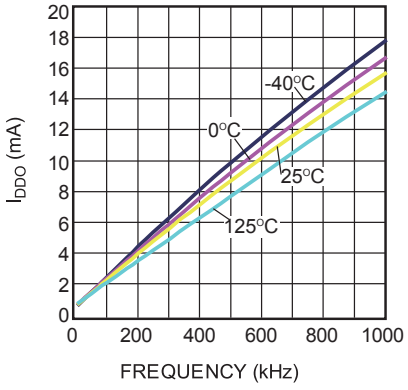

I_{BSTO} Operation Current vs. Frequency

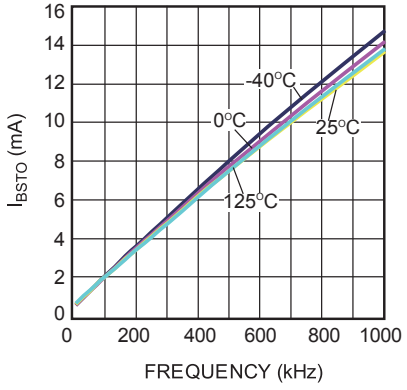

High Level Output Voltage vs. Temperature

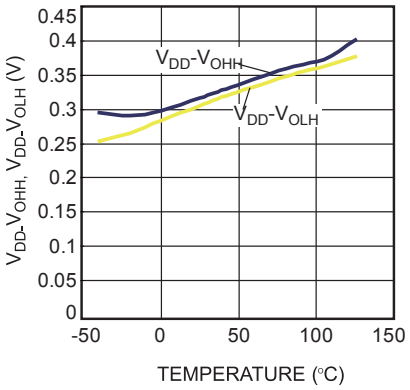

Low Level Output Voltage vs. Temperature

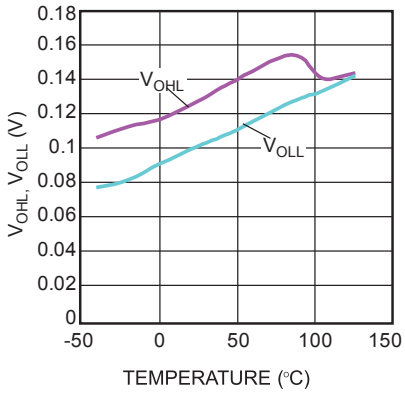

Undervoltage Lockout Threshold vs. Temperature

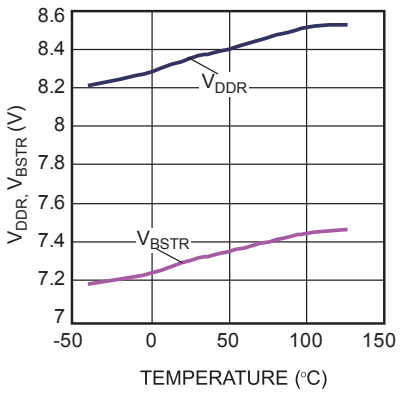

Undervoltage Lockout Hysteresis vs. Temperature

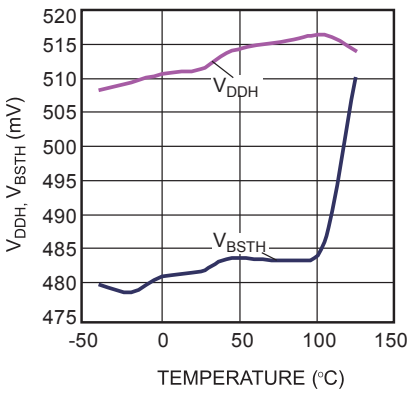

Bootstrap Diode I-V Characteristic

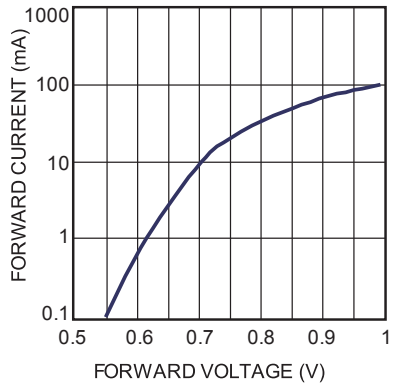

Quiescent Current vs. Voltage

INH=INL=0V

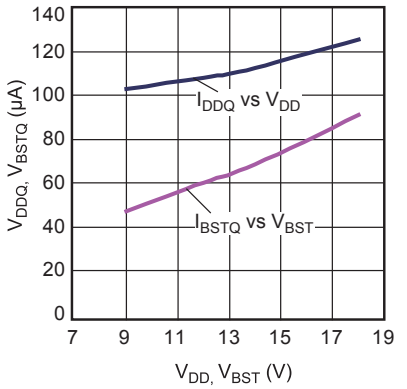

Propagation Delay vs. Temperature

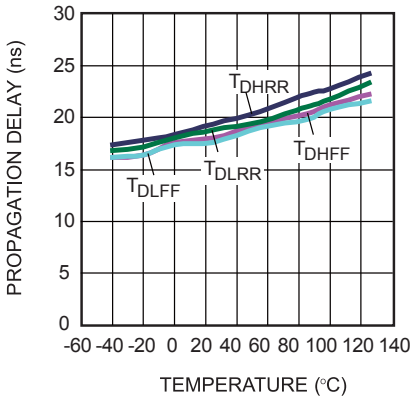

MPS Proprietary Information. Patent Protected. Unauthorized Photocopy and Duplication Prohibited.
© 2011 MPS. All Rights Reserved.

TYPICAL PERFORMANCE CHARACTERISTICS *(continued)*

V_{DD} = 12V, V_{SS} = V_{SW} = 0V, T_A = 25°C, unless otherwise noted.

Peak Current vs. Vdd Voltage

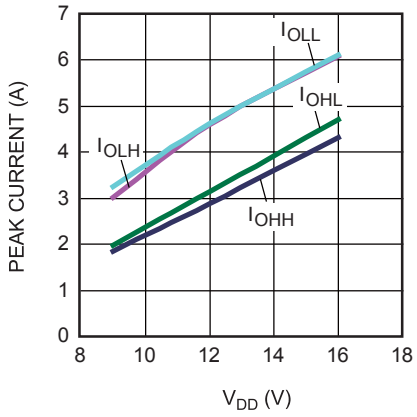

Turn-on Propagation Delay

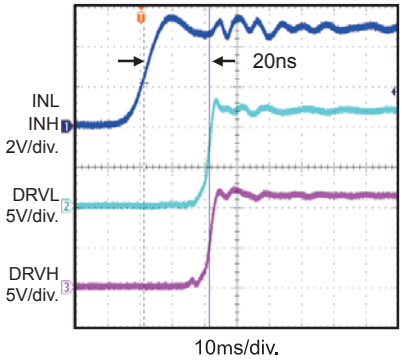

Turn-off Propagation Delay

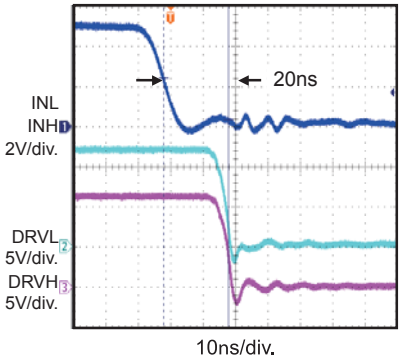

Gate Drive Matching T_{MOFF}

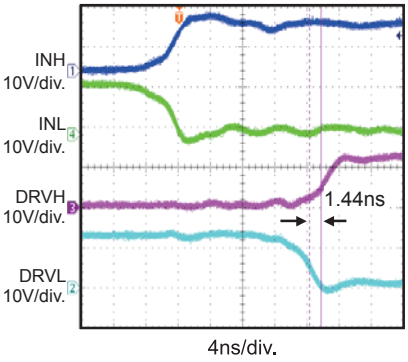

Gate Drive Matching T_{MON}

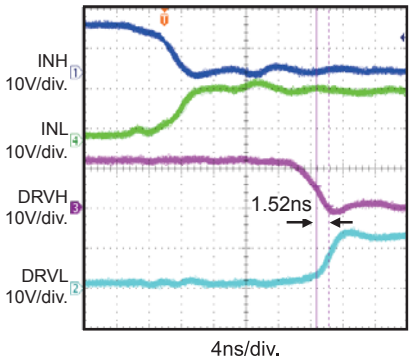

Drive Rise Time

2.2nF Load

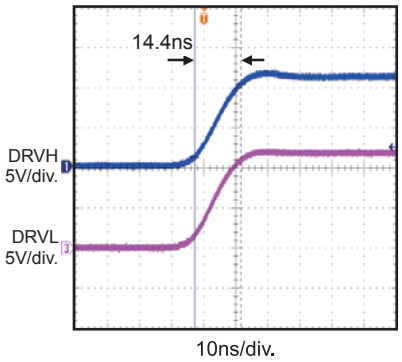

Drive Fall Time

2.2nF Load

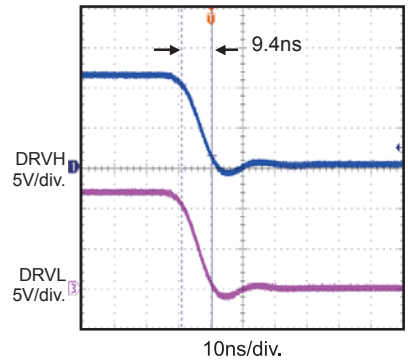

MPS Proprietary Information. Patent Protected. Unauthorized Photocopy and Duplication Prohibited.
© 2011 MPS. All Rights Reserved.

BLOCK DIAGRAM

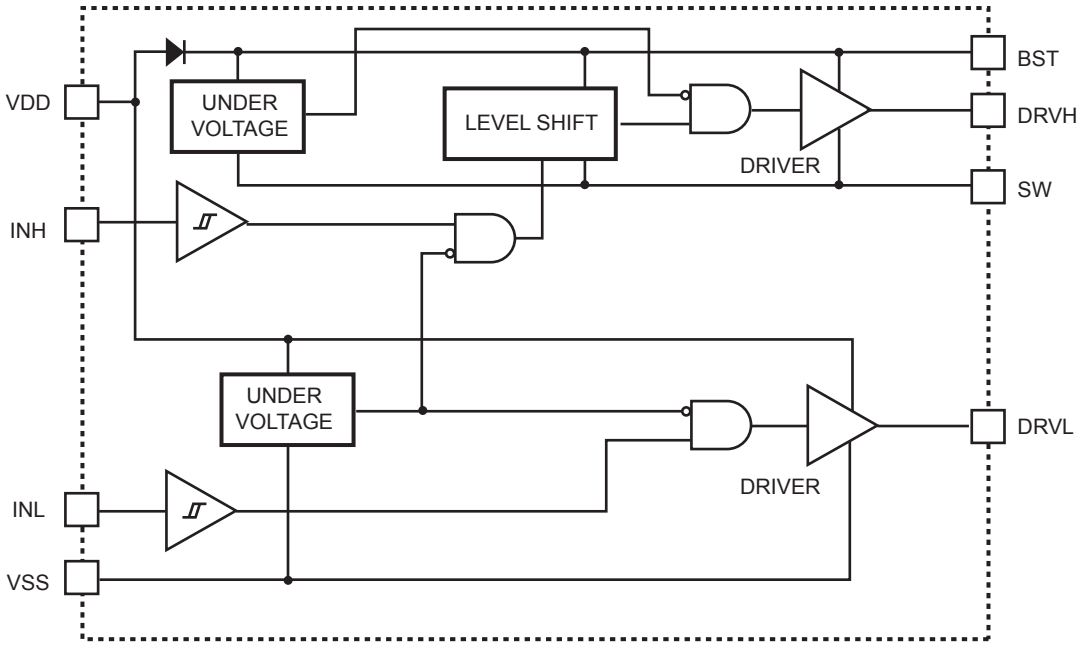

Figure 2—Function Block Diagram

MPS Proprietary Information. Patent Protected. Unauthorized Photocopy and Duplication Prohibited.
© 2011 MPS. All Rights Reserved.

APPLICATION

The input signals INH and INL can be controlled independently. If both INH and INL control the high-side MOSFET and low-side MOSFET of the same bridge, then users must avoid shoot through by setting sufficient dead time between INH and INL low, and vice versa. See Figure 3 below. Dead time is defined as the time interval between INH low and INL low.

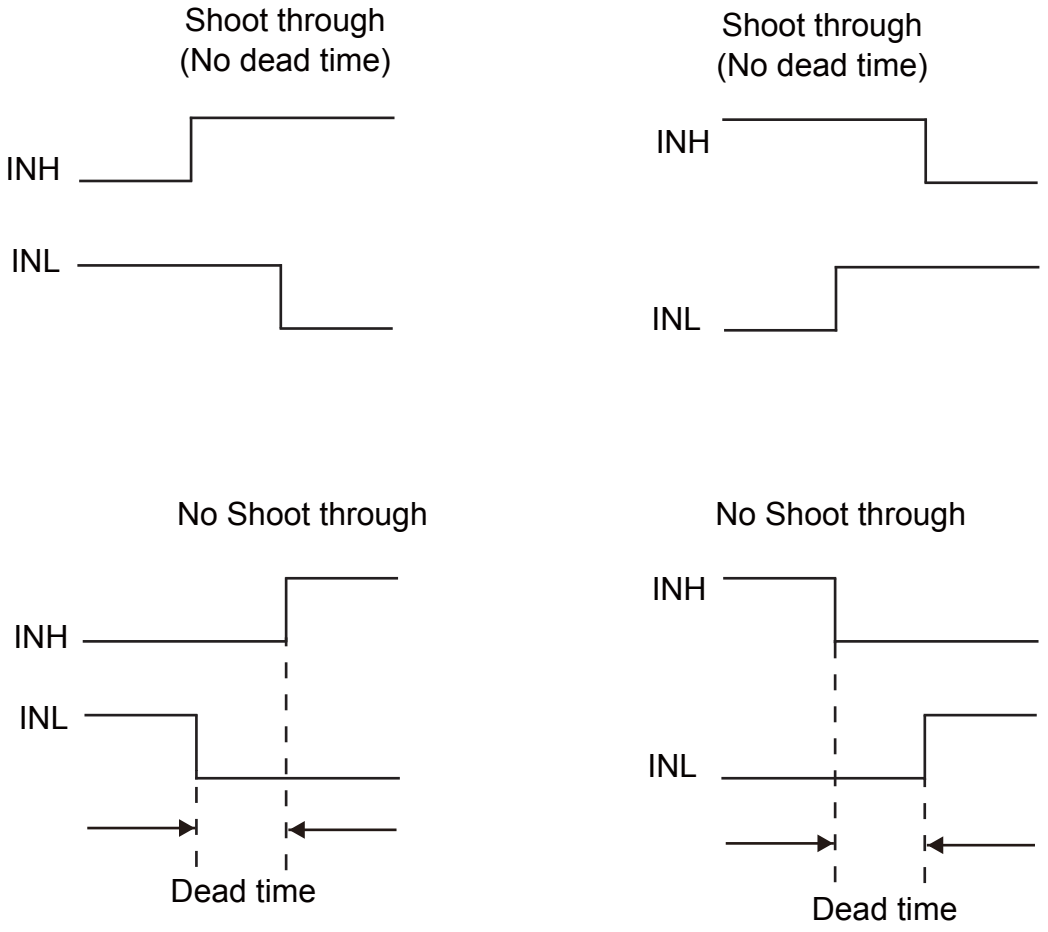

Figure 3—Shoot-Through Timing Diagram

MPS Proprietary Information. Patent Protected. Unauthorized Photocopy and Duplication Prohibited.
© 2011 MPS. All Rights Reserved.

REFERENCE DESIGN CIRCUITS

Half Bridge Converter

The MP18024 drives the MOSFETS with alternating signals (with dead time) in half-bridge converter topology. Therefore, from the PWM controller drives INH and INL with alternating signals The input voltage can go up to 100V.

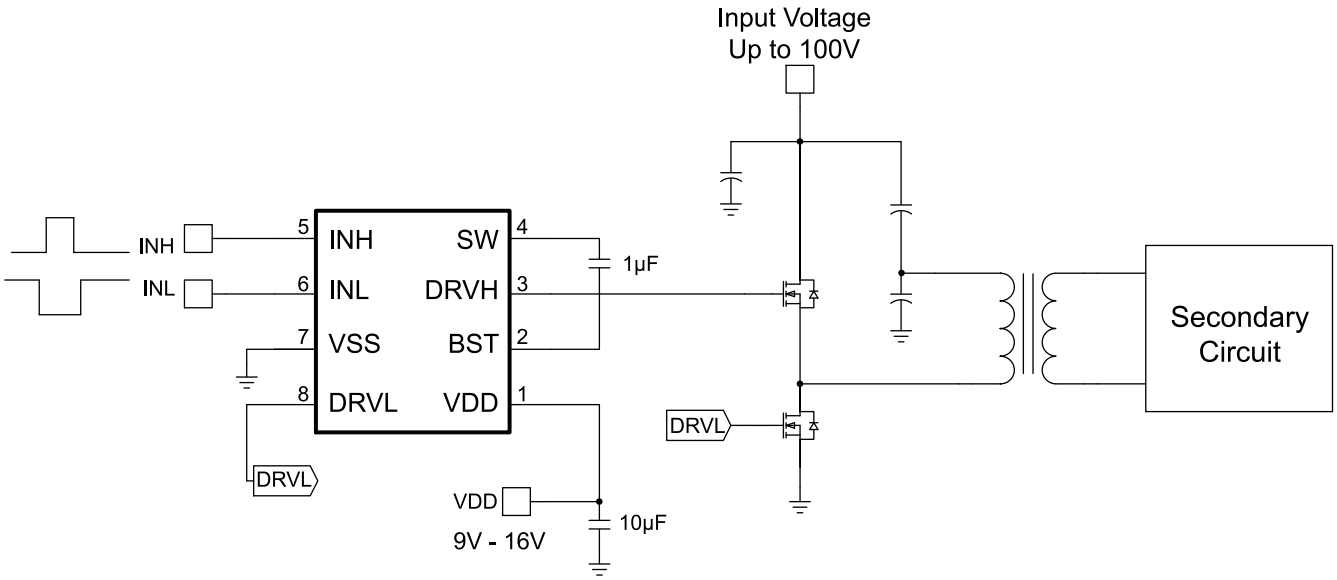

Figure 4—Half Bridge Converter

Two-Switch Forward Converter

In two-switch forward converter topology, both MOSFETs are turned on and off simultaneously. The input signal (INH and INL) comes from a PWM controller that senses the output voltage (and output current during current-mode control).

The Schottky diodes clamp the reverse swing of the power transformer and must be rated for the input voltage. The input voltage can go up to 100V.

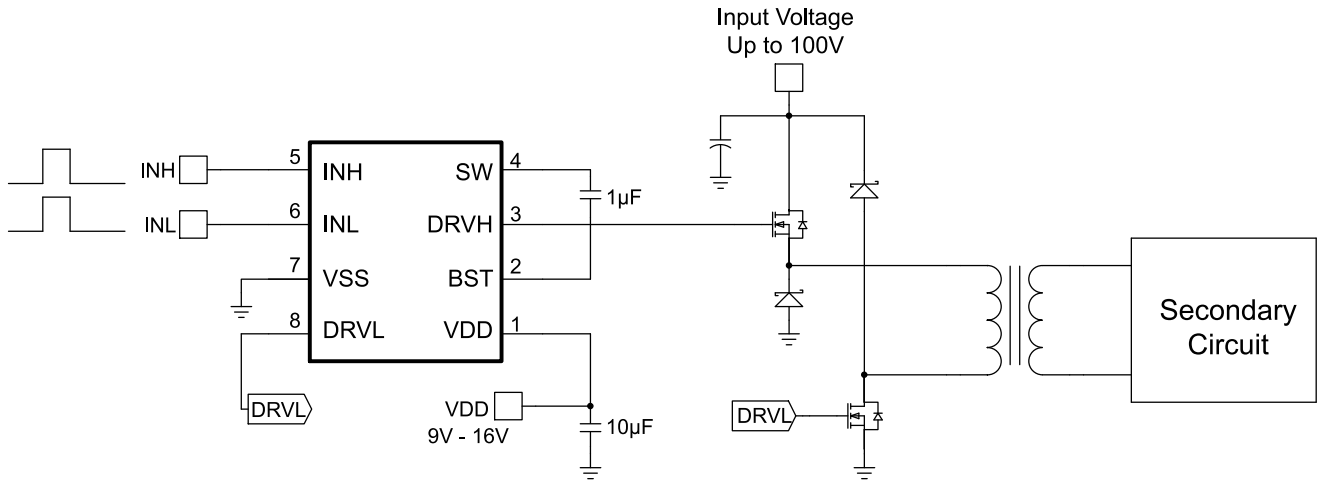

Figure 5—Two-Switch Forward Converter

MPS Proprietary Information. Patent Protected. Unauthorized Photocopy and Duplication Prohibited.
© 2011 MPS. All Rights Reserved.

Active-Clamp Forward Converter

In active-clamp–forward converter topology, the MP18024 drives the MOSFETs with alternating signals. The high-side MOSFET, in conjunction with Creset, is used to reset the power transformer in a lossless manner.

This topology lends itself well to run at duty cycles exceeding 50%. The device may not be able to run at 100V with this topology.

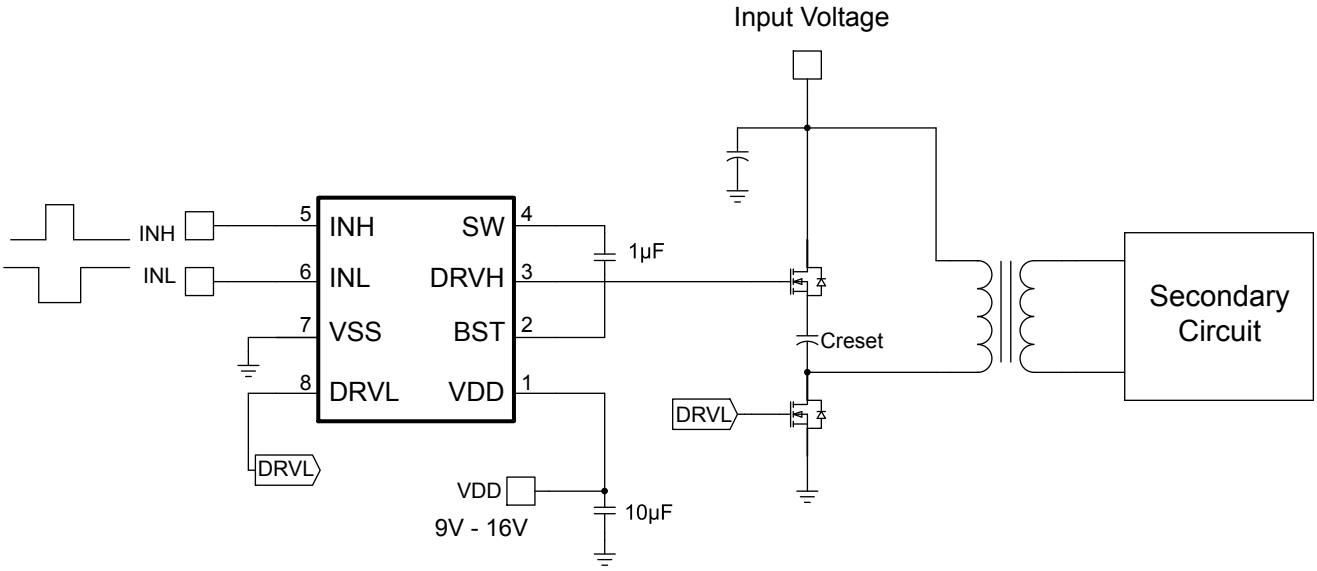

Figure 6—Active-Clamp Forward Converter

MPS Proprietary Information. Patent Protected. Unauthorized Photocopy and Duplication Prohibited.
© 2011 MPS. All Rights Reserved.

PACKAGE INFORMATION

SOIC8E

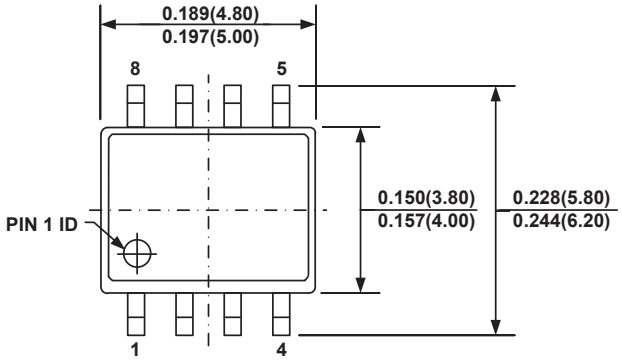

TOP VIEW

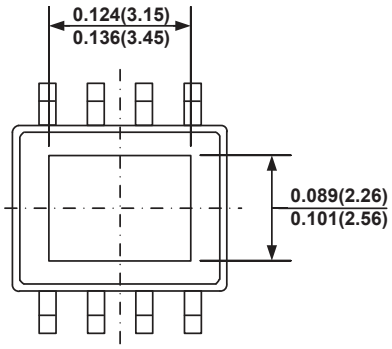

BOTTOM VIEW

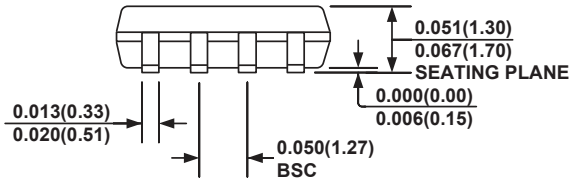

FRONT VIEW

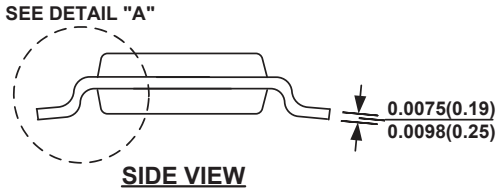

SIDE VIEW

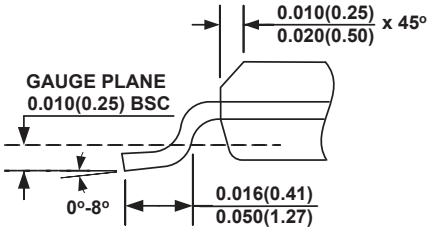

DETAIL "A"

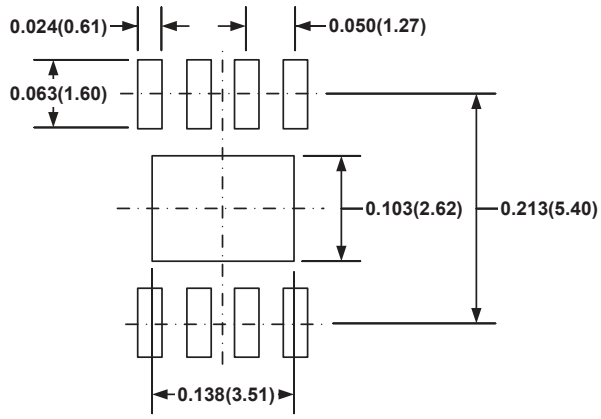

RECOMMENDED LAND PATTERN

NOTE:

1) CONTROL DIMENSION IS IN INCHES. DIMENSION IN BRACKET IS IN MILLIMETERS.
2) PACKAGE LENGTH DOES NOT INCLUDE MOLD FLASH, PROTRUSIONS OR GATE BURRS.
3) PACKAGE WIDTH DOES NOT INCLUDE INTERLEAD FLASH OR PROTRUSIONS.
4) LEAD COPLANARITY (BOTTOM OF LEADS AFTER FORMING) SHALL BE 0.004" INCHES MAX.
5) DRAWING CONFORMS TO JEDEC MS-012, VARIATION BA.
6) DRAWING IS NOT TO SCALE.

NOTICE: The information in this document is subject to change without notice. Users should warrant and guarantee that third party Intellectual Property rights are not infringed upon when integrating MPS products into any application. MPS will not assume any legal responsibility for any said applications.

MPS Proprietary Information. Patent Protected. Unauthorized Photocopy and Duplication Prohibited.
© 2011 MPS. All Rights Reserved.