EV1542DK-00A

700KHz/1.3MHz Boost Converter with a 2A Switch

The Future of Analog IC Technology™

EVALUATION BOARD

GENERAL DESCRIPTION

The EV1542DK-00A is the evaluation board for the MP1542, a current mode step-up converter with a 2A, 0.18Ω internal switch to provide a highly efficient regulator with quick response. The MP1542 can be operated at 700KHz or 1.3MHz allowing for easy filtering and low noise. An external compensation pin gives the user flexibility in setting loop dynamics, which allows the use of small, low-ESR ceramic output capacitors. Soft-start results in small inrush current and can be programmed with an external capacitor. The MP1542 operates from an input voltage as low as 2.5V and can generate 12V at up to 500mA from a 5V supply.

The MP1542 includes under-voltage lockout, current limiting and thermal overload protection preventing damage in the event of an output overload. The MP1542 is available in a low profile 8-pin MSOP package.

FEATURES

- 2A, 0.18Ω, 25V Power MOSFET
- Uses Tiny Capacitors and Inductors
- Pin Selectable 700KHz or 1.3MHz Fixed Switching Frequency
- Programmable Soft-Start
- Operates with Input Voltage as Low as 2.5V and Output Voltage as High as 22V
- 12V at 500mA from 5V Input
- UVLO, Thermal Shutdown
- Internal Current Limit
- Available in an 8-Pin MSOP Package

APPLICATIONS

- LCD Displays
- Portable Applications
- Handheld Computers and PDAs
- Digital Still and Video Cameras

"MPS" and "Monolithic Power Systems", are Trademarks of Monolithic Power Systems, Inc.

ELECTRICAL SPECIFICATIONS

Parameter	Symbol	Value	Units
Input Voltage	V_{IN}	2.5 – 6	V
Output Voltage	V_{OUT}	8	V
Output Current	I_{OUT}	400	mA

EV1542DK-00A EVALUATION BOARD



Dimensions (2.0"X x 2.0"Y x 0.4"Z)

Board Number	MPS IC Number
EV1542DK-00A	MP1542DK

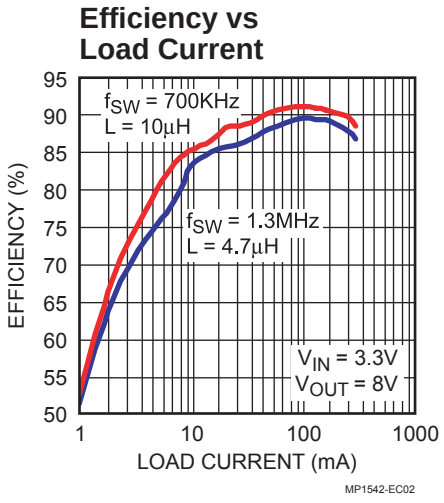

MPS Proprietary Information. Unauthorized Photocopy and Duplication Prohibited.
© 2005 MPS. All Rights Reserved.

EVALUATION BOARD SCHEMATIC

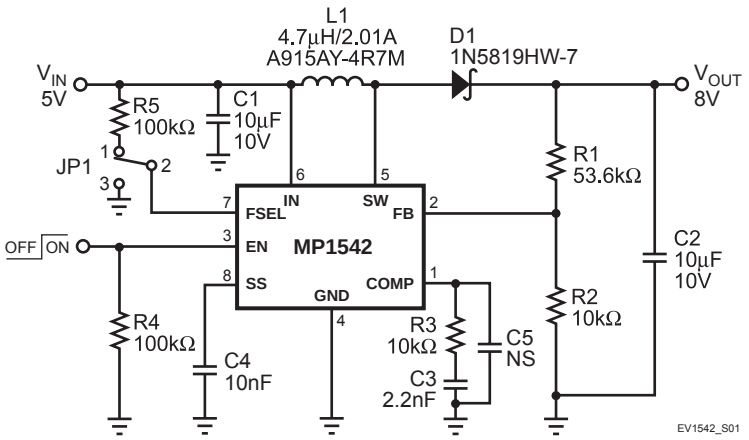

EV1542DK-00A BILL OF MATERIALS

Qty	Ref	Value	Description	Package	Manufacturer	Manufacturer P/N
2	C1, C2	10µF	Ceramic Capacitor, 10V, X7R	1210	AVX	1210ZC106KAT2A
1	C3	2.2nF	Ceramic Capacitor, 50V, X7R	0805	AVX	08055C222KAT2A
1	C4	10nF	Ceramic Capacitor, 50V, X7R	0805	AVX	08055C103KAT2A
1	C5		Not Stuffed			
1	D1		Schottky Diodes, 40V, 1A	SOD123	Diodes Inc	1N5819HW-7
1	JP1		3-Pin Connector Header, 0.100		Sullins	PTC03SAAN
1	L1	4.7µH	2.01A, D53LC	SMD	Toko	A915AY-4R7M
1	R1	53.6kΩ	Film Resistor, 1%	0805	Panasonic	ERJ-6ENF5362V
2	R2, R3	10kΩ	Film Resistor, 1%	0805	Panasonic	ERJ-6ENF1002V
2	R4, R5	100kΩ	Film Resistor, 5%	0805	Panasonic	ERJ-6GEYJ104V
1	U1		DC-DC Converter	MSOP-8	MPS	MP1542

MPS Proprietary Information. Unauthorized Photocopy and Duplication Prohibited.
© 2005 MPS. All Rights Reserved.

PRINTED CIRCUIT BOARD LAYOUT

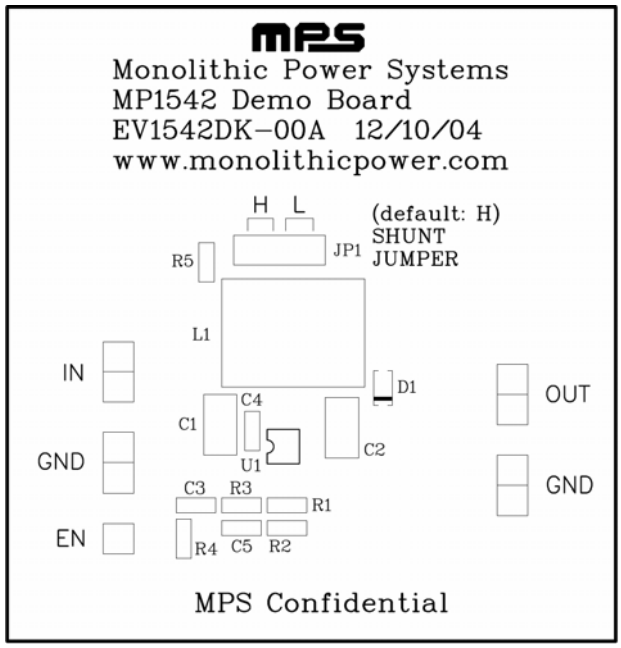

Figure 1—Top Silk Layer

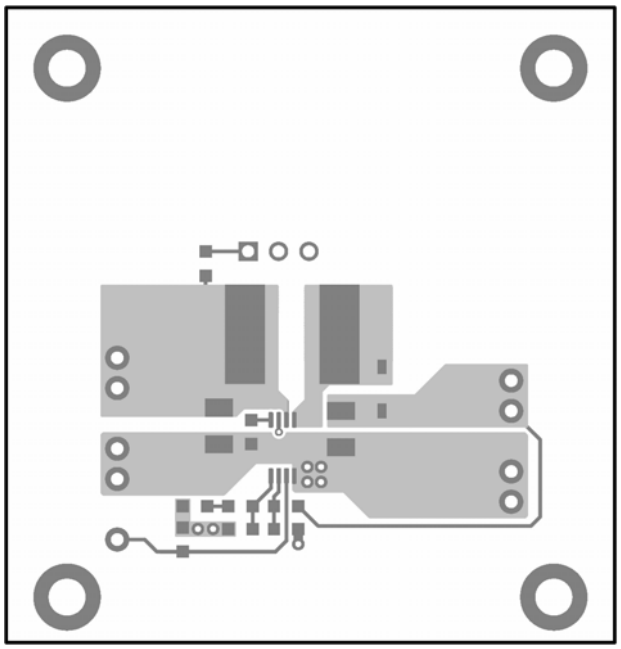

Figure 2—Top Layer

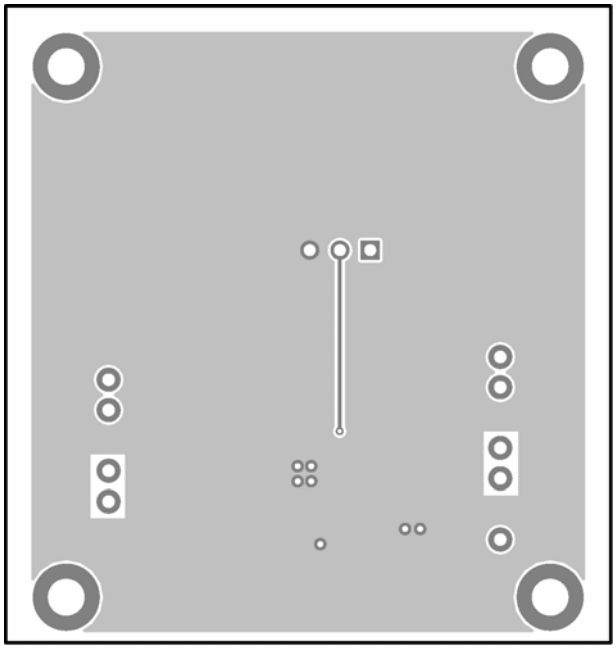

Figure 3—Bottom Layer

MPS Proprietary Information. Unauthorized Photocopy and Duplication Prohibited.
© 2005 MPS. All Rights Reserved.

QUICK START GUIDE

The output voltage of this board is set to 8V. The board layout accommodates most commonly used inductors and output capacitors.

1. Preset Power Supply to 2.5V ≤ V_{IN} ≤ 6V.
2. Turn Power Supply off.
3. Connect Power Supply terminals to:
    a. Positive (+): IN, EN
    b. Negative (–): GND
4. Connect Load to:
    a. Positive (+): OUT
    b. Negative (–): GND
5. Turn Power Supply on after making connections.
6. The MP1542 is enabled on the evaluation board once V_{IN} is applied. To disable the MP1542, disconnect EN from IN.
7. The output voltage V_{OUT} can be changed by varying R1. Calculate the new value using the fomula:

    $$R1 = \left(\frac{V_{OUT}}{V_{FB}} - 1 \right) R2$$

    Where V_{FB} = 1.25V and R2 = 10kΩ

    For example, for V_{OUT} = 12V

    $$R1 = \left(\frac{12V}{1.25V} - 1 \right) \times 10k\Omega = 86k\Omega$$

    Therefore use an 86.6kΩ standard 1% value.

    For output voltages greater than 10V, the output capacitor C2 needs to be replaced with a capacitor with a higher voltage rating suitable for the new output voltage.
8. The switching frequency is set to 1.3MHz if jumper JP1 is shunted between 1 and 2. To get 700KHz operation, shunt JP1 between 2 and 3.

NOTICE: The information in this document is subject to change without notice. Please contact MPS for current specifications. Users should warrant and guarantee that third party Intellectual Property rights are not infringed upon when integrating MPS products into any application. MPS will not assume any legal responsibility for any said applications.

MPS Proprietary Information. Unauthorized Photocopy and Duplication Prohibited.
© 2005 MPS. All Rights Reserved.