Tel: +44 1460 256 100
Fax: +44 1460 256 101
www.golledge.com

Golledge Electronics Ltd
Eaglewood Park, ILMINSTER
Somerset, TA19 9DQ, UK

SAW Filter 446.0MHz — Model: TA1120A
Part No: MP03334 — Rev No: 2

A. MAXIMUM RATING:

1. Input Power Level: 10dBm
2. DC Voltage: 5V
3. Operating Temperature: -30℃ to +60℃
4. Storage Temperature: -40℃ to +85℃

B. ELECTRICAL CHARACTERISTICS:

Item	Unit	Min.	Typ.	Max.
Center frequency Fc	MHz	-	446	-
Insertion loss (436 ~ 456MHz) IL	dB	-	3.2	4.2
Amplitude Ripple (436 ~ 456MHz)	dB	-	1.1	2.4
Return loss (436 ~ 456MHz)	dB	7	11	-
Attenuation (Reference level from 0dB)				
0.3 ~ 300MHz	dB	30	51	-
300 ~ 380MHz	dB	24	51	-
380 ~ 416MHz	dB	15	45	-
490.825 ~ 524.825MHz	dB	12	27	-
559.65 ~ 579.65MHz	dB	28	51	-
669.3 ~ 689.3MHz	dB	24	49	-
689.3 ~ 1000MHz	dB	26	45	-
Temperature Coefficient of Frequency	ppm/℃	-	-36	-

C. MEASUREMENT CIRCUIT:

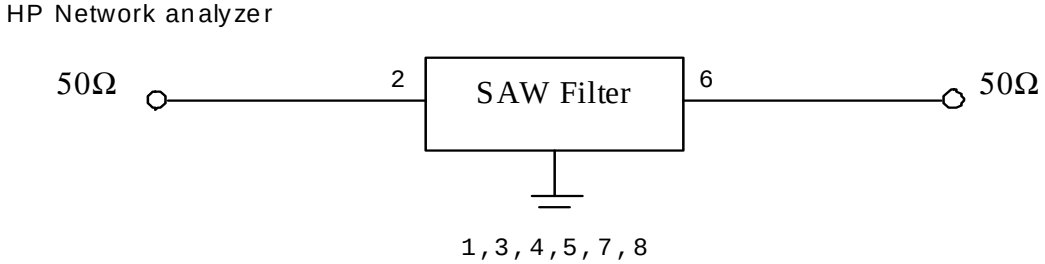

Tel: +44 1460 256 100
Fax: +44 1460 256 101
www.golledge.com

Golledge Electronics Ltd
Eaglewood Park, ILMINSTER
Somerset, TA19 9DQ, UK

D. OUTLINE DRAWING:

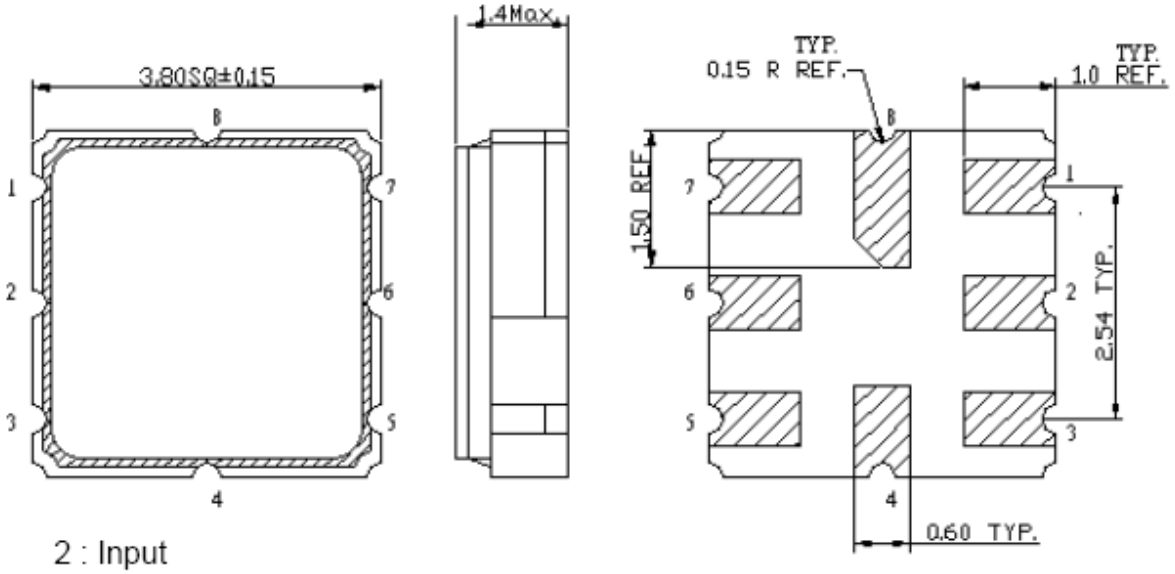

2 : Input
6: Output
1,3,4,5,7,8: Ground

E. PCB FOOTPRINT:

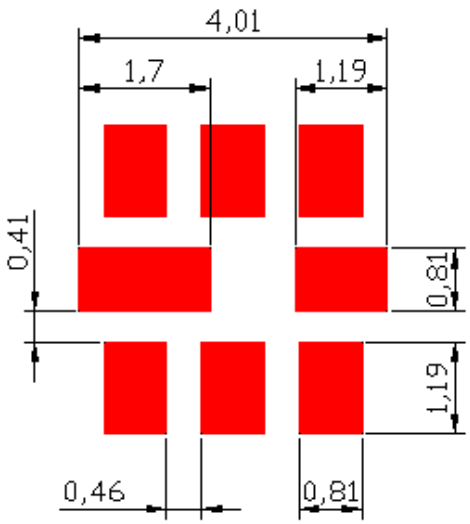

Tel: +44 1460 256 100
Fax: +44 1460 256 101
www.golledge.com

Golledge Electronics Ltd
Eaglewood Park, ILMINSTER
Somerset, TA19 9DQ, UK

SAW Filter 446.0MHz — Model: TA1120A
Part No: MP03334 — Rev No: 2

F. FREQUENCY CHARACTERISTICS:

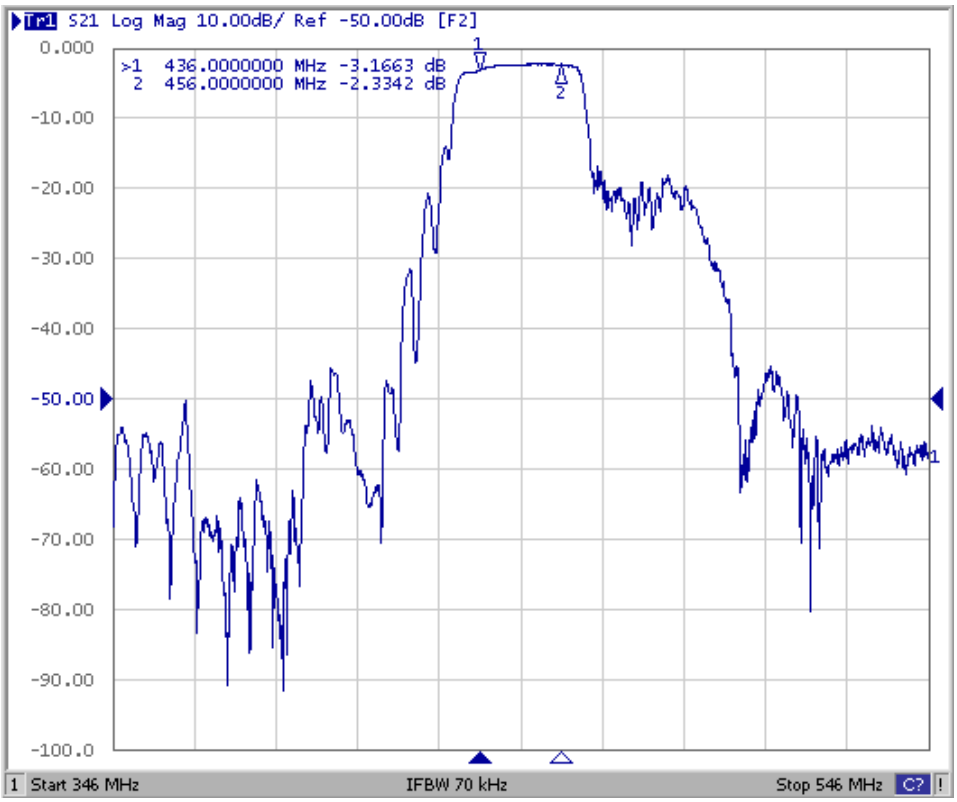

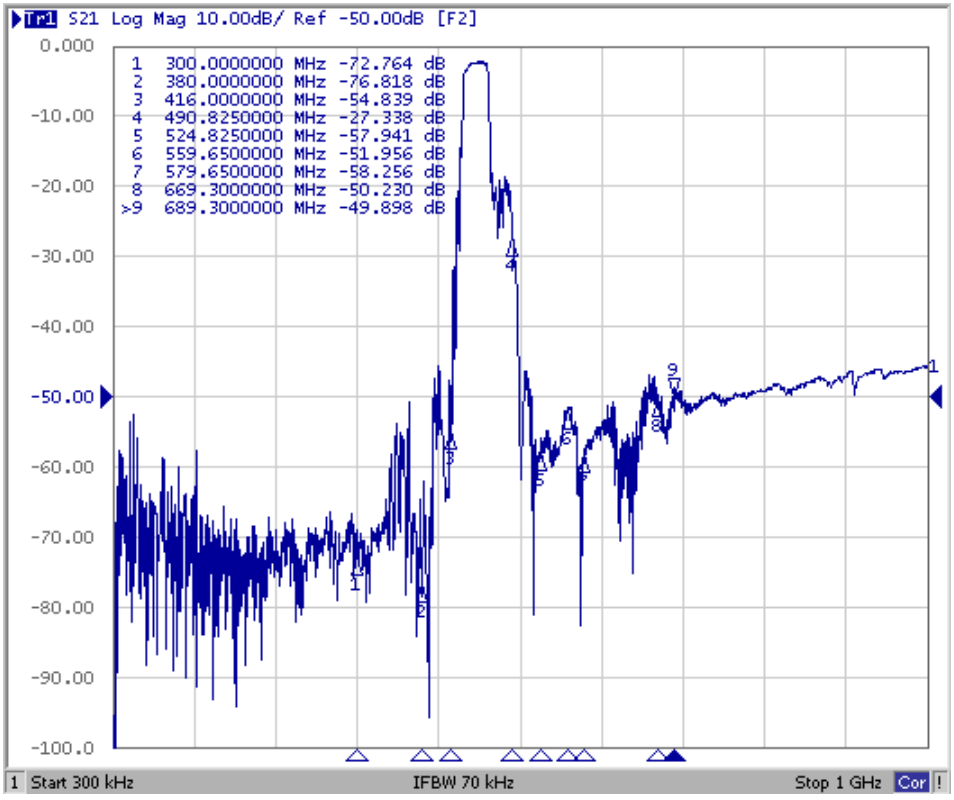

Tel: +44 1460 256 100
Fax: +44 1460 256 101
www.golledge.com

Golledge Electronics Ltd
Eaglewood Park, ILMINSTER
Somerset, TA19 9DQ, UK

G. PACKING:

1. REEL DIMENSION

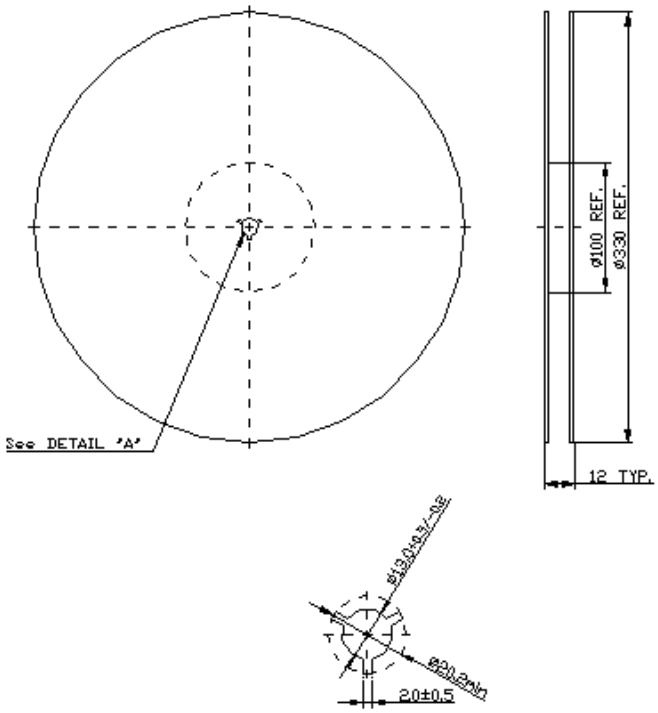

2. TAPE DIMENSION

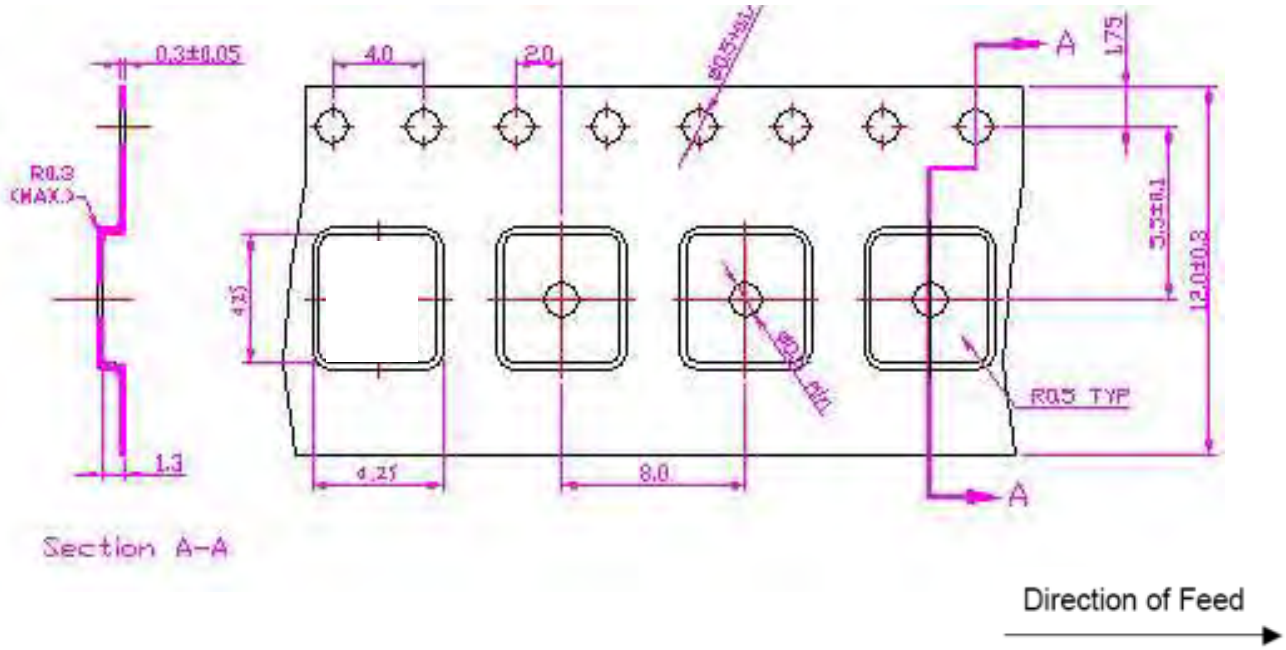

Tel: +44 1460 256 100
Fax: +44 1460 256 101
www.golledge.com

Golledge Electronics Ltd
Eaglewood Park, ILMINSTER
Somerset, TA19 9DQ, UK

H. RECOMMENDED REFLOW PROFILE:

