Mini-Mox

0.25 Watt and 0.5 Watt Precision Thick Film Axial Terminal High Voltage/High Resistance

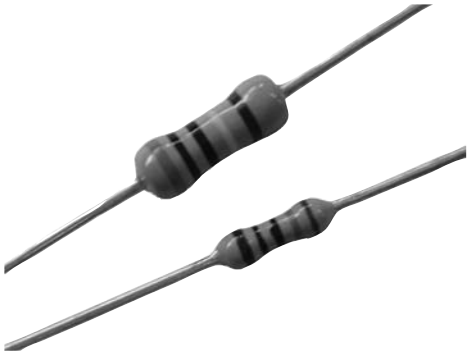

FEATURES

- RoHS compliant
- Wide resistance ranges
- Epoxy coating
- Metal oxide resistive element

APPLICATIONS

- Avionics
- Medical electronics
- High gain feedback applications
- Current pulse limiters
- Vacuum and space application

The Mini-Mox resistor is very versatile, covering a wide resistance range as well as a wide range of operating voltages. Provided with tolerances down to 1%, the Mini-Mox resistor works well in precision circuits.

SERIES SPECIFICATIONS

Ohmite Series	Resistance Range (Ohms)	Power @25°C	Voltage Rating	Available Tolerances*
MOX200	500K to 1,500M	0.25W	500V	0.1% to 20%
MOX300	500K to 2,500M	0.50W	1,000V	0.1% to 20%

*Some tolerances are not available over the entire resistance range.

CHARACTERISTICS

Resistor	Metal Oxide
Coating	Epoxy
Core	Alumina
Terminals	Solder-coated axial. RoHS solder composition is 96% Sn, 3.5% Ag, 0.5% Cu
Resistance Range	500K to 1,500MΩ
Power Rating	0.25W to 0.5W
Voltage Rating	500V to 1,000V
Tolerance	0.1% to 20%

Tolerance	Maximum Value Available MOX200	MOX300
0.10%	10MΩ	10MΩ
0.25%	10MΩ	10MΩ
0.50%	10MΩ	10MΩ
1%-20%	1500MΩ	2500MΩ

Operating Temperature	-55°C to +155°C
Max. Overload Voltage	1,000V (MOX200); 1,500V (MOX300)
Max. Pulse Voltage	1,500V (MOX200); 3,000V (MOX300)

Temp. Coeff. of Resistance

Series	100 PPM/°C	200 PPM/°C	300 PPM/°C
MOX200	500K-100MΩ	101M-1000MΩ	1001M-1500MΩ
MOX300	500K-100MΩ	101M-1000MΩ	1001M-2500MΩ

Characteristic	Test Method	Specification
Short time overload	Rated Power x2.5, 5 sec.	±0.5% max.
Resistance to soldering heat	260°C ±5°C, 10 ±1 sec.	±0.5% max.
Temperature cycling	-55°C/+155°C, 5 cycles	±0.5% max.
Withstanding voltage	500 VDC, 60 ±10 sec.	±0.5% max.
Insulation resistance	500 VDC	10,000MΩ or more
Moisture resistance	40°C ±2°C, 90-95%RH, 1000 hr.	±1.5% max.
Load life	70°C ±3°C, 1000 hr.	±2% max.

Derating

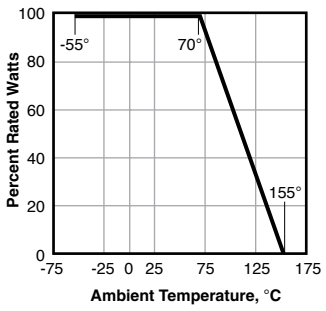

(continued)

Mini-Mox

0.25 Watt and 0.5 Watt
Precision Thick Film Axial Terminal
High Voltage/High Resistance

DIMENSIONS

(mm)

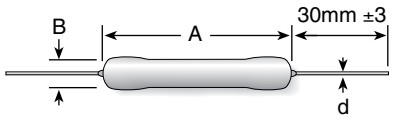

Series	Power Rating	A max. (in/mm)	B ±0.5mm (in/mm)	d ±0.05mm (in/mm)
MOX200	0.25W	0.26" / 6.5	0.09" / 2.2	0.024" / 0.6
MOX300	0.50W	0. 35" / 9	0.13" / 3.3	0.025" / 0.65

Tape and reel

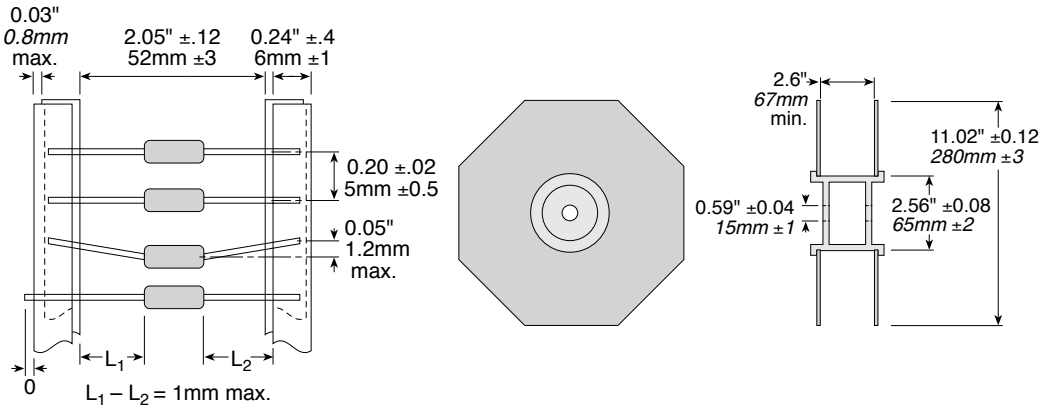

HOW TO ORDER

RoHS Compliant — **Tape and reel** 2500 qty./reel std.

M O X 2 0 0 0 0 1 0 0 3 F E R

Mini Mox Series
MOX-20000 or
MOX-30000

Ohms
First 3 digits are significant; 4th digit is multiplier (# of zeroes to follow). Examples:
10R2 = 10.2 ohms
1000 = 100 ohms
1503 = 150,000 ohms

Tolerance

B =	0.10%	G =	2%
C =	0.25%	J =	5%
D =	0.5%	K =	10%
F =	1%	M =	15%
		P =	20%