Pomona®

Model 3430
Adapter – Binding Post To BNC Male

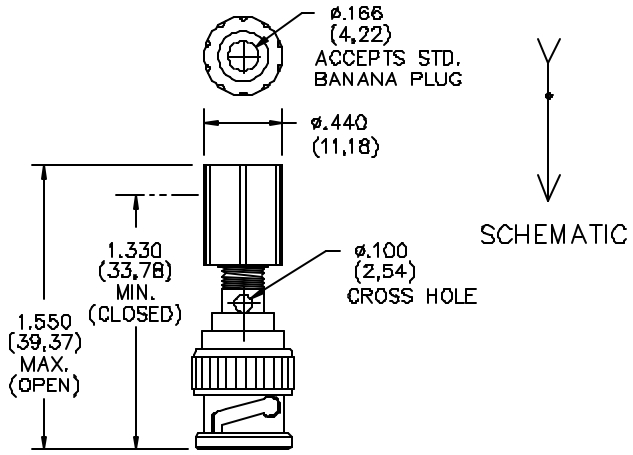

FEATURES:

- Permits single banana plug to be used with equipment having a BNC female.

MATERIALS:

Upper Conn: Insulated Binding Post

Material: Binding Post Body – Brass per QQ-B-626, Allow 360, ½ Hard.

Finish: Nickel plated per QQ-N-290, Class 2, 200/300 microinches.

Insulation: Polycarbonate.

Color: See Ordering Information.

Lower Conn.: BNC Male

Finish: Body and fittings – Tarnish Resistant.

Nominal Impedance: 50 Ohms.

RATINGS:

Operating Temp.: +115º C. (+239º F.) Max.

Operating Voltage: Hand-held Testing: 30VAC/60VDC Max.

Hands free Testing in Controlled Voltage Environments: 500 VRMS Max.

ORDERING INFORMATION: Model 3430-*

* = Color, -0 Black, -2 Red

Ordering Example: 3430-2 Color is Red

All dimensions are in inches. Tolerances (except noted): .xx = ±.02" (,51 mm), .xxx = ± .005" (,127 mm).
All specifications are to the latest revisions. Specifications are subject to change without notice.
Registered trademarks are the property of their respective companies. Made in USA

Sales: 800-490-2361 Fax: 888-403-3360
Technical Assistance: 800-241-2060

Pomona*ACCESS* **90575** (800) 444-6785 or (425) 446-6010
More drawings available at www.pomonaelectronics.com