MN4073B/MN4073BS

Triple 3-Input AND Gates

■ Description

The MN4073B/S are positive 3-input AND gates and have 3 circuits in a package.
The outputs are fully buffered to improve the propagation characteristics between the input and output which are affected by increasing load capacitance and minimizes propagation delay time. Their primary use is where low power dissipation and/or high noise immunity is desired.
The MN4073B/S are equivalent to MOTOROLA MN14073B and RCA CD4073B.

P-1

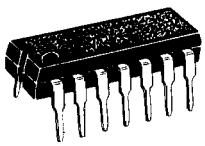

14-Pin • Plastic DIL Package

P-2



14-Pin • Panaflat Package (SO-14D)

■ Schematic Diagram (1/3)

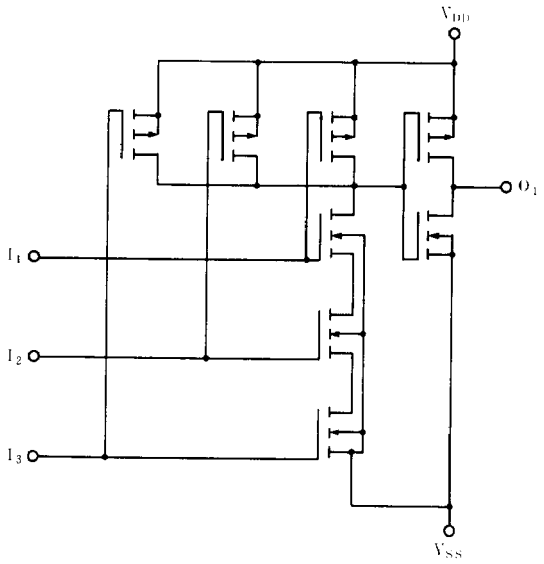

Pin Configuration

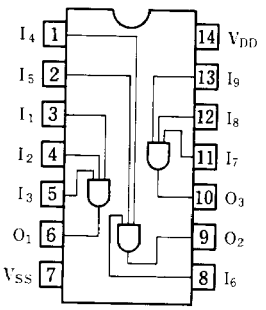

■ Maximum Ratings (Ta=25℃)

Item		Symbol	Ratings	Unit
Supply Voltage		V_{DD}	−0.5~+18	V
Input Voltage		V_I	−0.5~V_{DD}+0.5*	V
Output Voltage		V_O	−0.5~V_{DD}+0.5*	V
Peak Input · Output Current		$\pm I_I$	max. 10	mA
Power Dissipation (per package)	Ta=−40~+60℃	P_D	max. 400	mW
	Ta=+60~+85℃		Decrease up to 200mW rating at 8mW/°C	
Power Dissipation (per output terminal)		P_D	max. 100	mW
Operating Ambient Temperature		Topr	−40~+85	℃
Storage Temperature		Tstg	−65~+150	℃

* V_{DD} + 0.5V should be under 18V

■ DC Characteristics (V_{SS}=0V)

Item	V_{DD} (V)	Symbol	Conditions	Ta=−40℃ min.	Ta=−40℃ max.	Ta=25℃ min.	Ta=25℃ max.	Ta=85℃ min.	Ta=85℃ max.	Unit
Quiescent Power Supply Current	5	I_{DD}	V_I=V_{SS} or V_{DD}	—	1	—	1	—	7.5	μA
	10			—	2	—	2	—	15	
	15			—	4	—	4	—	30	
Output Voltage Low Level	5	V_{OL}	V_I=V_{SS} or V_{DD} $\lvert I_O\rvert$<1μA	—	0.05	—	0.05	—	0.05	V
	10			—	0.05	—	0.05	—	0.05	
	15			—	0.05	—	0.05	—	0.05	
Output Voltage High Level	5	V_{OH}	V_I=V_{SS} or V_{DD} $\lvert I_O\rvert$<1μA	4.95	—	4.95	—	4.95	—	V
	10			9.95	—	9.95	—	9.95	—	
	15			14.95	—	14.95	—	14.95	—	
Input Voltage Low Level	5	V_{IL}	$\lvert I_O\rvert$<1μA, V_O=0.5V or 4.5V	—	1.5	—	1.5	—	1.5	V
	10		$\lvert I_O\rvert$<1μA, V_O=1V or 9V	—	3	—	3	—	3	
	15		$\lvert I_O\rvert$<1μA, V_O=1.5V or 13.5V	—	4	—	4	—	4	
Input Voltage High Level	5	V_{IH}	$\lvert I_O\rvert$<1μA, V_O=0.5V or 4.5V	3.5	—	3.5	—	3.5	—	V
	10		$\lvert I_O\rvert$<1μA, V_O=1V or 9V	7	—	7	—	7	—	
	15		$\lvert I_O\rvert$<1μA, V_O=1.5V or 13.5V	11	—	11	—	11	—	
Output Current Low Level	5	I_{OL}	V_O=0.4V, V_I=0 or 5V	0.52	—	0.44	—	0.36	—	mA
	10		V_O=0.5V, V_I=0 or 10V	1.3	—	1.1	—	0.9	—	
	15		V_O=1.5V, V_I=0 or 15V	3.6	—	3	—	2.4	—	
Output Current High Level	5	$-I_{OH}$	V_O=4.6V, V_I=0 or 5V	0.52	—	0.44	—	0.36	—	mA
	10		V_O=9.5V, V_I=0 or 10V	1.3	—	1.1	—	0.9	—	
	15		V_O=13.5V, V_I=0 or 15V	3.6	—	3	—	2.4	—	
Output Current High Level	5	$-I_{OH}$	V_O=2.5V, V_I=0 or 5V	1.7	—	1.4	—	1.1	—	mA
Input Leakage Current	15	$\pm I_I$	V_I=0 or 15V	—	0.3	—	0.3	—	1	μA

■ Switching Characteristics (Ta=25℃, V_{SS}=0V, C_L=50pF)

Item	V_{DD} (V)	Symbol	min.	typ.	max.	Unit
Output Rise Time	5	t_{TLH}	—	60	180	ns
	10		—	30	90	
	15		—	20	60	
Output Fall Time	5	t_{THL}	—	60	180	ns
	10		—	30	90	
	15		—	20	60	
Propagation Delay Time	5	t_{PLH}	—	55	165	ns
	10		—	25	75	
	15		—	20	60	
Propagation Delay Time	5	t_{PHL}	—	45	135	ns
	10		—	20	60	
	15		—	15	45	
Input Capacitance		C_I	—	—	7.5	pF

1. Switching Time Test Circuit

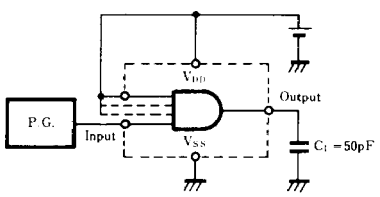

2. Waveforms

