Platinum Resistance Temperature Detector MN 222

MN- series PRTDs are designed for large volume applications where long term stability, interchangeability and accuracy over a large temperature range are vital. Typical applications are Automotive, White Goods, HVAC, Energy management, Medical and Industrial equipment.

Nominal Resistance R0	Tolerance DIN EN 60751 1996-07	Tolerance DIN EN 60751 2009-05	Order Number Plastic Bag
100 Ohm at 0℃	Class A Class B Class 2B	F 0.15 F 0.3 F 0.6	32 207 759 32 207 758 32 207 757
500 Ohm at 0℃	Class A Class B Class 2B	F 0.15 F 0.3 F 0.6	32 207 761 32 207 756 32 207 755
1000 Ohm at 0℃	Class A Class B Class 2B	F 0.15 F 0.3 F 0.6	32 207 754 32 207 753 32 207 751

The measuring point for the nominal resistance is defined at 8mm from the end of the sensor body.

Specification
DIN EN 60751 (according to IEC 751)

Temperature range
Tolerance Class A: -50℃ to +300℃
Tolerance Class B: -70℃ to +500℃
Tolerance Class 2B: -70℃ to +500℃

(temporary use at Cl. B and 2B to 550℃ possibl e)

Temperature coefficient
TCR = 3850 ppm/K

Leads
Ni- wire
Recommend connection technology:
Welding and Brazing

Lead lengths (L)
10mm ±1mm

Ambient conditions
Unhoused for dry environments only

Insulation resistance
> 100 MΩ at 20℃; > 2 M Ω at 500℃

Self heating
0.4 K/mW at 0℃

Response time
water current (v= 0.4m/s): $t_{0.5}$ = 0.05s
$t_{0.9}$ = 0.15s
air stream (v= 2m/s): $t_{0.5}$ = 3.0s
$t_{0.9}$ = 10.0s

Measuring current
100Ω:0.3 to 1.0mA
500Ω:0.1 to 0.7mA
1000Ω:0.1 bis 0.3mA
(self heating has to be considered)

Application advice
1. To avoid shear forces on the connection area, the connection wires may be neither split or bent. The bending may only take place 3 mm after the element, using a bending or splitting tool.
2. Other nominal values, lengths and temperature coefficients on request.
3. Due to a production-caused oxide layer coating the leads, soft-soldering is restricted.

Note
Other tolerances, values of resistance are available on request.

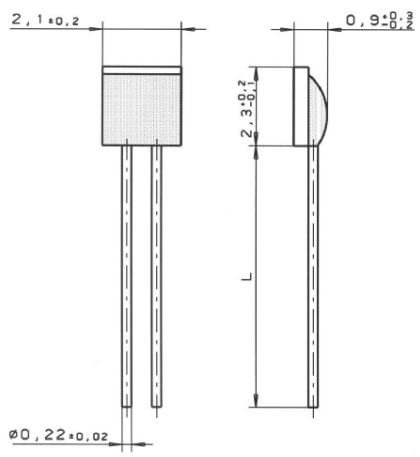

RoHS conform

We reserve the right to make alterations and technical data printed. All technical data serves as a guideline and does not guarantee particular properties to any products.

Heraeus Sensor Technology USA
1901 Route 130
North Brunswick, NJ 08902
Phone 732-940-4400 Fax 732-940-4445
Email info.hst-us@heraeus.com
www.hst-us.com

Name of document: 30910060 Index E
Status: 06/2013