NEW PRODUCT

MMSZ5263B

500mW SURFACE MOUNT ZENER DIODE

Please click here to visit our online spice models database.

Features

- Planar Die Construction
- 500mW Power Dissipation
- General Purpose, Medium Current
- Ideally Suited for Automated Assembly Processes
- **Lead, Halogen and Antimony Free, RoHS Compliant**
- **"Green" Device (Note 4)**
- **Qualified to AEC-Q101 Standards for High Reliability**

Mechanical Data

- Case: SOD-123
- Case Material: Molded Plastic, "Green" Molding Compound. UL Flammability Classification Rating 94V-0
- Moisture Sensitivity: Level 1 per J-STD-020
- Terminals: Matte Tin Finish annealed over Alloy 42 leadframe (Lead Free Plating). Solderable per MIL-STD-202, Method 208
- Polarity: Cathode Band
- Marking Information: See Page 2
- Ordering Information: See Page 2
- Weight: 0.01 grams (approximate)



Top View

Maximum Ratings @T_A = 25°C unless otherwise specified

Characteristic		Symbol	Value	Unit
Forward Voltage (Note 3)	@ I_F = 10mA	V_F	0.9	V

Thermal Characteristics

Characteristic	Symbol	Value	Unit
Power Dissipation (Note 1) @T_L = 75°C	P_D	500	mW
Thermal Resistance, Junction to Ambient Air (Note 1)	$R_{\theta JA}$	350	°C/W
Thermal Resistance, Junction to Lead (Note 2)	$R_{\theta JL}$	150	°C/W
Operating and Storage Temperature Range	T_J, T_{STG}	-65 to +150	°C

Electrical Characteristics @T_A = 25°C unless otherwise specified

Type Number	Type Code	Zener Voltage Range (Note 3)			Test Current	Maximum Zener Impedance (Note 5)		Maximum Reverse Leakage Current (Note 3)	
		V_Z @ I_{ZT}			I_{ZT}	Z_{ZT} @ I_{ZT}	Z_{ZK} @ I_{ZK} = 0.25mA	I_R	@ V_R
		Nom (V)	Min (V)	Max (V)	mA	Ω		µA	V
MMSZ5263B	M8	56	53.20	58.80	2.2	150	1300	0.1	43

Notes:
1. Device mounted on FR-4 substrate, single-sided, PC boards, with minimum recommended pad layout.
2. Thermal Resistance measurement obtained via infrared scan method.
3. Short duration pulse test used to minimize self-heating effect.
4. No purposefully added lead. Halogen and Antimony Free.
5. f = 1KHz.

© Diodes Incorporated

NEW PRODUCT

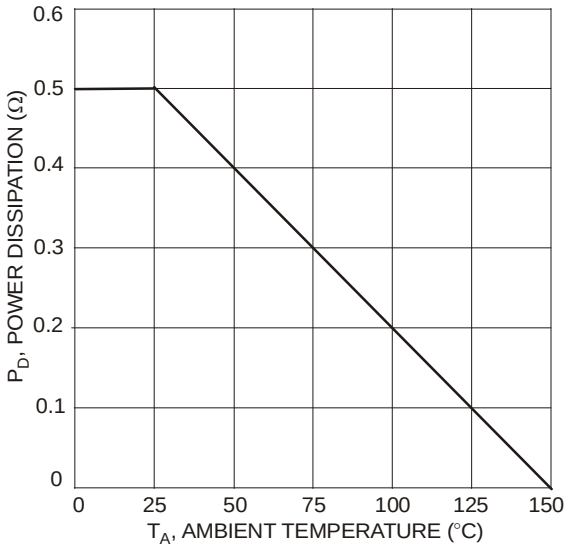

Fig. 1 Power Derating Curve

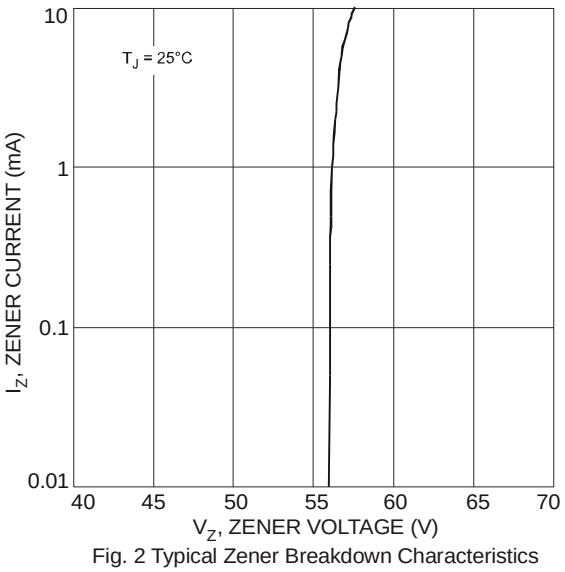

Fig. 2 Typical Zener Breakdown Characteristics

Ordering Information (Note 5)

Part Number	Packaging	Shipping
MMSZ5263B-7-F	SOD-123	3000/Tape & Reel

Notes: 5. For packaging details, go to our website at http://www.diodes.com/datasheets/ap02007.pdf.

Marking Information



M8 = Product Type Marking Code
(See Electrical Characteristics Table)
YM = Date Code Marking
Y = Year (ex: W = 2009)
M = Month (ex: 9 = September)

Date Code Key

Year	2009	2010	2011	2012	2013	2014	2015
Code	W	X	Y	Z	A	B	C

Month	Jan	Feb	Mar	Apr	May	Jun	Jul	Aug	Sep	Oct	Nov	Dec
Code	1	2	3	4	5	6	7	8	9	O	N	D

Package Outline Dimensions

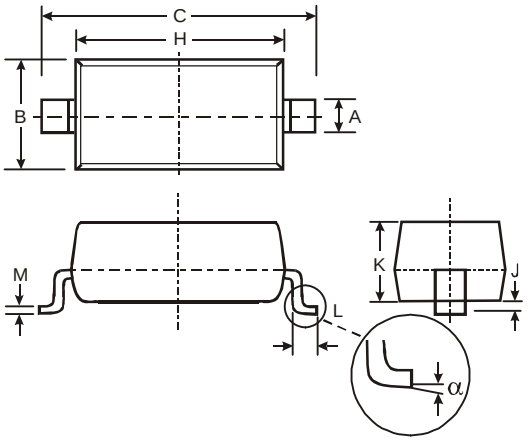

SOD-123		
Dim	Min	Max
A	0.55 Typ	
B	1.40	1.70
C	3.55	3.85
H	2.55	2.85
J	0.00	0.10
K	1.00	1.35
L	0.25	0.40
M	0.10	0.15
α	0	8°
All Dimensions in mm		

© Diodes Incorporated

NEW PRODUCT

Suggested Pad Layout

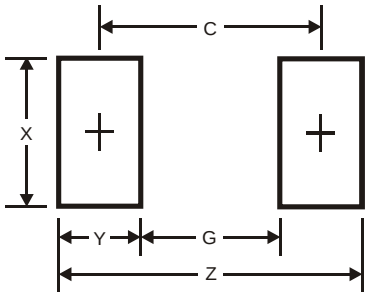

Dimensions	Value (in mm)
Z	4.9
G	2.5
X	0.7
Y	1.2
C	3.7

IMPORTANT NOTICE

DIODES INCORPORATED MAKES NO WARRANTY OF ANY KIND, EXPRESS OR IMPLIED, WITH REGARDS TO THIS DOCUMENT, INCLUDING, BUT NOT LIMITED TO, THE IMPLIED WARRANTIES OF MERCHANTABILITY AND FITNESS FOR A PARTICULAR PURPOSE (AND THEIR EQUIVALENTS UNDER THE LAWS OF ANY JURISDICTION).

Diodes Incorporated and its subsidiaries reserve the right to make modifications, enhancements, improvements, corrections or other changes without further notice to this document and any product described herein. Diodes Incorporated does not assume any liability arising out of the application or use of this document or any product described herein; neither does Diodes Incorporated convey any license under its patent or trademark rights, nor the rights of others. Any Customer or user of this document or products described herein in such applications shall assume all risks of such use and will agree to hold Diodes Incorporated and all the companies whose products are represented on Diodes Incorporated website, harmless against all damages.

Diodes Incorporated does not warrant or accept any liability whatsoever in respect of any products purchased through unauthorized sales channel. Should Customers purchase or use Diodes Incorporated products for any unintended or unauthorized application, Customers shall indemnify and hold Diodes Incorporated and its representatives harmless against all claims, damages, expenses, and attorney fees arising out of, directly or indirectly, any claim of personal injury or death associated with such unintended or unauthorized application.

Products described herein may be covered by one or more United States, international or foreign patents pending. Product names and markings noted herein may also be covered by one or more United States, international or foreign trademarks.

LIFE SUPPORT

Diodes Incorporated products are specifically not authorized for use as critical components in life support devices or systems without the express written approval of the Chief Executive Officer of Diodes Incorporated. As used herein:

A. Life support devices or systems are devices or systems which:

1. are intended to implant into the body, or
2. support or sustain life and whose failure to perform when properly used in accordance with instructions for use provided in the labeling can be reasonably expected to result in significant injury to the user.

B. A critical component is any component in a life support device or system whose failure to perform can be reasonably expected to cause the failure of the life support device or to affect its safety or effectiveness.

Customers represent that they have all necessary expertise in the safety and regulatory ramifications of their life support devices or systems, and acknowledge and agree that they are solely responsible for all legal, regulatory and safety-related requirements concerning their products and any use of Diodes Incorporated products in such safety-critical, life support devices or systems, notwithstanding any devices- or systems-related information or support that may be provided by Diodes Incorporated. Further, Customers must fully indemnify Diodes Incorporated and its representatives against any damages arising out of the use of Diodes Incorporated products in such safety-critical, life support devices or systems.

Copyright © 2009, Diodes Incorporated

www.diodes.com