MMSZ5221BS – MMSZ5262BS

200mW SURFACE MOUNT ZENER DIODE

Features

- Planar Die Construction
- 200mW Power Dissipation
- 2.4 – 51V Nominal Zener Voltage
- 5% Standard Vz Tolerance
- Designed for Surface Mount Application
- Plastic Material – UL Recognition Flammability Classification 94V-O

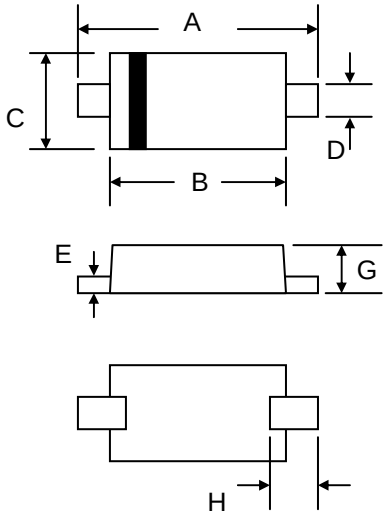

SOD-323		
Dim	**Min**	**Max**
A	2.30	2.70
B	1.75	1.95
C	1.15	1.35
D	0.25	0.35
E	0.05	0.15
G	0.70	0.95
H	0.30	—
All Dimensions in mm		

Mechanical Data

- Case: SOD-323, Molded Plastic
- Terminals: Plated Leads Solderable per MIL-STD-202, Method 208
- Polarity: Cathode Band
- Weight: 0.004 grams (approx.)
- Marking: Device Code, See Page 2
- **Lead Free: For RoHS / Lead Free Version, Add "-LF" Suffix to Part Number, See Page 4**

Maximum Ratings @T_A=25°C unless otherwise specified

Characteristic	Symbol	Value	Unit
Peak Pulse Power Dissipation at T_A = 25°C (Note 1)	P_d	200	mW
Forward Voltage @ I_F = 10mA	V_F	0.9	V
Thermal Resistance Junction to Ambient (Note 1)	$R_{\theta JA}$	625	°C/W
Operating and Storage Temperature Range	T_j, T_{STG}	-65 to +150	°C

Note: 1. Valid provided that device terminals are kept at ambient temperature.

© 2006 Won-Top Electronics

Electrical Characteristics @T_A=25°C unless otherwise specified

Type Number (Note 1)	Device Marking Code	Zener Voltage Range (Note 2)			Maximum Zener Impedance (Note 3)				Max Reverse Leakage Current		Typical Temp. Coefficient of Zener Voltage
		V_Z @ I_{ZT}			Z_{ZT} @ I_{ZT}		Z_{ZK} @ I_{ZK}		I_R	@ V_R	
		Nom (V)	Min (V)	Max (V)	(Ω)	(mA)	(Ω)	(mA)	(μA)	(V)	(%/K)
MMSZ5221BS	C1	2.4	2.28	2.52	30	20	1200	0.25	100	1.0	-0.075
MMSZ5222BS	C2	2.5	2.38	2.63	30	20	1250	0.25	100	1.0	-0.075
MMSZ5223BS	C3	2.7	2.57	2.84	30	20	1300	0.25	75	1.0	-0.075
MMSZ5225BS	C5	3.0	2.85	3.15	30	20	1600	0.25	50	1.0	-0.075
MMSZ5226BS	D1	3.3	3.14	3.47	28	20	1600	0.25	25	1.0	-0.070
MMSZ5227BS	D2	3.6	3.42	3.78	24	20	1700	0.25	15	1.0	-0.065
MMSZ5228BS	D3	3.9	3.71	4.10	23	20	1900	0.25	10	1.0	-0.060
MMSZ5229BS	D4	4.3	4.09	4.52	22	20	2000	0.25	5.0	1.0	-0.055
MMSZ5230BS	D5	4.7	4.47	4.94	19	20	1900	0.25	5.0	2.0	±0.030
MMSZ5231BS	E1	5.1	4.85	5.36	17	20	1600	0.25	5.0	2.0	±0.030
MMSZ5232BS	E2	5.6	5.32	5.88	11	20	1600	0.25	5.0	3.0	+0.038
MMSZ5234BS	E4	6.2	5.89	6.51	7.0	20	1000	0.25	5.0	4.0	+0.045
MMSZ5235BS	E5	6.8	6.46	7.14	5.0	20	750	0.25	3.0	5.0	+0.050
MMSZ5236BS	F1	7.5	7.13	7.88	6.0	20	500	0.25	3.0	6.0	+0.058
MMSZ5237BS	F2	8.2	7.79	8.61	8.0	20	500	0.25	3.0	6.0	+0.062
MMSZ5239BS	F4	9.1	8.65	9.56	10	20	600	0.25	3.0	6.5	+0.068
MMSZ5240BS	F5	10	9.50	10.50	17	20	600	0.25	3.0	8.0	+0.075
MMSZ5241BS	H1	11	10.45	11.55	22	20	600	0.25	2.0	8.4	+0.076
MMSZ5242BS	H2	12	11.40	12.60	30	20	600	0.25	1.0	9.1	+0.077
MMSZ5243BS	H3	13	12.35	13.65	13	9.5	600	0.25	0.5	9.9	+0.079
MMSZ5245BS	H5	15	14.25	15.75	16	8.5	600	0.25	0.1	11	+0.082
MMSZ5246BS	J1	16	15.20	16.80	17	7.8	600	0.25	0.1	12	+0.083
MMSZ5248BS	J3	18	17.10	18.90	21	7.0	600	0.25	0.1	14	+0.085
MMSZ5250BS	J5	20	19.00	21.00	25	6.2	600	0.25	0.1	15	+0.086
MMSZ5251BS	K1	22	20.90	23.10	29	5.6	600	0.25	0.1	17	+0.087
MMSZ5252BS	K2	24	22.80	25.20	33	5.2	600	0.25	0.1	18	+0.087
MMSZ5254BS	K4	27	25.65	28.35	41	5.0	600	0.25	0.1	21	+0.090
MMSZ5255BS	K5	28	26.60	29.40	44	4.5	600	0.25	0.1	21	+0.091
MMSZ5256BS	M1	30	28.50	31.50	49	4.2	600	0.25	0.1	23	+0.091
MMSZ5257BS	M2	33	31.35	34.65	58	3.8	700	0.25	0.1	25	+0.092
MMSZ5258BS	M3	36	34.20	37.80	70	3.4	700	0.25	0.1	27	+0.093
MMSZ5259BS	M4	39	37.05	40.95	80	3.2	800	0.25	0.1	30	+0.094
MMSZ5260BS	M5	43	40.85	45.15	93	3.0	900	0.25	0.1	33	+0.095
MMSZ5261BS	N1	47	44.65	49.35	105	2.7	1000	0.25	0.1	36	+0.095
MMSZ5262BS	N2	51	48.45	53.55	125	2.5	1100	0.25	0.1	39	+0.096

Note: 1. Type numbers listed have standard tolerance on the nominal zener voltage of ±5%.
2. Measured with pulses t_p = 1ms.
3. f = 1KHz

© 2006 Won-Top Electronics

MARKING INFORMATION



Cathode = Polarity Band
xx = Device Code, See Page 2

RECOMMENDED FOOTPRINT

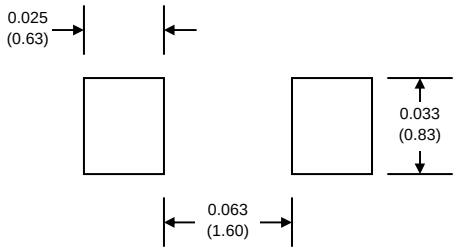

inches(mm)

PACKAGING INFORMATION

TAPE & REEL

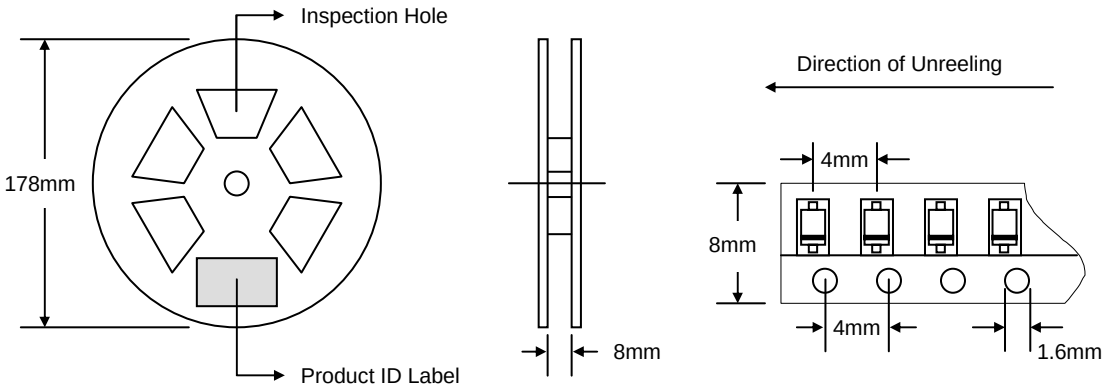

Reel Diameter (mm)	Quantity (PCS)	Inner Box Size L x W x H (mm)	Quantity (PCS)	Carton Size L x W x H (mm)	Quantity (PCS)	Approx. Gross Weight (KG)
178	5,000	187 x 187 x 65	25,000	390 x 240 x 420	250,000	10.0

Note: 1. Anti-static plastic reel, white, water clear or blue color. Inspection hole might be varied in different alignment.
2. Components are packed in accordance with EIA standard 481-1 and 481-2.

 © 2006 Won-Top Electronics

ORDERING INFORMATION

Product No.	Package Type	Shipping Quantity
MMSZ52xxBS-T1	SOD-323	5000/Tape & Reel

1. Shipping quantity given is for minimum packing quantity only. For minimum order quantity, please consult the Sales Department.
2. **To order RoHS / Lead Free version (with Lead Free finish), add "-LF" suffix to part number above. For example, MMSZ5221BS-T1-LF**.

Won-Top Electronics Co., Ltd (WTE) has checked all information carefully and believes it to be correct and accurate. However, WTE cannot assume any responsibility for inaccuracies. Furthermore, this information does not give the purchaser of semiconductor devices any license under patent rights to manufacturer. WTE reserves the right to change any or all information herein without further notice.

WARNING: DO NOT USE IN LIFE SUPPORT EQUIPMENT. WTE power semiconductor products are not authorized for use as critical components in life support devices or systems without the express written approval.

Won-Top Electronics Co., Ltd.
No. 44 Yu Kang North 3rd Road, Chine Chen Dist., Kaohsiung, Taiwan
Phone: 886-7-822-5408 or 886-7-822-5410
Fax: 886-7-822-5417
Email: sales@wontop.com
Internet: http://www.wontop.com

We power your everyday.

 © 2006 Won-Top Electronics