MMBD4448HT /HTA /HTC /HTS

SURFACE MOUNT FAST SWITCHING DIODE

Please click here to visit our online spice models database.

Features

- Ultra-Small Surface Mount Package
- Fast Switching Speed
- For General Purpose Switching Applications
- High Conductance
- **Lead Free/RoHS Compliant (Note 2)**
- **"Green" Device (Notes 3 and 4)**

Mechanical Data

- Case: SOT-523
- Case Material: Molded Plastic, "Green" Molding Compound. UL Flammability Classification Rating 94V-0
- Moisture Sensitivity: Level 1 per J-STD-020D
- Terminals: Solderable per MIL-STD-202, Method 208
- Lead Free Plating (Matte Tin Finish annealed over Alloy 42 leadframe).
- Polarity: See Diagrams Below
- Marking Information: See Diagrams Below & Page 2
- Ordering Information: See Page 2
- Weight: 0.002 grams (approximate)

SOT-523



TOP VIEW

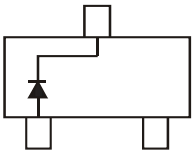

MMBD4448HT Marking: A3

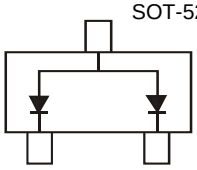

MMBD4448HTA Marking: A6

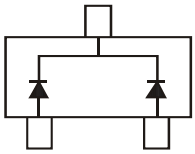

MMBD4448HTC Marking: A7

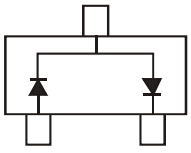

MMBD4448HTS Marking: AB

Maximum Ratings @T_A = 25°C unless otherwise specified

Characteristic		Symbol	Value	Unit
Non-Repetitive Peak Reverse Voltage		V_{RM}	100	V
Peak Repetitive Reverse Voltage Working Peak Reverse Voltage DC Blocking Voltage		V_{RRM} V_{RWM} V_R	80	V
RMS Reverse Voltage		$V_{R(RMS)}$	57	V
Forward Continuous Current	(Note 1)	I_{FM}	500	mA
Average Rectified Output Current	(Note 1)	I_O	250	mA
Non-Repetitive Peak Forward Surge Current	@ t = 1.0μs @ t = 1.0s	I_{FSM}	4.0 2.0	A

Thermal Characteristics

Characteristic		Symbol	Value	Unit
Power Dissipation	(Note 1)	P_D	150	mW
Thermal Resistance Junction to Ambient	(Note 1)	$R_{\theta JA}$	833	°C/W
Operating and Storage Temperature Range		T_J, T_{STG}	-65 to +150	°C

Electrical Characteristics @T_A = 25°C unless otherwise specified

Characteristic		Symbol	Min	Max	Unit	Test Condition
Reverse Breakdown Voltage	(Note 5)	$V_{(BR)R}$	80	—	V	I_R = 2.5μA
Forward Voltage		V_F	0.62 — — —	0.72 0.855 1.0 1.25	V	I_F = 5.0mA I_F = 10mA I_F = 100mA I_F = 150mA
Leakage Current	(Note 5)	I_R	—	100 50 30 25	nA μA μA nA	V_R = 70V V_R = 75V, T_J = 150°C V_R = 25V, T_J = 150°C V_R = 20V
Total Capacitance		C_T	—	3.5	pF	V_R = 6V, f = 1.0MHz
Reverse Recovery Time		t_{rr}	—	4.0	ns	V_R = 6V, I_F = 5mA

Notes:
1. Device mounted on FR-4 PC board with recommended pad layout, which can be found on our website at http://www.diodes.com/datasheets/ap02001.pdf.
2. No purposefully added lead.
3. Diodes Inc.'s "Green" policy can be found on our website at http://www.diodes.com/products/lead_free/index.php.
4. Product manufactured with Date Code UO (week 40, 2007) and newer are built with Green Molding Compound. Product manufactured prior to Date Code UO are built with Non-Green Molding Compound and may contain Halogens or Sb2O3 Fire Retardants.
5. Short duration pulse test used to minimize self-heating effect.

© Diodes Incorporated

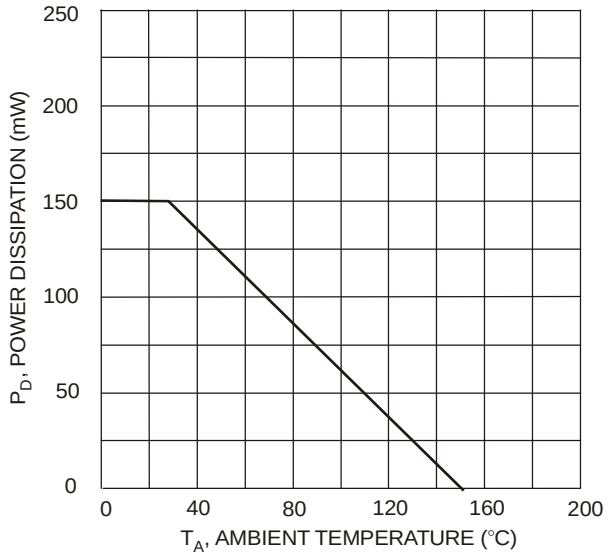

Fig. 1 Power Derating Curve, Total Package

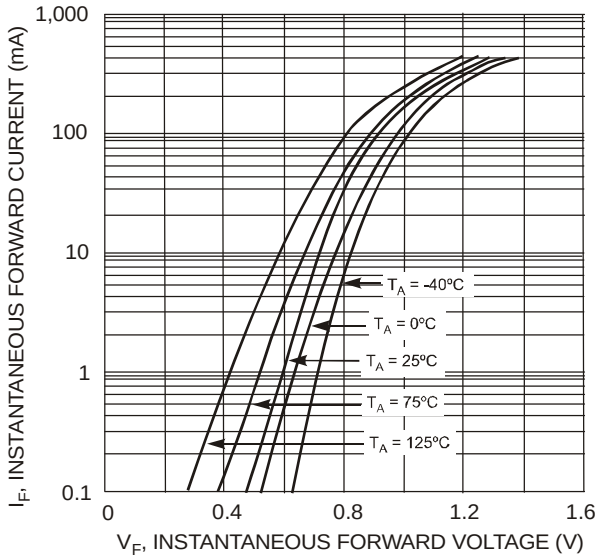

Fig. 2 Typical Forward Characteristics, Per Element

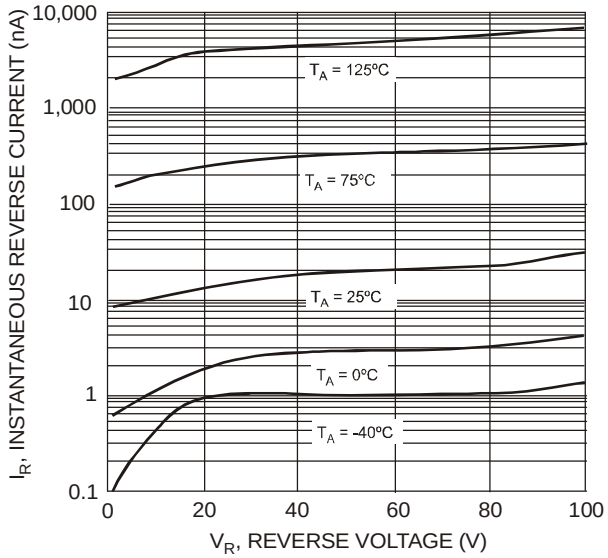

Fig. 3 Typical Reverse Characteristics, Per Element

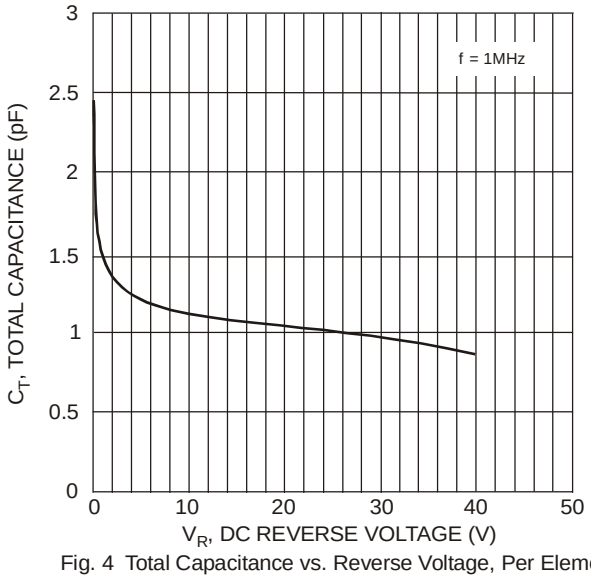

Fig. 4 Total Capacitance vs. Reverse Voltage, Per Element

Ordering Information (Note 6)

Part Number	Case	Packaging
MMBD4448HT-7-F	SOT-523	3000/Tape & Reel
MMBD4448HTA-7-F	SOT-523	3000/Tape & Reel
MMBD4448HTC-7-F	SOT-523	3000/Tape & Reel
MMBD4448HTS-7-F	SOT-523	3000/Tape & Reel

Notes: 6. For packaging details, go to our website at http://www.diodes.com/datasheets/ap02007.pdf.

Marking Information

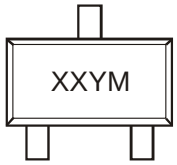

xx = Product Type Marking Code (See Page 1 Diagrams)
YM = Date Code Marking
Y = Year (ex: N = 2002)
M = Month (ex: 9 = September)

Date Code Key

Year	2001	2002	2003	2004	2005	2006	2007	2008	2009	2010	2011	2012
Code	M	N	P	R	S	T	U	V	W	X	Y	Z

Month	Jan	Feb	Mar	Apr	May	Jun	Jul	Aug	Sep	Oct	Nov	Dec
Code	1	2	3	4	5	6	7	8	9	O	N	D

© Diodes Incorporated

Package Outline Dimensions

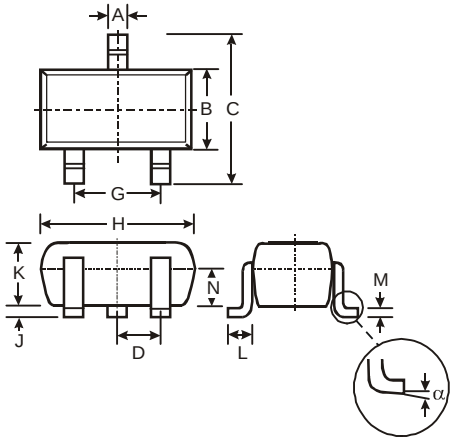

SOT-523			
Dim	**Min**	**Max**	**Typ**
A	0.15	0.30	0.22
B	0.75	0.85	0.80
C	1.45	1.75	1.60
D	—	—	0.50
G	0.90	1.10	1.00
H	1.50	1.70	1.60
J	0.00	0.10	0.05
K	0.60	0.80	0.75
L	0.10	0.30	0.22
M	0.10	0.20	0.12
N	0.45	0.65	0.50
α	0°	8°	—
All Dimensions in mm			

Suggested Pad Layout

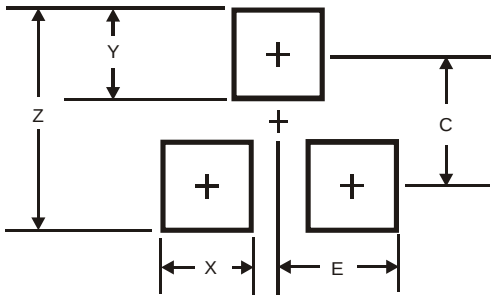

Dimensions	Value (in mm)
Z	1.8
X	0.4
Y	0.51
C	1.3
E	0.7

IMPORTANT NOTICE

Diodes Incorporated and its subsidiaries reserve the right to make modifications, enhancements, improvements, corrections or other changes without further notice to any product herein. Diodes Incorporated does not assume any liability arising out of the application or use of any product described herein; neither does it convey any license under its patent rights, nor the rights of others. The user of products in such applications shall assume all risks of such use and will agree to hold Diodes Incorporated and all the companies whose products are represented on our website, harmless against all damages.

LIFE SUPPORT

Diodes Incorporated products are not authorized for use as critical components in life support devices or systems without the expressed written approval of the President of Diodes Incorporated.

© Diodes Incorporated