FAIRCHILD SEMICONDUCTOR®

September 1983
Revised May 2005

MM74HC573
3-STATE Octal D-Type Latch

General Description

The MM74HC573 high speed octal D-type latches utilize advanced silicon-gate P-well CMOS technology. They possess the high noise immunity and low power consumption of standard CMOS integrated circuits, as well as the ability to drive 15 LS-TTL loads. Due to the large output drive capability and the 3-STATE feature, these devices are ideally suited for interfacing with bus lines in a bus organized system.

When the LATCH ENABLE(LE) input is HIGH, the Q outputs will follow the D inputs. When the LATCH ENABLE goes LOW, data at the D inputs will be retained at the outputs until LATCH ENABLE returns HIGH again. When a HIGH logic level is applied to the OUTPUT CONTROL OC input, all outputs go to a HIGH impedance state, regardless of what signals are present at the other inputs and the state of the storage elements.

The 74HC logic family is speed, function and pinout compatible with the standard 74LS logic family. All inputs are protected from damage due to static discharge by internal diode clamps to V_{CC} and ground.

Features

- Typical propagation delay: 18 ns
- Wide operating voltage range: 2 to 6 volts
- Low input current: 1 μA maximum
- Low quiescent current: 80 μA maximum (74HC Series)
- Compatible with bus-oriented systems
- Output drive capability: 15 LS-TTL loads

Ordering Code:

Order Number	Package Number	Package Description
MM74HC573WM	M20B	20-Lead Small Outline Integrated Circuit (SOIC), JEDEC MS-013, 0.300" Wide
MM74HC573SJ	M20D	20-Lead Small Outline Package (SOP), EIAJ TYPE II, 5.3mm Wide
MM74HC573MTC	MTC20	20-Lead Thin Shrink Small Outline Package (TSSOP), JEDEC MO-153, 4.4mm Wide
MM74HC573N	N20A	20-Lead Plastic Dual-In-Line Package (PDIP), JEDEC MS-001, 0.300" Wide

Devices also available in Tape and Reel. Specify by appending the suffix letter "X" to the ordering code.

Connection Diagram

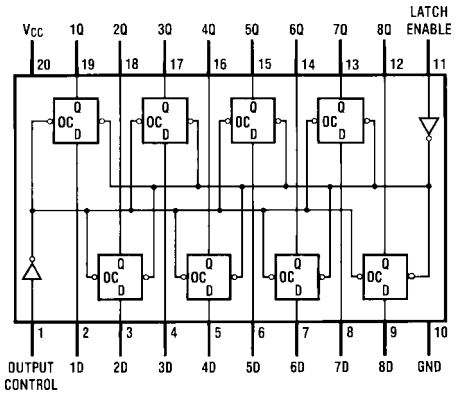

Top View

Truth Table

Output Control	Latch Enable	Data	Output
L	H	H	H
L	H	L	L
L	L	X	Q_0
H	X	X	Z

H = HIGH Level
L = LOW Level
Q_0 = Level of output before steady-state input conditions were established.
Z = High Impedance
X = Don't Care

© 2005 Fairchild Semiconductor Corporation

Absolute Maximum Ratings (Note 1)

(Note 2)

Supply Voltage (V_{CC})	−0.5 to +7.0V
DC Input Voltage (V_{IN})	−1.5 to V_{CC} +1.5V
DC Output Voltage (V_{OUT})	−0.5 to V_{CC} +0.5V
Clamp Diode Current (I_{IK}, I_{OK})	±20 mA
DC Output Current, per pin (I_{OUT})	±35 mA
DC V_{CC} or GND Current, per pin (I_{CC})	±70 mA
Storage Temperature Range (T_{STG})	−65°C to +150°C
Power Dissipation (P_D)	
(Note 3)	600 mW
S.O. Package only	500 mW
Lead Temperature (T_L)	
(Soldering 10 seconds)	260°C

Recommended Operating Conditions

	Min	Max	Units
Supply Voltage (V_{CC})	2	6	V
DC Input or Output Voltage (V_{IN}, V_{OUT})	0	V_{CC}	V
Operating Temperature Range (T_A)	−40	+85	°C
Input Rise or Fall Times			
(t_r, t_f) V_{CC} = 2.0V		1000	ns
V_{CC} = 4.5V		500	ns
V_{CC} = 6.0V		400	ns

Note 1: Absolute Maximum Ratings are those values beyond which damage to the device may occur.

Note 2: Unless otherwise specified all voltages are referenced to ground.

Note 3: Power Dissipation temperature derating — plastic "N" package: –12 mW/°C from 65°C to 85°C.

DC Electrical Characteristics (Note 4)

Symbol	Parameter	Conditions	V_{CC}	T_A = 25°C	T_A = −40 to 85°C	T_A = −55 to 125°C	Units
				Typ	Guaranteed Limits		
V_{IH}	Minimum HIGH Level Input Voltage		2.0V		1.5	1.5	1.5	V
			4.5V		3.15	3.15	3.15	V
			6.0V		4.2	4.2	4.2	V
V_{IL}	Maximum LOW Level Input Voltage		2.0V		0.5	0.5	0.5	V
			4.5V		1.35	1.35	1.35	V
			6.0V		1.8	1.8	1.8	V
V_{OH}	Minimum HIGH Level Output Voltage	V_{IN} = V_{IH} or V_{IL}						
		$\|I_{OUT}\| \le 20$ μA	2.0V	2.0	1.9	1.9	1.9	V
			4.5V	4.5	4.4	4.4	4.4	V
			6.0V	6.0	5.9	5.9	5.9	V
		V_{IN} = V_{IH} or V_{IL}						
		$\|I_{OUT}\| \le 6.0$ mA	4.5V	4.2	3.98	3.84	3.7	V
		$\|I_{OUT}\| \le 7.8$ mA	6.0V	5.7	5.48	5.34	5.2	V
V_{OL}	Maximum LOW Level Output Voltage	V_{IN} = V_{IH} or V_{IL}						
		$\|I_{OUT}\| \le 20$ μA	2.0V	0	0.1	0.1	0.1	V
			4.5V	0	0.1	0.1	0.1	V
			6.0V	0	0.1	0.1	0.1	V
		V_{IN} = V_{IH} or V_{IL}						
		$\|I_{OUT}\| \le 6.0$ mA	4.5V	0.2	0.26	0.33	0.4	V
		$\|I_{OUT}\| \le 7.8$ mA	6.0V	0.2	0.26	0.33	0.4	V
I_{IN}	Maximum Input Current	V_{IN} = V_{CC} or GND	6.0V		±0.1	±1.0	±1.0	μA
I_{OZ}	Maximum 3-STATE Output Leakage Current	V_{OUT} = V_{CC} or GND OC = V_{IH}	6.0V		±0.5	±5.0	±10	μA
I_{CC}	Maximum Quiescent Supply Current	V_{IN} = V_{CC} or GND I_{OUT} = 0 μA	6.0V		8.0	80	160	μA
ΔI_{CC}	Quiescent Supply Current per Input Pin	V_{CC} = 5.5V V_{IN} = 2.4V or 0.4V (Note 4)	OE	1.0	1.5	1.8	2.0	mA
			LE	0.6	0.8	1.0	1.1	mA
			DATA	0.4	0.5	0.6	0.7	mA

Note 4: For a power supply of 5V ±10% the worst-case output voltages (V_{OH}, and V_{OL}) occur for HC at 4.5V. Thus the 4.5V values should be used when designing with this supply. Worst-case V_{IH} and V_{IL} occur at V_{CC} = 5.5V and 4.5V respectively. (The V_{IH} value at 5.5V is 3.85V.) The worst-case leakage current (I_{IN}, I_{CC}, and I_{OZ}) occur for CMOS at the higher voltage and so the 6.0V values should be used.

AC Electrical Characteristics

V_{CC} = 5V, T_A = 25°C, t_r = t_f = 6 ns

Symbol	Parameter	Conditions	Typ	Guaranteed Limit	Units
t_{PHL}, t_{PLH}	Maximum Propagation Delay, Data to Q	C_L = 45 pF	16	20	ns
t_{PHL}, t_{PLH}	Maximum Propagation Delay, LE to Q	C_L = 45 pF	14	22	ns
t_{PZH}, t_{PZL}	Maximum Output Enable Time	R_L = 1 kΩ C_L = 45 pF	15	27	ns
t_{PHZ}, t_{PLZ}	Maximum Output Disable Time	R_L = 1 kΩ C_L = 5 pF	13	23	ns
t_S	Minimum Set Up Time, Data to LE		10	15	ns
t_H	Minimum Hold Time, LE to Data		2	5	ns
t_W	Minimum Pulse Width, LE or Data		10	16	ns

AC Electrical Characteristics

Symbol	Parameter	Conditions	V_{CC}	T_A = 25°C	T_A = −40 to 85°C	T_A = −55 to 125°C		Units
				Typ	Guaranteed Limits			
t_{PHL}, t_{PLH}	Maximum Propagation Delay Data to Q	C_L = 50 pF	2.0V	45	110	138	165	ns
		C_L = 150 pF	2.0V	58	150	188	225	ns
		C_L = 50 pF	4.5V	17	22	28	33	ns
		C_L = 150 pF	4.5V	21	30	38	40	ns
		C_L = 50 pF	6.0V	15	19	24	29	ns
		C_L = 150 pF	6.0V	19	26	33	39	ns
t_{PHL}, t_{PLH}	Maximum Propagation Delay, LE to Q	C_L = 50 pF	2.0V	46	115	138	165	ns
		C_L = 150 pF	2.0V	60	155	194	233	ns
		C_L = 50 pF	4.5V	14	23	29	35	ns
		C_L = 150 pF	4.5V	21	31	47	47	ns
		C_L = 50 pF	6.0V	12	20	25	30	ns
		C_L = 150 pF	6.0V	19	27	34	41	ns
t_{PZH}, t_{PZL}	Maximum Output Enable Time	R_L = 1 kΩ						
		C_L = 50 pF	2.0V	55	140	175	210	ns
		C_L = 150 pF	2.0V	67	180	225	270	ns
		C_L = 50 pF	4.5V	15	28	35	42	ns
		C_L = 150 pF	4.5V	24	36	45	54	ns
		C_L = 50 pF	6.0V	14	24	30	36	ns
		C_L = 150 pF	6.0V	22	31	39	47	ns
t_{PHZ}, t_{PLZ}	Maximum Output Disable Time	R_L = 1 kΩ C_L = 50 pF	2.0V	40	125	156	188	ns
			4.5V	13	25	31	38	ns
			6.0V	12	21	27	32	ns
t_S	Minimum Set Up Time Data to LE		2.0V	30	75	95	110	ns
			4.5V	10	15	19	22	ns
			6.0V	9	13	16	19	ns
t_H	Minimum Hold Time LE to Data		2.0V		25	31	38	ns
			4.5V		5	6	7	ns
			6.0V		4	5	6	ns
t_W	Minimum Pulse Width LE, or Data		2.0V	30	80	100	120	ns
			4.5V	9	16	20	24	ns
			6.0V	8	14	18	20	ns
t_{TLH}, t_{THL}	Maximum Output Rise and Fall Time, Clock	C_L = 50 pF	2.0V	25	60	75	90	ns
			4.5V	7	12	15	18	ns
			6.0V	6	10	13	15	ns
C_{PD}	Power Dissipation Capacitance (Note 5) (per latch)	OC = V_{CC}		5				pF
		OC = GND		52				pF
C_{IN}	Maximum Input Capacitance			5	10	10	10	pF

AC Electrical Characteristics (Continued)

Symbol	Parameter	Conditions	V_{CC}	$T_A = 25°C$	$T_A = -40$ to $85°C$	$T_A = -55$ to $125°C$	Units
				Typ	Guaranteed Limits		
C_{OUT}	Maximum Output Capacitance			15	20	20	20	pF

Note 5: C_{PD} determines the no load dynamic power consumption, $P_D = C_{PD} V_{CC}^2 f + I_{CC} V_{CC}$, and the no load dynamic current consumption, $I_S = C_{PD} V_{CC} f + I_{CC}$.

Physical Dimensions inches (millimeters) unless otherwise noted

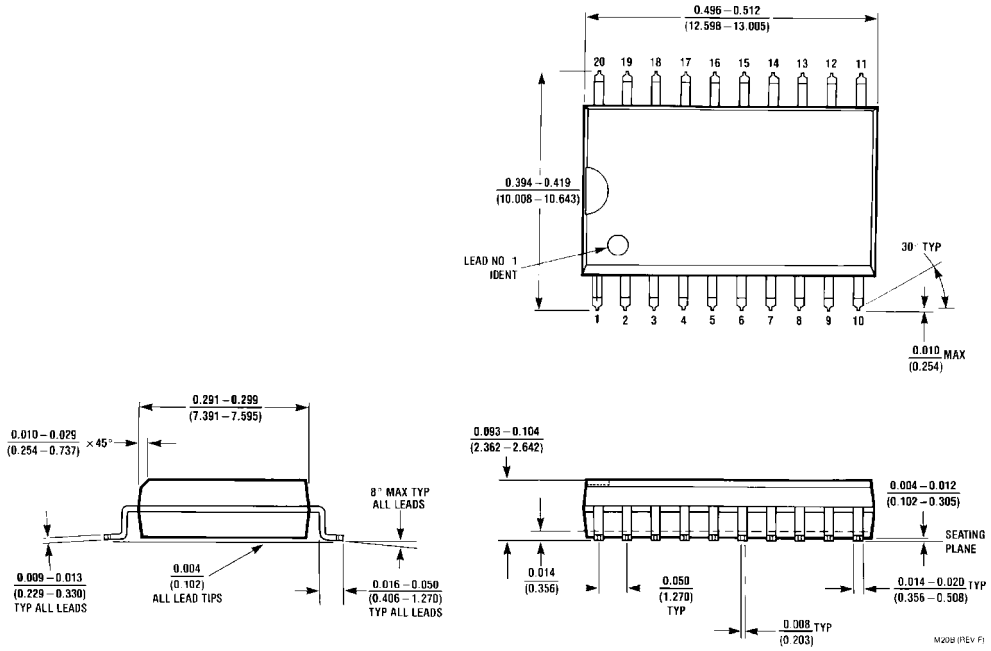

20-Lead Small Outline Integrated Circuit (SOIC), JEDEC MS-013, 0.300" Wide
Package Number M20B

Physical Dimensions inches (millimeters) unless otherwise noted (Continued)

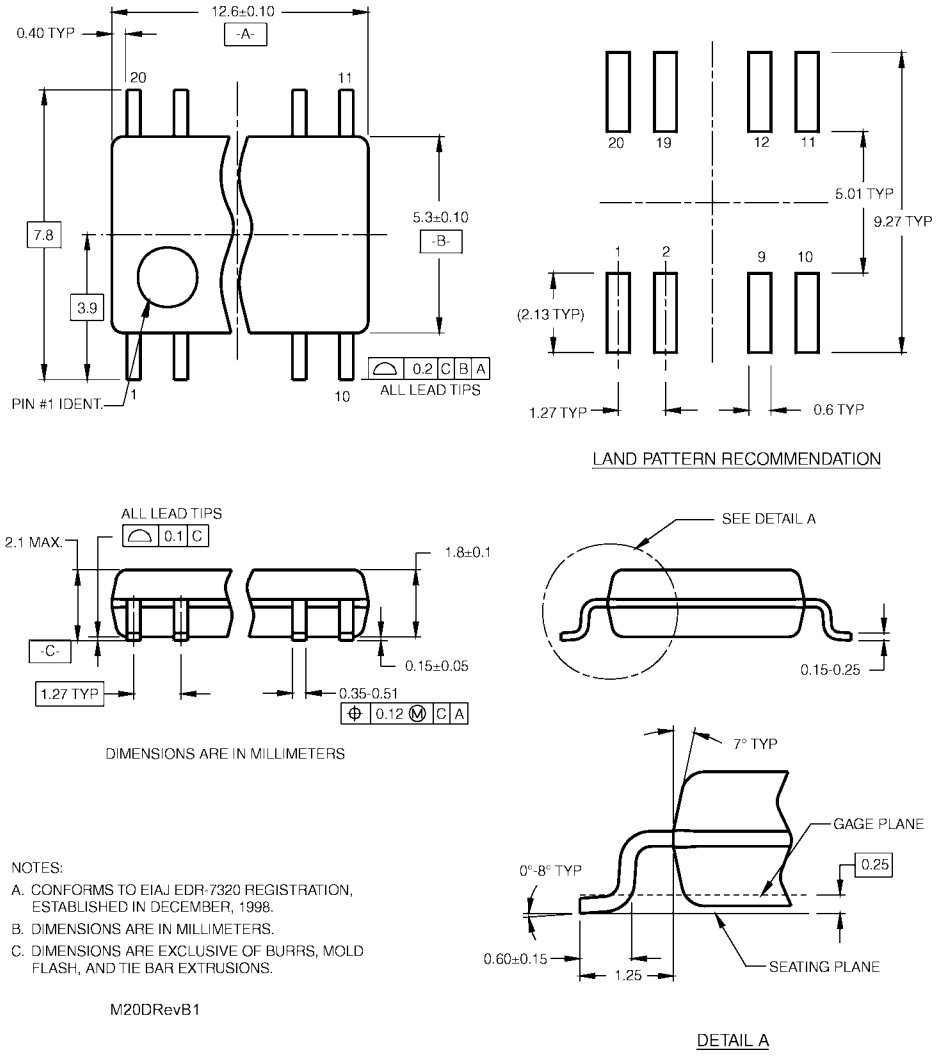

NOTES:

A. CONFORMS TO EIAJ EDR-7320 REGISTRATION, ESTABLISHED IN DECEMBER, 1998.

B. DIMENSIONS ARE IN MILLIMETERS.

C. DIMENSIONS ARE EXCLUSIVE OF BURRS, MOLD FLASH, AND TIE BAR EXTRUSIONS.

M20DRevB1

20-Lead Small Outline Package (SOP), EIAJ TYPE II, 5.3mm Wide
Package Number M20D

Physical Dimensions inches (millimeters) unless otherwise noted (Continued)

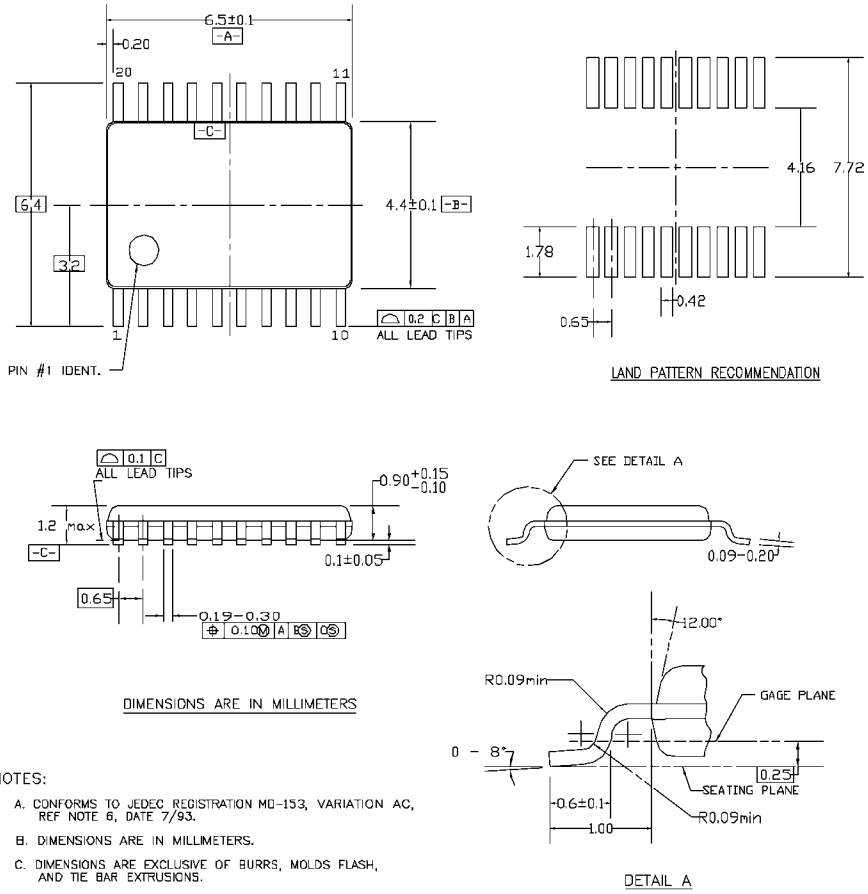

NOTES:

A. CONFORMS TO JEDEC REGISTRATION MO-153, VARIATION AC, REF NOTE 6, DATE 7/93.

B. DIMENSIONS ARE IN MILLIMETERS.

C. DIMENSIONS ARE EXCLUSIVE OF BURRS, MOLDS FLASH, AND TIE BAR EXTRUSIONS.

D. DIMENSIONS AND TOLERANCES PER ANSI Y14.5M, 1982.

MTC20REVD1

20-Lead Thin Shrink Small Outline Package (TSSOP), JEDEC MO-153, 4.4mm Wide
Package Number MTC20

Physical Dimensions inches (millimeters) unless otherwise noted (Continued)

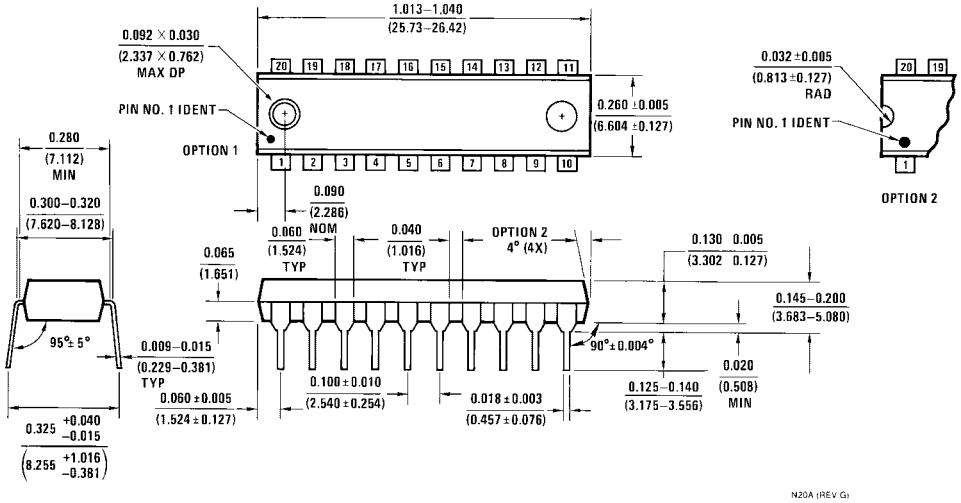

20-Lead Plastic Dual-In-Line Package (PDIP), JEDEC MS-001, 0.300" Wide
Package Number N20A

Fairchild does not assume any responsibility for use of any circuitry described, no circuit patent licenses are implied and Fairchild reserves the right at any time without notice to change said circuitry and specifications.

LIFE SUPPORT POLICY

FAIRCHILD'S PRODUCTS ARE NOT AUTHORIZED FOR USE AS CRITICAL COMPONENTS IN LIFE SUPPORT DEVICES OR SYSTEMS WITHOUT THE EXPRESS WRITTEN APPROVAL OF THE PRESIDENT OF FAIRCHILD SEMICONDUCTOR CORPORATION. As used herein:

1. Life support devices or systems are devices or systems which, (a) are intended for surgical implant into the body, or (b) support or sustain life, and (c) whose failure to perform when properly used in accordance with instructions for use provided in the labeling, can be reasonably expected to result in a significant injury to the user.
2. A critical component in any component of a life support device or system whose failure to perform can be reasonably expected to cause the failure of the life support device or system, or to affect its safety or effectiveness.

www.fairchildsemi.com