MLX90291

SMD Programmable Linear Hall Sensor IC
Featuring PWM Output

Features and Benefits

- Programmable Hall effect sensor
  - 12-bit 125Hz PWM output signal proportional to the magnetic flux density
  - Switch function
- Measurement range from ±15mT to ±400mT
- Low noise output signal (PWM jitter)
- Programmable through the connector (supply, ground & output)
- 16 bit customer ID number (48 bit MLX ID for traceability purposes)
- SOIC8 package RoHS compliant
- Lead free component, suitable for lead free soldering profile 260°C

Application Examples

- Rotary position sensor
- Linear position sensor
- Contactless switch

Ordering Code

Product Code	Temperature Code	Package Code	Option Code	Packing Form Code
MLX90291	K	DC	BCA-000	TU
MLX90291	K	DC	BCA-000	RE

Legend:
Temperature Code: K for Temperature Range -40°C to 125°C
Package Code: DC for SOIC8
Packing Form: TU for Tube, RE for Reel

Ordering Example: MLX90291-KDC-BCA-000-TU

1 Functional Diagram

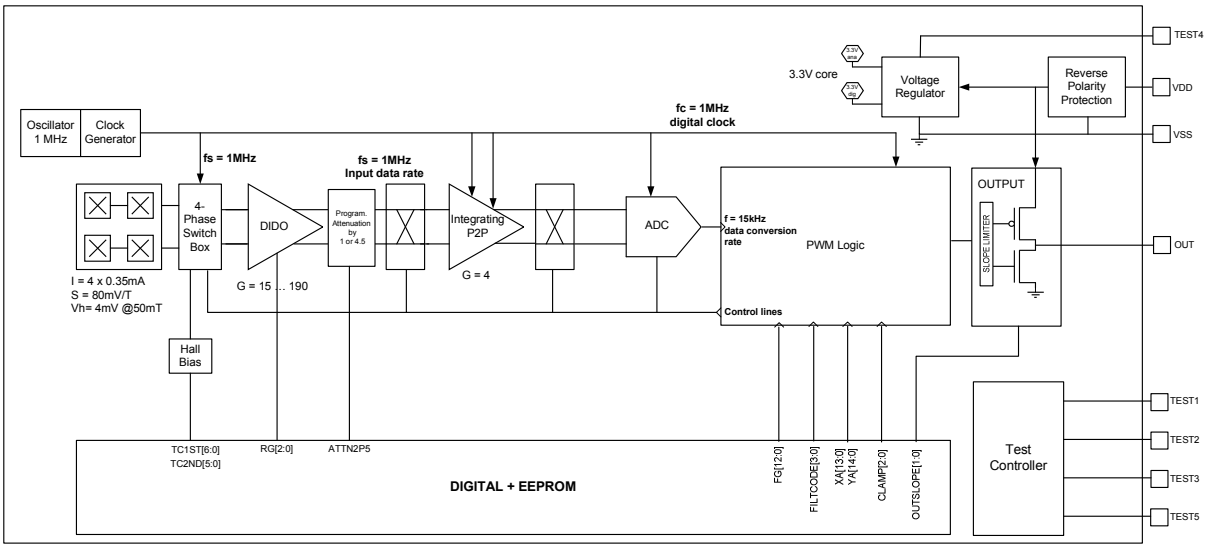

Figure 1: Block diagram

2 General Description

The MLX90291 is a monolithic programmable linear Hall sensor IC, which can provide a PWM output signal proportional to the externally applied magnetic flux density or act as a switch with a programmable threshold level. The transfer characteristic of the MLX90291 is fully programmable (offset, gain, clamping levels, …).

3 Table of Contents

1 Functional Diagram 2
2 General Description 2
3 Table of Contents 3
4 Glossary of Terms 4
5 Absolute Maximum Ratings 4
6 Pin Definitions and Descriptions 4
7 General Electrical Specifications 5
8 Magnetic specification 5
9 Timing specification 6
10 PWM output specification 7
11 Fault modes 7
12 Programmable Items 8
12.1 Parameter table 8
12.2 Output mode configuration (OUTMODE) 8
12.3 Sensitivity programming (ROUGHGAIN, FINEGAIN) 8
12.4 Offset / output quiescent voltage programming (XA, YA) 9
12.5 Clamping level programming (CLAMP) 10
12.6 Bandwidth and filter programming (FILTCODE) 10
12.7 Current limitation (OUTSLOPE) 10
12.8 PWM Mode duty cycle definition (DCDEF) 11
12.9 Sensitivity and temperature drift programming (TC1ST, TC2ND) 12
12.10 Offset temperature drift programming (OFFDRIFT) 12
12.11 Functional mode (SWITCH) 12
12.12 Polarity (PLATEPOL) 12
12.13 Attenuator (ATTN2P5) 13
12.14 Customer ID (CSTID) 13
13 Recommended Application Diagrams 14
13.1 Resistor and Capacitor Values 14
13.2 Pull down resistor for diagnostic low 14
13.3 Pull up resistor for diagnostic high 14
14 Standard information regarding manufacturability of Melexis products with different soldering processes 15
15 ESD Precautions 15
16 Package Information 16
16.1 SOIC8 Package Dimensions 16
16.2 SOIC8 Pin Out and Marking 16
16.3 SOIC8 Hall plate positioning 17
17 Disclaimer 18

4 Glossary of Terms

Tesla	Units for the magnetic flux density, 1 mT = 10 Gauss
TC	Temperature Coefficient in ppm/°C
NC	Not Connected
ADC	Analog-to-Digital Converter
PTC	Programming Through Connector
POR	Power on Reset
INL	Integral Non Linearity
DNL	Differential Non Linearity
PWM	Pulse Width Modulation

5 Absolute Maximum Ratings

Parameter	Symbol	Value	Units
Positive Supply Voltage (over-voltage)	Vdd	+20	V
Reverse Supply Voltage Protection		-10 -14 (200s max, T_A = +25°C)	V
Positive Output Voltage		+10 +14 (200s max, T_A = +25°C)	V
Output Current	Iout	20	mA
Reverse Output Voltage(1)		-5	V
Reverse Output Current(1)		-50	mA
Operating Ambient Temperature Range	T_A	-40 to +150	°C
Storage Temperature Range	T_S	-55 to +150	°C
Magnetic Flux Density		± 10	T

Table 1: Absolute maximum ratings

(1) Realized through an on-chip resistor along the output line

Exceeding the absolute maximum ratings may cause permanent damage. Exposure to absolute maximum rated conditions for extended periods may affect device reliability.

6 Pin Definitions and Descriptions

Pin №	Name	Type	Function
1	VDD	Supply	Supply Voltage
2	VSS	Ground	Ground Voltage
3	TEST4	N/A	MLX Test and factory calibration
4	OUT	Digital	Sensor output signal
5	TEST5	N/A	MLX Test and factory calibration
6	TEST3	N/A	MLX Test and factory calibration
7	TEST2	N/A	MLX Test and factory calibration
8	TEST1	N/A	MLX Test and factory calibration

Table 2: Pin definition and description – S08 package

It is recommended to connect the MLX test pins to the Ground for optimal EMC results. See section 14 for a recommended application diagram

7 General Electrical Specifications

Operating Parameters T_A = -40°C to 125°C, Vdd = 5.0 V, using recommended application diagram, unless otherwise specified.

Parameter	Symbol	Test Conditions	Min	Typ	Max	Units
Nominal Supply Voltage	V_{DD}		4.5	5	5.5	V
Supply Current	I_{DD}			8	10	mA
Peak Supply Current	I_{DDpeak}	During power-up and PWM switching			15	mA
Reset Voltage (POR)	V_{POR}		2.2		2.7	V
POR Threshold Hysteresis	$V_{PORHYST}$			0.3		V
Operating Threshold (rising)	$V_{OPERATING}$			3.3	3.8	V
Under-Voltage Threshold (falling)	V_{UNDER}	Immediate diagnostic low without reset in case of recovery	2.7	3		V
Operating / Under-Voltage Threshold	V_{HYST}			0.1		V
Programming Voltage	V_{PROG}	Not Locked Part Output = High Impedance	6.7	7.4	7.7(1)	V
Overvoltage detection	V_{OVER}	Output = High Impedance	7.5(1)	8.5		V
Load resistance range (Pull-up/down)	R_L	Pull-up OUT to 5V	2	4.7		kΩ
Load Capacitor range	C_L	Between OUT and GND		10		nF
Output Saturation Voltage Push Pull Mode	$V_{SATPPHI}$	I_{OUT} = + 2mA	V_{DD} – 0.3			V
	$V_{SATPPLO}$	I_{OUT} = – 2 mA			0.3	V
Output Saturation Voltage Open Drain Mode	V_{SATOD}	I_{OUT} = – 2 mA Output = Low (Driver ON)			0.3	V
Output Leakage Current Open Drain Mode	I_{LEAKOD}	V_{OUT} = + 5 V Output = High (Driver OFF)		2	10	µA
Output Short Circuit Current	$I_{OUTSCGND}$	Current limitation fully ON	+ 15		+ 28	mA
	$I_{OUTSCVDD}$	Current limitation fully ON	– 28		– 15	mA

Table 3: General electrical parameters

(1) No overlap possible at the same temperature

8 Magnetic specification

Operating Parameters T_A = -40°C to 125°C, Vdd = 5.0 V, unless otherwise specified.

Parameter	Symbol	Test Conditions	Min	Typ	Max	Units
Magnetic Flux Density range	B		±15	±40	±400	mT

Table 4: Magnetic specification

9 Timing specification

Operating Parameters T_A = -40°C to 125°C, Vdd = 5.0 V, unless otherwise specified

Parameter	Symbol	Test Conditions	Min	Typ	Max	Units
Power Up Sequence	t_{ON1}	$0 < V_{DD} < V_{POR}$		$F(V_{DDSR})$		ms
	t_{ON2}	$V_{POR} < V_{DD} < V_{OPERATING}$		$F(V_{DDSR})$		ms
	t_{ON3}	$V_{DD} > V_{OPERATING}$		1		Cycle
Power Supply Slew rate(external)	V_{DDSR}		0.0005		5	V/µs
EEPROM Check	t_{EEPROM}	EEPROM dump + CRC check		0.5	1	ms
Main Oscillator Frequency	F_{OSC}	Tolerance ± 10%	921	1024	1127	kHz
Tick Time	t_{TICK}			0.98		µs
PWM Cycle Duration	$Cycle_{PWM}$	2^{13} t_{TICK}		8		ms
PWM Output Frequency	F_{PWM}	$F_{OSC}/2^{13}$		125		Hz
Sampling Frequency	F_{SAMPLE}	Analog sampling		Fosc		
Conversion Rate @ F_{OSC} = 1024 kHz	F_{CONV}	Measurement: 40 analog samples Conversion (ADC): 25 µs		70		µs
Low pass filtering (First order filter) @ F_{OSC} = 1024 kHz @ -3 db	F_{FILTER}	FILTCODE = 9 FILTCODE = 8 FILTCODE = 7 FILTCODE = 6 FILTCODE = 5 FILTCODE = 4 FILTCODE = 3 FILTCODE = 2		4 9 17 35 70 139 279 557		Hz
Output Slope current generator	I_{SLOPE}	OUTSLOPE = 0 OUTSLOPE = 1 OUTSLOPE = 2 OUTSLOPE = 3		4 6 11 20		mA

Table 5: Timing specification of the analog output

10 PWM output specification

Operating Parameters T_A = -40°C to 125°C, Vdd = 5.0 V, unless otherwise specified

Parameter	Symbol	Test Conditions	Min	Typ	Max	Units
PWM Output Clamping	SCG_{PWM}	CLAMP = 0 CLAMP = 1 CLAMP = 2 CLAMP = 3 CLAMP = 4 CLAMP = 5 CLAMP = 6	1 4 5 6 7 8 9		99 96 95 94 93 92 91	%DC
PWM Output Offset	PWM_{OQ}	Programming Range	0		100	%DC
PWM Output Offset Resolution	PWM_{OQRES}	Programming Resolution		0.025		%DC
PWM Output Slope	S	10%-90% Swing	0.1	1	6.4	%DC/mT
PWM Output Slope Resolution	S_{RES}	% of Slope target value (fine gain)		0.025		%
PWM Resolution	LSB_{PWM}	12 bits		0.0125		%DC
SWITCH Low Level Threshold	$SWITCH_{LO}$	Switch mode Programming range	0		100	%
SWITCH High Level Threshold	$SWITCH_{HI}$	Switch mode Programming range	0		100	%
SWITCH Programming resolution	$SWITCH_{RE}$	Switch mode Resolution		0.025		%
PWM Linearity	DNL_{PWM} INL_{PWM}	13 bits resolution 40 mT – 1%DC/mT	-1 -2		1 2	LSB_{PWM}
PWM Jitter	JIT_{PWM}	S = 1% DC/mT F_{PWM} = 125 Hz Filter setting: m=32	– 2		+ 2	LSB_{PWM}
PWM Clamping Accuracy	$Clamp_{ACC}$		– 2		+ 2	LSB_{PWM}
Intrinsic Offset Thermal Drift	Δ^TOffset	25 °C to - 40 °C 25 °C to 125 °C	– 0.1		+ 0.1	mT
Thermal Sensitivity Drift	$\Delta^T S$	After calibration @ MLX full temperature range	– 150	0	+ 150	ppm/°C
Sensitivity thermal coefficient resolution	RES	Incremental TC Adjust 5 bits over ± 800ppm/°C		50		ppm/°C

Table 6: PWM output specification

11 Fault modes

Operating Parameters T_A = -40°C to 125°C, Vdd = 5.0 V, unless otherwise specified

Parameter	Symbol	Test Conditions	Min	Typ	Max	Units
Output signal in Fault state	$Fault_{OUT}$	EEPROM parity fail	4		-	V
Parity Fail Criterion	n_{PARITY}	Successive CRC fails before	-	2	-	Count
Broken VSS	VBR_{VSS}	Pull-Up resistor = 5K	4			V
Broken VDD	VBR_{VDD}	Pull-Up resistor = 5K	4			V

Table 7: Fault modes

12 Programmable Items

12.1 Parameter table

Parameter	Bits	Comment
OUTMODE	1	Push pull or open drain output drive
ROUGHGAIN	3	Rough gain preamplifier
FINEGAIN	13	Digital fine gain adjustment from -3.999 to +3.999
XA	14	Offset before gain
YA	15	Offset after gain, (Xa,Ya) defines the zero Gauss point
CLAMP	3	Clamp high and clamp low level
FILTCODE	4	Digital output filter
OUTSLOPE	2	Output Slope Control
DCDEF	1	PWM Duty Cycle Definition
TC1ST	7	Sensitivity temperature drift correction 1st order
TC2ND	6	Sensitivity temperature drift correction 2nd order
OFFDRIFT	6	Residual Offset Correction
SWITCH	1	PWM/Switch mode
PLATEPOL	1	Invert Sensitivity Sign
ATTN2P5	1	Attenuator block switch
CSTID	16	Melexis ID

Table 8: Customer programmable items

12.2 Output mode configuration (OUTMODE)

OUTMODE configures the output driver.

OUTMODE	Output Driver
0	PWM Open-drain
1	PWM Push-pull

Table 9: Output configuration

12.3 Sensitivity programming (ROUGHGAIN, FINEGAIN)

ROUGHGAIN[2:0]

This 3-bit register controls the gain of the pre-amplifier.

- The MSB controls the enable of the PREAMP function with a gain of 4.3 (~2mA extra I_{DD})
- The 2 LSB control the gain of the MAINAMP

Value	Typical Gain
0	15.0
1	21.6
2	31.1
3	44.8
4	64.5
5	92.9
6	133.7
7	192.6

Table 10: ROUGHGAIN versus amplifier gain

FINEGAIN[12:0]

Value defines the digital gain adjustment

- The code 1024 corresponds to a gain of 1
- The MSB is the sign bit which acts as a polarity bit
- FINEGAIN gain range is from -3.9999 to +3.99999

12.4 Offset / output quiescent voltage programming (XA, YA)

XA[13:0]

PWM mode: Offset trimming before FINEGAIN block
Switch mode: Threshold for the output to switch

YA[14:0]

PWM mode: Offset trimming after FINEGAIN block
Switch mode: Hysteresis for the output to switch

Both parameters together define the zero Gauss point in PWM mode

In switch mode, XA is used to set the threshold and YA to set the hysteresis

Case YA > 0	Case YA < 0	Output State
ADC < 4.XA – 16.YA	ADC < 4.XA	Set to Zero
ADC > 4.XA	ADC > 4.XA - 16.YA	Set to One
Otherwise	Otherwise	Unchanged

Table 11: Output state as function of XA and YA in switch mode

12.5 Clamping level programming (CLAMP)

CLAMP[2:0] defines the clamping level of the PWM output

CLAMP	Minimal output [%DC]	Maximal output [%DC]
0	1	99
1	4	96
2	5	95
3	6	94
4	7	93
5	8	92
6	9	91
7	10	90

Table 12: CLAMP parameter versus output.

12.6 Bandwidth and filter programming (FILTCODE)

FILTCODE[3:0] allows adjusting the internal bandwidth of the sensor in order to optimize for speed or resolution.

FILTCODE	Cut off frequency [Hz]	Attenuation [dB]	Tau [ms]
2	557	-8.0	0.29
3	279	-11.2	0.57
4	139	-14.4	1.14
5	70	-18.1	2.29
6	35	-22.4	4.57
7	17	-27.1	9.14
8	9	-32.3	18.29
9	4	-38.1	36.57

Table 13: FILTCODE settings PWM mode

12.7 Current limitation (OUTSLOPE)

2 Bit register to set the current limitation for slew rate control

OUTSLOPE	Current limitation [mA]
0	4
1	6
2	11
3	20

Table 14: Current limitation

12.8 PWM Mode duty cycle definition (DCDEF)

The PWM duty cycle definition is as follows.

DCDEF	PWM duty cycle definition
0	tLow / (tLow + tHigh)
1	tHigh / (tLow + tHigh)

Table 15: PWM duty cycle definition

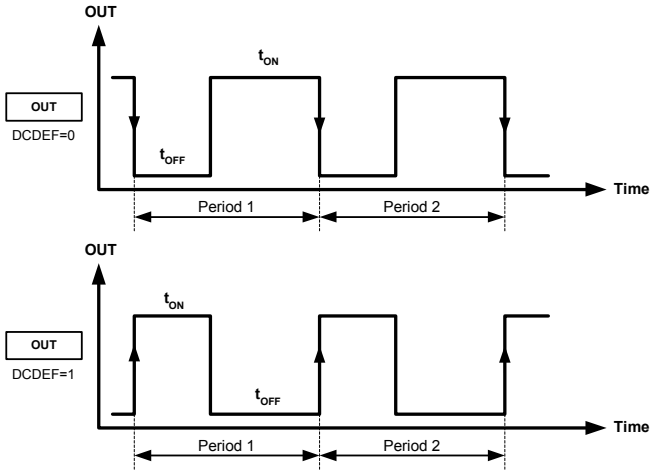

Figure 2: Two different PWM modes

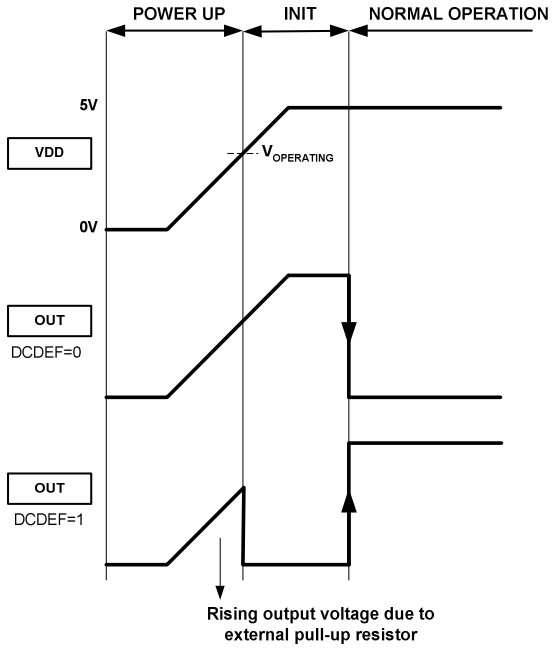

Figure 3: Power-on behaviour of the two different modes

12.9 Sensitivity and temperature drift programming (TC1ST, TC2ND)

TC1ST[6:0]

Programming first order sensitivity temperature drift

Value	Typical 1st order TC
0	+2740ppm/°C
63 or 64	0ppm/°C
127	-2950ppm/°C

Table 16: TC1ST parameter

TC2ND[5:0]

Programming second order sensitivity temperature drift

Value	Typical 2nd order TC
0 or 32	0 ppm/°C²
31	+6.8 ppm/°C²
63	-6.1 ppm/°C²

Table 17: TC2ND parameter

12.10 Offset temperature drift programming (OFFDRIFT)

OFFDRIFT[5:0] parameter defines the offset behaviour over temperature (1st order)

Value	Offset drift correction
0 or 32	0 mV/°C
31	+0.9 mV/°C
63	-0.9 mV/°C

Table 18: OFFDRIFT parameter versus correction

12.11 Functional mode (SWITCH)

Value	Offset drift correction
0	PWM output mode
1	Switch output mode

Table 19: SWITCH parameter

12.12 Polarity (PLATEPOL)

PLATEPOL parameter changes the sign of the measured sensitivity
Default value = 0

12.13 Attenuator (ATTN2P5)

Switch to control the attenuation block in the signal path

Value	ATTN2P5
0	Attenuation factor = 1
1	Attenuation factor = 4.5

Table 20: Attenuation settings

12.14 Customer ID (CSTID)

16-bit customer programmable ID

13 Recommended Application Diagrams

13.1 Resistor and Capacitor Values

Part	Description	Value	Unit
C1	Decoupling, EMI, ESD	10	nF
C2	Supply capacitor, EMI, ESD	100	nF
R1	Pull up or pull down resistor	4.7	kΩ

Table 21: Resistive and capacitive values for the recommended application diagrams

13.2 Pull down resistor for diagnostic low

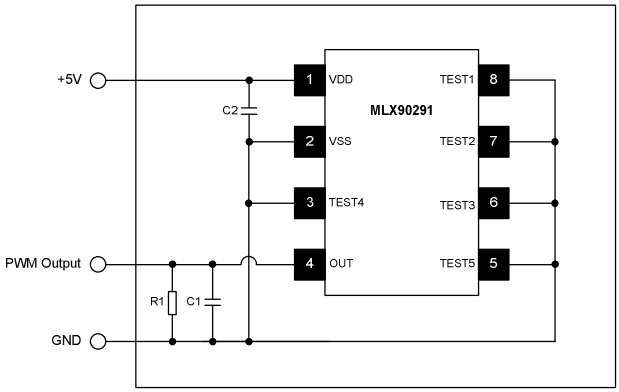

Figure 4: Diagnostic low

13.3 Pull up resistor for diagnostic high

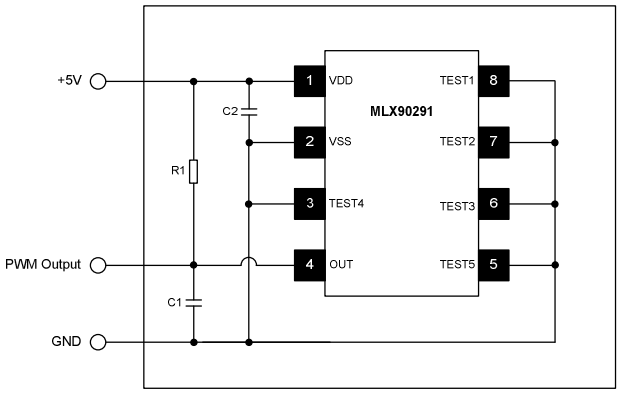

Figure 5: Diagnostic high

14 Standard information regarding manufacturability of Melexis products with different soldering processes

Our products are classified and qualified regarding soldering technology, solderability and moisture sensitivity level according to following test methods:

Reflow Soldering SMD's (Surface Mount Devices)

- IPC/JEDEC J-STD-020
  Moisture/Reflow Sensitivity Classification for Nonhermetic Solid State Surface Mount Devices
  (classification reflow profiles according to table 5-2)
- EIA/JEDEC JESD22-A113
  Preconditioning of Nonhermetic Surface Mount Devices Prior to Reliability Testing
  (reflow profiles according to table 2)

Wave Soldering SMD's (Surface Mount Devices) and THD's (Through Hole Devices)

- EN60749-20
  Resistance of plastic- encapsulated SMD's to combined effect of moisture and soldering heat
- EIA/JEDEC JESD22-B106 and EN60749-15
  Resistance to soldering temperature for through-hole mounted devices

Iron Soldering THD's (Through Hole Devices)

- EN60749-15
  Resistance to soldering temperature for through-hole mounted devices

Solderability SMD's (Surface Mount Devices) and THD's (Through Hole Devices)

- EIA/JEDEC JESD22-B102 and EN60749-21
  Solderability

For all soldering technologies deviating from above mentioned standard conditions (regarding peak temperature, temperature gradient, temperature profile etc) additional classification and qualification tests have to be agreed upon with Melexis.

The application of Wave Soldering for SMD's is allowed only after consulting Melexis regarding assurance of adhesive strength between device and board.

Melexis recommends reviewing on our web site the General Guidelines soldering recommendation (http://www.melexis.com/Quality_soldering.aspx) as well as trim&form recommendations (http://www.melexis.com/Assets/Trim-and-form-recommendations-5565.aspx).

Melexis is contributing to global environmental conservation by promoting **lead free** solutions. For more information on qualifications of **RoHS** compliant products (RoHS = European directive on the Restriction Of the use of certain Hazardous Substances) please visit the quality page on our website:
http://www.melexis.com/quality.aspx

15 ESD Precautions

Electronic semiconductor products are sensitive to Electro Static Discharge (ESD).
Always observe Electro Static Discharge control procedures whenever handling semiconductor products.

16 Package Information

16.1 SOIC8 Package Dimensions

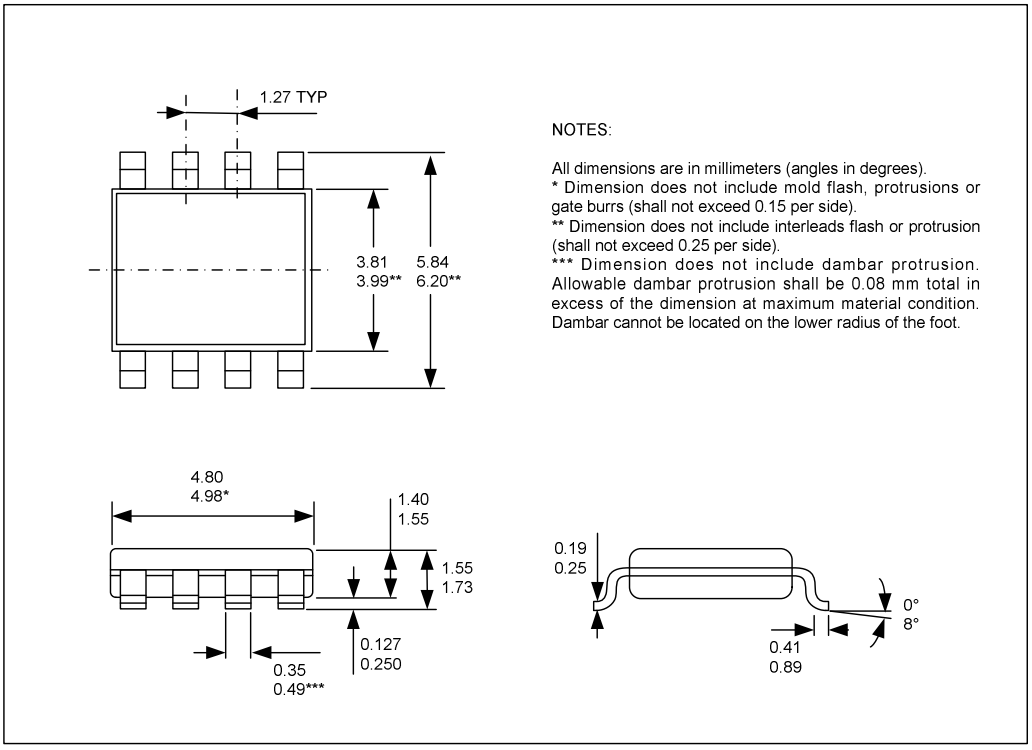

Figure 6: Package dimensions

16.2 SOIC8 Pin Out and Marking

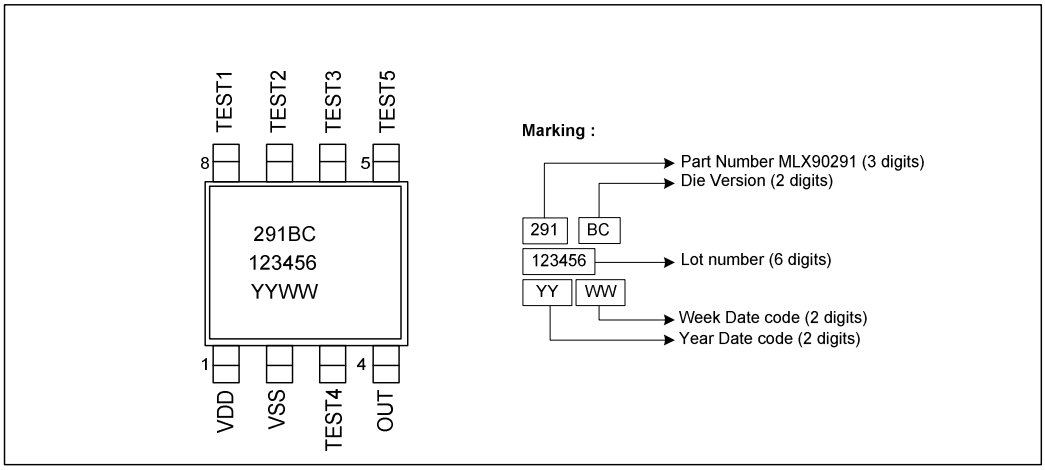

Figure 7: Pin out and marking

16.3 SOIC8 Hall plate positioning

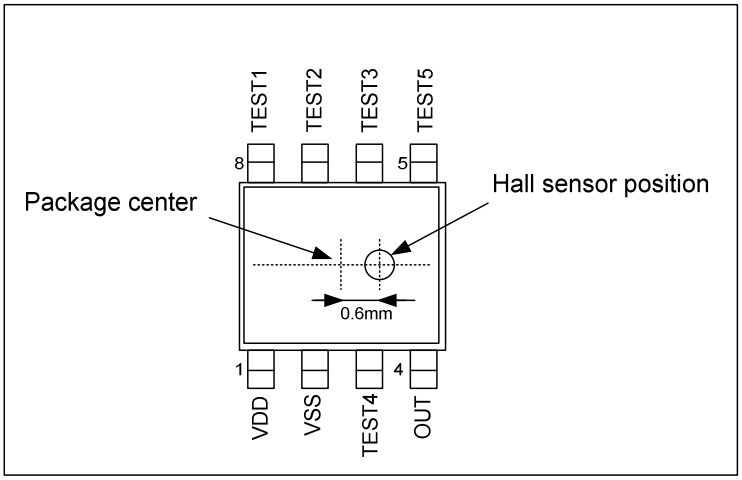

Figure 8: Hall Plate positioning

17 Disclaimer

Devices sold by Melexis are covered by the warranty and patent indemnification provisions appearing in its Term of Sale. Melexis makes no warranty, express, statutory, implied, or by description regarding the information set forth herein or regarding the freedom of the described devices from patent infringement. Melexis reserves the right to change specifications and prices at any time and without notice. Therefore, prior to designing this product into a system, it is necessary to check with Melexis for current information. This product is intended for use in normal commercial applications. Applications requiring extended temperature range, unusual environmental requirements, or high reliability applications, such as military, medical life-support or life-sustaining equipment are specifically not recommended without additional processing by Melexis for each application.
The information furnished by Melexis is believed to be correct and accurate. However, Melexis shall not be liable to recipient or any third party for any damages, including but not limited to personal injury, property damage, loss of profits, loss of use, interrupt of business or indirect, special incidental or consequential damages, of any kind, in connection with or arising out of the furnishing, performance or use of the technical data herein. No obligation or liability to recipient or any third party shall arise or flow out of Melexis' rendering of technical or other services.
© 2012 Melexis NV. All rights reserved.

For the latest version of this document, go to our website at
www.melexis.com

Or for additional information contact Melexis Direct:

Europe, Africa, Asia:
Phone: +32 1367 0495
E-mail: sales_europe@melexis.com

America:
Phone: +1 248 306 5400
E-mail: sales_usa@melexis.com

ISO/TS 16949 and ISO14001 Certified