Virtex-5 FPGA ML561 Memory Interfaces Development Board

User Guide

UG199 (v1.2.1) June 15, 2009

XILINX®

Xilinx is disclosing this user guide, manual, release note, and/or specification (the "Documentation") to you solely for use in the development of designs to operate with Xilinx hardware devices. You may not reproduce, distribute, republish, download, display, post, or transmit the Documentation in any form or by any means including, but not limited to, electronic, mechanical, photocopying, recording, or otherwise, without the prior written consent of Xilinx. Xilinx expressly disclaims any liability arising out of your use of the Documentation. Xilinx reserves the right, at its sole discretion, to change the Documentation without notice at any time. Xilinx assumes no obligation to correct any errors contained in the Documentation, or to advise you of any corrections or updates. Xilinx expressly disclaims any liability in connection with technical support or assistance that may be provided to you in connection with the Information.

THE DOCUMENTATION IS DISCLOSED TO YOU “AS-IS” WITH NO WARRANTY OF ANY KIND. XILINX MAKES NO OTHER WARRANTIES, WHETHER EXPRESS, IMPLIED, OR STATUTORY, REGARDING THE DOCUMENTATION, INCLUDING ANY WARRANTIES OF MERCHANTABILITY, FITNESS FOR A PARTICULAR PURPOSE, OR NONINFRINGEMENT OF THIRD-PARTY RIGHTS. IN NO EVENT WILL XILINX BE LIABLE FOR ANY CONSEQUENTIAL, INDIRECT, EXEMPLARY, SPECIAL, OR INCIDENTAL DAMAGES, INCLUDING ANY LOSS OF DATA OR LOST PROFITS, ARISING FROM YOUR USE OF THE DOCUMENTATION.

© 2007–2009 Xilinx, Inc. All rights reserved.

XILINX, the Xilinx logo, Virtex, Spartan, ISE, and other designated brands included herein are trademarks of Xilinx in the United States and other countries. PCI EXPRESS is a registered trademark of PCI-SIG. All other trademarks are the property of their respective owners.

Revision History

The following table shows the revision history for this document.

Date	Version	Revision
02/12/07	1.0	Initial Xilinx release.
08/09/07	1.1	Revised Read and Write Strobe in Table 5-4, page 49. Added Chapter 7, “ML561 Hardware-Simulation Correlation.”
04/19/08	1.2	Revised Figure 3-11, page 37 and Table 3-19, page 38. Corrected FPGA driver for Read Data and Read Strobe in Table 5-4, page 49. Updated Data and Strobe entries in Table 5-5, page 49. Updated manufacturers and links in Appendix B, “Bill of Materials.”
06/15/09	1.2.1	Clarified VIH(max) voltage in “Terminology.”

Table of Contents

Preface: About This Guide

Guide Contents 7
Additional Documentation 7
Additional Support Resources 8
Conventions 9
Typographical 9
Online Document 9
Terminology 9

Chapter 1: Introduction

About the Virtex-5 FPGA ML561 Memory Interfaces Tool Kit 11
Virtex-5 FPGA ML561 Memory Interfaces Development Board 12

Chapter 2: Getting Started

Documentation and Reference Design CD 15
Initial Board Check Before Applying Power 15
Applying Power to the Board 16

Chapter 3: Hardware Description

Hardware Overview 17
FPGA 18
Memories 19
DDR400 SDRAM Components 19
DDR2 DIMM 19
DDR2 SDRAM Components 20
QDRII SRAM 20
RLDRAM II Devices 20
Memory Details 21
DDR400 and DDR2 Component Memories 21
DDR2 SDRAM DIMM 23
QDRII and RLDRAM II Memories 25
External Interfaces 27
RS-232 27
USB 27
Clocks 27
200 MHz LVPECL Clock 28
SMA Clock 28
33 MHz Clock 28
33 MHz System ACE Controller Oscillator 29
GTP Clocks 29
User I/Os 29
General-Purpose Headers 29
DIP Switch 29

Seven-Segment Displays . . . 30
Light Emitting Diodes (LEDs) . . . 30
Pushbuttons . . . 30
Power On or Off Slide Switch . . . 31
Soft Touch Probe Points . . . 31
Power Measurement Header . . . 31
Liquid Crystal Display Connector . . . 32
Power Regulation . . . 33
Power Distribution . . . 33
Voltage Regulators . . . 34
Board Design Considerations . . . 36

Chapter 4: Electrical Requirements

Power Consumption . . . 39
FPGA Internal Power Budget . . . 46

Chapter 5: Signal Integrity Recommendations

Termination and Transmission Line Summaries . . . 47

Chapter 6: Configuration

Configuration Modes . . . 51
JTAG Chain . . . 52
JTAG Port . . . 52
Parallel IV Cable Port . . . 52
System ACE Interface . . . 52

Chapter 7: ML561 Hardware-Simulation Correlation

Introduction . . . 55
Test Setup . . . 56
Signal Integrity Correlation Results . . . 58
DDR2 Component Write Operation . . . 59
DDR2 Component Read Operation . . . 65
DDR2 DIMM Write Operation . . . 70
DDR2 DIMM Read Operation . . . 76
QDRII Write Operation . . . 81
QDRII Read Operation . . . 86
Summary and Recommendations . . . 91
How to Generate a User-Specific FPGA IBIS Model . . . 93

Appendix A: FPGA Pinouts

FPGA #1 Pinout . . . 95
FPGA #2 Pinout . . . 100
FPGA #3 Pinout . . . 108

Appendix B: Bill of Materials

Appendix C: LCD Interface

General 119
Display Hardware Design 119
Hardware Schematic Diagram 120
Peripheral Device KS0713 121
Controller – Operation 123
Controller – LCD Panel Connections 125
Controller – Power Supply Circuits 126
Operation Example of the 64128EFCBC-3LP 127
Instruction Set 130
Read/Write Characteristics (6800 Mode) 133
Design Examples 134
LCD Panel Used in Full Graphics Mode 134
LCD Panel Used in Character Mode 135
Array Connector Numbering 139

About This Guide

This user guide describes the Virtex®-5 FPGA ML561 Memory Interfaces Development Board. Complete and up-to-date documentation of the Virtex-5 family of FPGAs is available on the Xilinx website at http://www.xilinx.com/virtex5.

Guide Contents

This manual contains the following chapters:

- Chapter 1, "Introduction"
- Chapter 2, "Getting Started"
- Chapter 3, "Hardware Description"
- Chapter 4, "Electrical Requirements"
- Chapter 5, "Signal Integrity Recommendations"
- Chapter 6, "Configuration"
- Chapter 7, "ML561 Hardware-Simulation Correlation"
- Appendix A, "FPGA Pinouts"
- Appendix B, "Bill of Materials"
- Appendix C, "LCD Interface"

Additional Documentation

The following documents are also available for download at http://www.xilinx.com/virtex5.

- Virtex-5 Family Overview

  The features and product selection of the Virtex-5 family are outlined in this overview.

- Virtex-5 FPGA Data Sheet: DC and Switching Characteristics

  This data sheet contains the DC and Switching Characteristic specifications for the Virtex-5 family.

- Virtex-5 FPGA User Guide

  Chapters in this guide cover the following topics:

  - Clocking Resources
  - Clock Management Technology (CMT)
  - Phase-Locked Loops (PLLs)
  - Block RAM

  - Configurable Logic Blocks (CLBs)
  - SelectIO™ Resources
  - SelectIO Logic Resources
  - Advanced SelectIO Logic Resources
- Virtex-5 FPGA RocketIO GTP Transceiver User Guide

  This guide describes the RocketIO™ GTP transceivers available in the Virtex-5 LXT and SXT platforms.
- Virtex-5 FPGA RocketIO GTX Transceiver User Guide

  This guide describes the RocketIO GTX transceivers available in the Virtex-5 FXT platform.
- Virtex-5 FPGA Embedded Processor Block for PowerPC® 440 Designs

  This reference guide is a description of the embedded processor block available in the Virtex-5 FXT platform.
- Virtex-5 FPGA Embedded Tri-Mode Ethernet MAC User Guide

  This guide describes the dedicated Tri-Mode Ethernet Media Access Controller available in the Virtex-5 LXT, SXT, and FXT platforms.
- Virtex-5 FPGA Integrated Endpoint Block User Guide for PCI Express Designs

  This guide describes the integrated Endpoint blocks in the Virtex-5 LXT, SXT, and FXT platforms used for PCI Express® designs.
- Virtex-5 FPGA XtremeDSP Design Considerations User Guide

  This guide describes the XtremeDSP™ slice and includes reference designs for using the DSP48E.
- Virtex-5 FPGA Configuration Guide

  This all-encompassing configuration guide includes chapters on configuration interfaces (serial and SelectMAP), bitstream encryption, Boundary-Scan and JTAG configuration, reconfiguration techniques, and readback through the SelectMAP and JTAG interfaces.
- Virtex-5 FPGA System Monitor User Guide

  The System Monitor functionality available in all the Virtex-5 devices is outlined in this guide.
- Virtex-5 FPGA Packaging and Pinout Specifications

  This specification includes the tables for device/package combinations and maximum I/Os, pin definitions, pinout tables, pinout diagrams, mechanical drawings, and thermal specifications.
- Virtex-5 FPGA PCB Designer's Guide

  This guide provides information on PCB design for Virtex-5 devices, with a focus on strategies for making design decisions at the PCB and interface level.

Additional Support Resources

To search the database of silicon and software questions and answers, or to create a technical support case in WebCase, see the Xilinx website at: http://www.xilinx.com/support.

Conventions

This document uses the following conventions. An example illustrates each convention.

Typographical

This document uses the following typographical conventions. An example illustrates each convention.

Convention	Meaning or Use	Example
Italic font	References to other documents	See the *Virtex-5 Configuration Guide* for more information.
	Emphasis in text	The address (F) is asserted *after* clock event 2.
Underlined Text	Indicates a link to a web page.	http://www.xilinx.com/virtex5

Online Document

The following conventions are used in this document:

Convention	Meaning or Use	Example
Blue text	Cross-reference link to a location in the current document	See the section "Additional Documentation" for details. Refer to "Clock Management Technology (CMT)" in Chapter 2 for details.
Red text	Cross-reference link to a location in another document	See Figure 5 in the *Virtex-5 FPGA Data Sheet*
Blue, underlined text	Hyperlink to a website (URL)	Go to http://www.xilinx.com for the latest documentation.

Terminology

This section defines terms used in Chapter 7, "ML561 Hardware-Simulation Correlation," of this document.

Data Valid Window (DVW)

DVW is the data valid window opening measured by the VIH and VIL masks. The smaller of the two values are listed as absolute time as well as in terms of the percentage of UI (Unit Interval), or bit time.

Extrapolation

The ultimate goal of a design is to ascertain quality of signal at the receiver I/O Buffer (IOB). This measurement can only be simulated. When the hardware measurements are correlated with the simulation at the probe point, the extra probe capacitance is removed from the IBIS schematics, and the simulation is repeated at two extreme corners (slow-weak and fast-strong). Removal of probe capacitance is important to represent the actual hardware. If the SI characteristics of these simulations are proved to be within the acceptable range with sufficient margin, then the performance requirements for data signal interface of the corresponding memory operation at the target clock frequency are proved to have been met.

Hardware Measurements

These measurements are the actual real-time measurements of an eye diagram and a segment of the test pattern (PRBS6) waveform captured on ML561 hardware at the designated probe point using an Agilent scope.

Inter-Symbol Interference (ISI)

As the frequency of operation increases, the signal delay is affected by the data pattern that precedes the current data bit. This is called the inter-symbol interference (ISI) effect. All testing is performed with a pseudo-random bitstream (PRBS) of order 6, that is, PRBS6. ISI is the jitter represented by the eye at all four voltage thresholds. The worst of the following two sum values are listed in this table:

- Sum of ISI at VIH(ac)-min and VIH(dc)-min
- Sum of ISI at VIL(ac)-max and VIL(dc)-max

Noise Margin

This is the noise margin available at the receiver. Measurements are taken at the AC voltage levels as the minimum vertical opening of the eye in the vicinity of the center of the bit period. Ideally, the input voltage needs to remain above the DC voltage specifications. However, by considering the AC voltage specifications for the nominal voltage level for VREF, these measurements are more conservative values that also include the effects of VREF variations.

- VIH margin: Difference between the top of the eye opening and VIH(ac)-min
- VIL margin: Difference between VIL(ac)-max and the bottom of the eye opening

These measurements are performed in stand-alone fashion for the signal under test. Thus no consideration of crosstalk or Simultaneously Switching Output (SSO) effects are accounted for.

Overshoot / Undershoot Margin

Overshoot margin is the difference between the maximum allowable VIH per JEDEC specification and the maximum amplitude of the measured eye. Similarly, undershoot margin is the difference between the minimum amplitude of the measured eye and the minimum allowable VIL value per JEDEC specification. For both SSTL18 and 1.8V HSTL specifications:

- VIH(max) < (VDDQ + 300 mV) = (1.8 + 0.3)V = 2.1V
- VIL(min) > -300 mV = 0.3V

Note: VIH(max) must not exceed 1.9V for all Micron Parts.

Simulation Correlation

The BoardSim utility of the HyperLynx simulator is used to extract the IBIS schematics of the same signal net for which hardware measurements are made. To replicate the hardware measurement probe set up at the probe point, a 0.5 pF probe capacitance is added based on Agilent probe loading specifications to the extracted IBIS schematics of the memory signal. For the FPGA devices soldered on the ML561 board under test, the process corner (slow, typical, or fast) is not known. Thus simulation is performed for all three corners (slow-weak, typical, and fast-strong), and the results of the case that best fits with hardware measurement is selected for tabulation.

VIH(ac)-min

This term is the minimum input level at which the receiver must recognize input logic High.

VIH(dc)-min

When the input signal reaches VIH(ac)-min, the receiver continues to interpret the input as a logic High as long as the signal remains above this voltage. (This parameter is basically the hysteresis for a logic ‘1’.)

VIL(ac)-max

This term is the maximum input level at which the receiver must recognize input logic Low.

VIL(dc)-max

When the input signal reaches VIL(ac)-max, the receiver continues to interpret the input as a logic Low as long as the signal remains below this voltage. (This parameter is basically the hysteresis for logic ‘0’.)

Chapter 1

Introduction

This chapter introduces the Virtex®-5 FPGA ML561 reference design. It contains the following sections:

- "About the Virtex-5 FPGA ML561 Memory Interfaces Tool Kit"
- "Virtex-5 FPGA ML561 Memory Interfaces Development Board"

About the Virtex-5 FPGA ML561 Memory Interfaces Tool Kit

The Virtex-5 FPGA ML561 Memory Interfaces Tool Kit provides a complete development platform to interface with external memory devices for designing and verifying applications based on the Virtex-5 LXT FPGA platform. This kit allows designers to implement high-speed applications with extreme flexibility using IP cores and customized modules. The Virtex-5 LXT FPGA, with its column-based architecture, makes it possible to develop highly flexible memory interface applications.

The Virtex-5 FPGA ML561 Memory Interfaces Tool Kit includes the following:

- Virtex-5 FPGA ML561 Memory Interfaces Development Board (XC5VLX50T-FFG1136 FPGA)
- 5V/6.5 A DC power supply
- Country-specific power supply line cord
- RS-232 serial cable, DB9-F to DB9-F
- Documentation and reference design CD-ROM

Optional items that also support development efforts include:

- Xilinx® ISE® software
- JTAG cable
- Xilinx Parallel IV cable

For assistance with any of these items, contact your local Xilinx distributor or visit the Xilinx online store at www.xilinx.com.

The heart of the Virtex-5 FPGA ML561 Memory Interfaces Tool Kit is the Virtex-5 FPGA ML561 Development Board. This manual provides comprehensive information on Rev A3 and later revisions of this board.

Virtex-5 FPGA ML561 Memory Interfaces Development Board

A high-level functional block diagram of the Virtex-5 FPGA ML561 Memory Interfaces Development Board is shown in Figure 1-1.

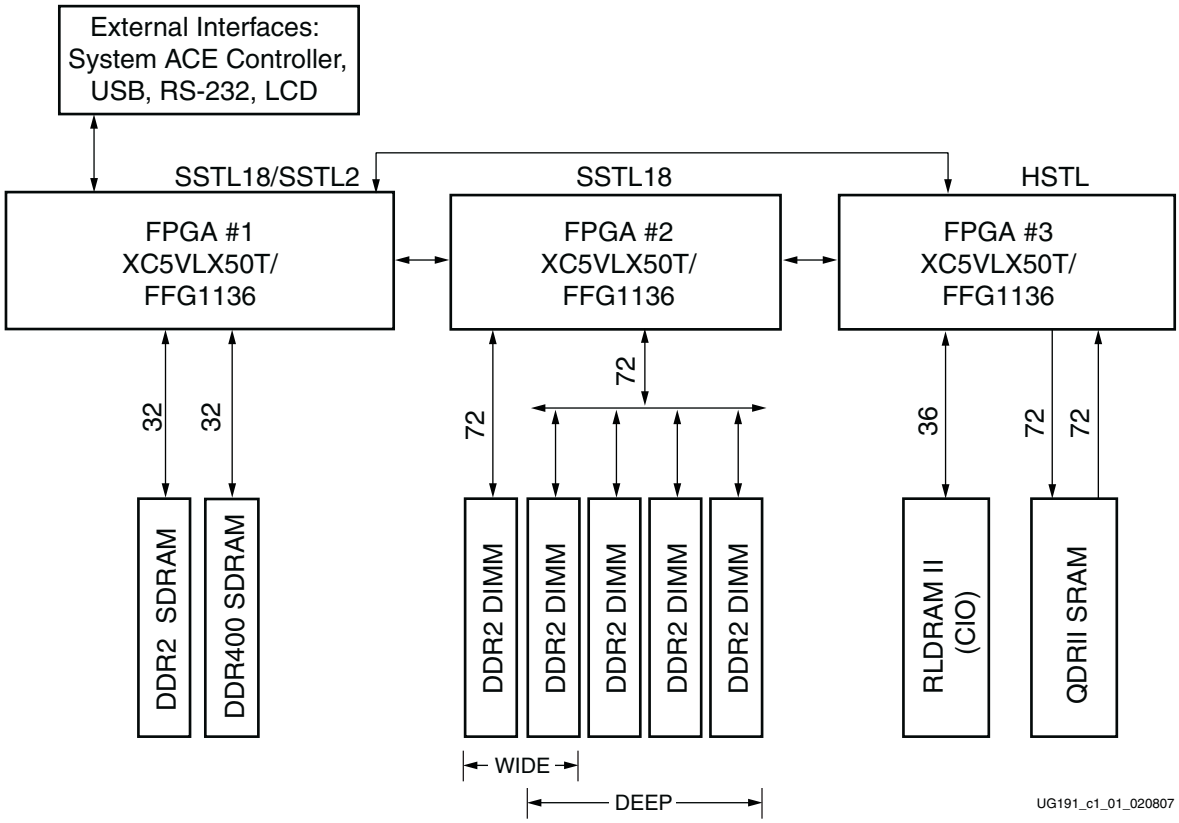

Figure 1-1: **Virtex-5 FPGA ML561 Development Board Block Diagram**

The Virtex-5 FPGA ML561 Development Board includes the following major functional blocks:

- Three XC5VLX50T-FFG1136 FPGAs (see DS100, *Virtex-5 Family Overview*)
- DDR400 components: 128 MB (32M x 32 bits) at 200 MHz clock speed. See XAPP851, *DDR SDRAM Controller Using Virtex-5 FPGA Devices*.
- DDR2 DIMM: Five PC2-5300 DIMM sockets for up to 2 GB (128M x 144 bits). See XAPP858, *High-Performance DDR2 SDRAM Interface in Virtex-5 Devices*.
- DDR2-667 components: 64 MB (16M x 32 bits) at 333 MHz clock speed
- QDRII memory: 16 MB (2M x 72 bits) at up to 300 MHz clock speed. See XAPP853, *QDR II SRAM Interface for Virtex-5 Devices*.
- RLDRAM II memory: 64 MB (16M x 36 bits) at up to 300 MHz clock speed. See XAPP852, *RLDRAM II Memory Interface for Virtex-5 FPGAs*.
- One DB9-M RS-232 port and one USB 2.0 port
- A System ACE™ CompactFlash (CF) Configuration Controller that allows storing and downloading of up to eight FPGA configuration image files
- On-board power regulators with ±5% output margin test capabilities

Figure 1-2 shows the Virtex-5 FPGA ML561 Development Board and indicates the locations of the resident memory devices.

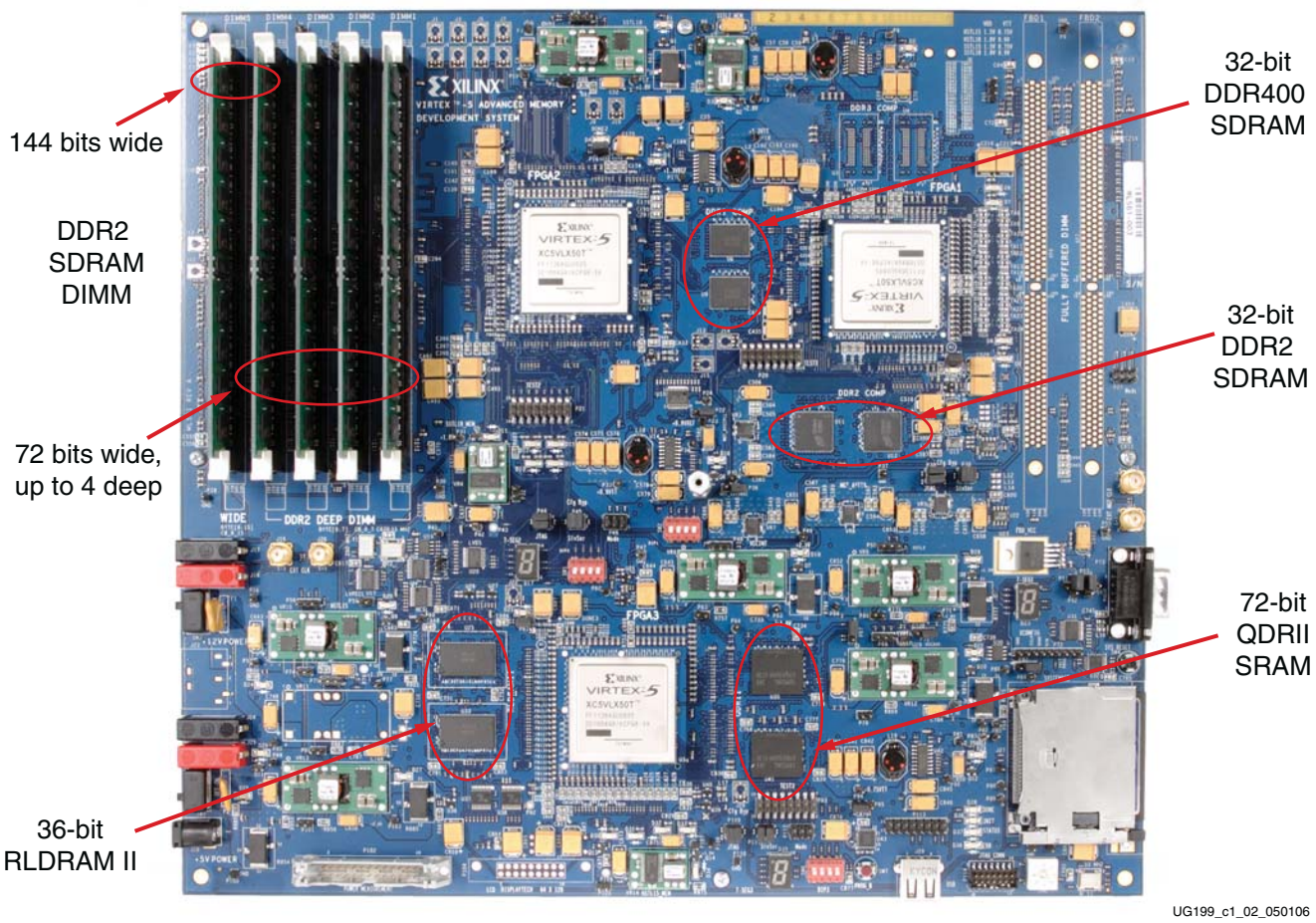

Figure 1-2: **Virtex-5 FPGA ML561 Development Board**

Chapter 2

Getting Started

This chapter describes the items needed to configure the Virtex-5 FPGA ML561 Memory Interfaces Development Board. The Virtex-5 FPGA ML561 Development Board is tested at the factory after assembly and should be received in working condition. It is set up to load a bitstream from the CompactFlash card at socket J27 through the System ACE controller (U45).

This chapter contains the following sections:

- "Documentation and Reference Design CD"
- "Initial Board Check Before Applying Power"
- "Applying Power to the Board"

Documentation and Reference Design CD

The CD included in the Virtex-5 FPGA ML561 Memory Interfaces Tool Kit contains the design files for the Virtex-5 FPGA ML561 Development Board, including schematics, board layout, and reference design files. Open the `ReadMe.rtf` file on the CD to review the list of contents.

Initial Board Check Before Applying Power

Perform these steps before applying board power:

1. Set up the Configuration Mode jumpers (P27, P46, and P112) for JTAG configuration.

   See "Configuration Modes" on page 51 for all available modes for the Virtex-5 FPGA ML561 Development Board.

2. Confirm that the JTAG chain jumpers P38, P44, and P109 are connecting pins 1 to 2 and pins 3 to 4. This way, all three devices are in the chain. Otherwise, the ISE iMPACT software will not find all three devices to configure. For more information see "JTAG Chain" on page 52.
3. Make sure that no inhibit jumpers are present on any of the power supply regulator modules. For more information, see "Voltage Regulators" on page 34.
4. The Virtex-5 FPGA ML561 Development Board has a 200 MHz on-board oscillator, which provides a copy of a differential LVPECL clock to each of the three FPGAs through a differential clock buffer (ICS853006). There is also a connection to a pair of SMA connectors (J19, J20) to provide a differential LVDS clock from an off-board signal generator. Another differential clock buffer (ICS853006) provides a copy of this clock to each of the three FPGAs. These clocks are available after configuration for the design to use for various system clocks.

5. Insert the CompactFlash card included in the kit into socket J27 on the Virtex-5 FPGA ML561 Development Board. To select the startup file, check that SW8 is set to position 0.

Applying Power to the Board

The Virtex-5 FPGA ML561 Development Board is now ready to power on. The Virtex-5 FPGA ML561 Development Board is shipped with a country-specific AC line cord for the universal input 5V desktop power supply. Follow these steps to power up the Virtex-5 FPGA ML561 Development Board:

1. Confirm that the ON-OFF switch, SW5, is in the OFF position.
2. Plug the 5V desktop power supply into the 5V DC input barrel jack J28 on the Virtex-5 FPGA ML561 Development Board. Plug the desktop power supply AC line cord into an electrical outlet supplying the appropriate voltage.
3. Turn SW5 to the ON position. The power indicators for all regulator modules should come on, indicating output from the regulators. The System ACE status LED D37 comes on when the System ACE controller (U45) extracts the BIT configuration file from the CompactFlash card to the FPGA. If no CompactFlash card is installed in the card socket J27 on the Virtex-5 FPGA ML561 Development Board, the red System ACE error LED D38 flashes.
4. If a CompactFlash card is not installed in socket J27, a JTAG cable must be used to configure the FPGAs. To use a Parallel IV cable or other JTAG pod, download the FPGA configuration bitstream into each FPGA. After the DONE LED (D28) comes on, the FPGAs are configured and ready to use.
5. Push the reset button SW4.

XILINX®

Chapter 3

Hardware Description

This chapter describes the major hardware blocks on the Virtex-5 FPGA ML561 Development Board and provides useful design consideration. It contains the following sections:

- "Hardware Overview"
- "Memory Details"
- "External Interfaces"
- "Power Regulation"
- "Board Design Considerations"

Hardware Overview

The ML561 Development/Evaluation system reference design is implemented with three XC5VLX50T-FFG1136 devices from the Virtex-5 FPGA family to demonstrate high-speed external memory application interfaces. The memory technologies supported by the Virtex-5 FPGA ML561 Development Board are DDR2 SDRAM, DDR400 SDRAM, QDRII SRAM, and RLDRAM II SDRAM.

Figure 3-1 provides a view of all the major components on ML561 board. It shows the placement of the three Virtex-5 FPGAs, and the position of the associated major interfaces for each FPGA.

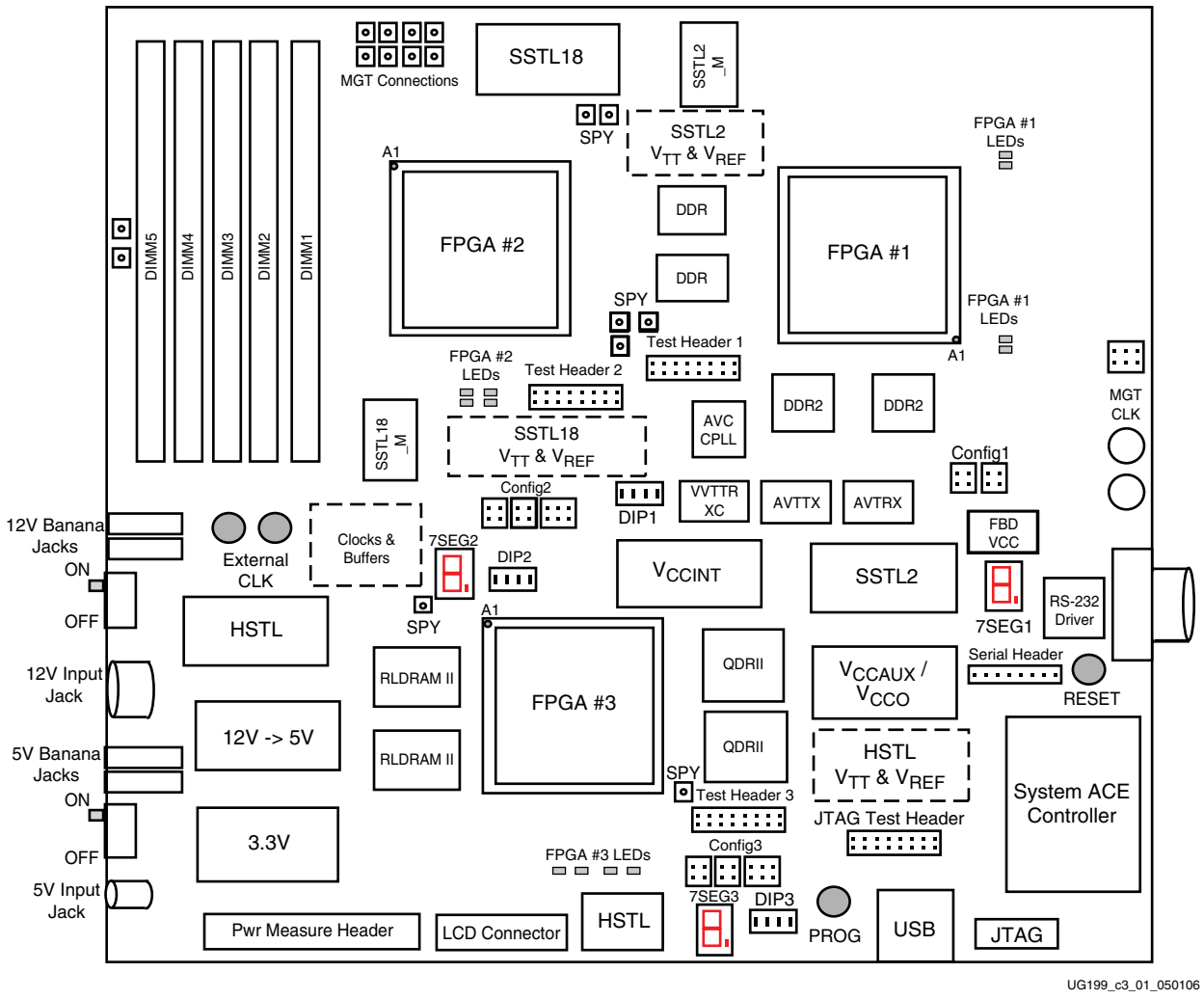

Figure 3-1: **ML561 XC5VLX50T-FFG1136 Board Placement Diagram**

FPGA

The ML561 uses three Virtex-5 XC5VLX50T-FFG1136 devices, each in a 1136-pin, 35 mm x 35 mm BGA package. Figure 1-1, page 12 shows the memory devices associated with the three FPGAs. Refer to Appendix A, "FPGA Pinouts," for a complete pinout of all Virtex-5 devices on the board. Refer to Appendix B, "Bill of Materials," for a list of major components on the Virtex-5 FPGA ML561 Development Board, including their reference designators and links to their corresponding data sheets.

Memories

Table 3-1 lists the types of memories that the ML561 board supports.

Table 3-1: **Summary of ML561 Memory Interfaces**

Memory Type	Maximum Speed	Data Rate	Data Width	I/O Standard	Data/Strobe Ratios
DDR400 SDRAM	200 MHz	400 Mbps	32	SSTL2	8:1
DDR2 DIMM	333 MHz	667 Mbps	144	SSTL18	8:1
DDR2 SDRAM	333 MHz	667 Mbps	32	SSTL18	8:1
QDRII SRAM	300 MHz	1.2 Gbps	72	HSTL18	18:1, 36:1
RLDRAM II	300 MHz	600 Mbps	36	HSTL18	9:1, 18:1

When a larger data/strobe ratio is implemented, for example, a x36 QDRII device, the smaller configurations can also be demonstrated by programming the FPGA for a smaller data width, such as a 9:1 data/strobe ratio for the QDRII device.

DDR400 SDRAM Components

The Virtex-5 FPGA ML561 Development Board has two 200 MHz Micron MT46V32M16BN-5B (16-bit) DDR400 SDRAM components that provide a 32-bit interface. Each 16-bit device is packaged in a 60-ball FBGA package, with a common address and control bus and separate clocks and DQS/DQ signals.

DDR2 DIMM

The Virtex-5 FPGA ML561 Development Board contains five PC-5300 240-pin DIMM sockets for a maximum data width of 144 bits or a maximum depth of four DIMMs. The sockets are arranged in a row leading away from the FPGA so they can share common address and control signals. DIMM1 through DIMM4 share DQ/DQS signals to form a deep 72-bit memory interface, while DIMM5 has separate DQ/DQS signals.

For the deep DDR2 interface, the sockets are to be populated starting at socket DIMM4. Table 3-2 illustrates how the sockets should be populated based on the interface wanted.

Table 3-2: **Populating DDR2 DIMM Sockets**

DIMM Interface	DIMM Sockets Populated	Interface Width
One Deep	5 or 4	72-bit
Two Deep	4 and 3	72-bit
Three Deep	4, 3, and 2	72-bit
Four Deep	4, 3, 2, and 1	72-bit
Two Wide	5 and 4	144-bit

Populating the DIMMs in this order is necessary due to the placement of the termination on the signals being shared. More detail on termination is given in "Board Design Considerations," page 36.

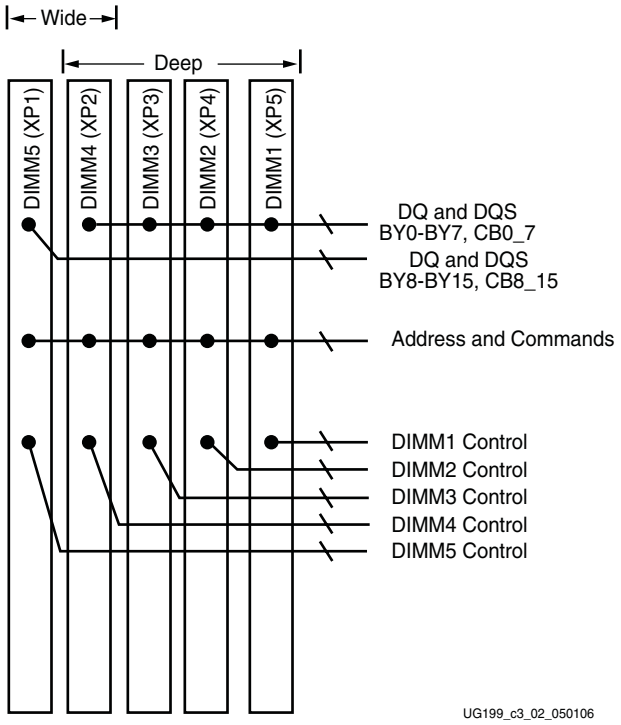

Figure 3-2: **DDR2 Deep and Wide DIMM Sockets**

DDR2 SDRAM Components

The ML561 board contains two 333 MHz Micron MT47H32M16CC-3 (16-bit) DDR2 SDRAM components that provide a 32-bit interface to FPGA #1. Each 16-bit device is packaged in an 84-ball FBGA package, with a common address and control bus and separate clocks and DQS/DQ signals.

QDRII SRAM

The ML561 board contains a 300 MHz QDRII SRAM interface with a 72-bit Read interface and a 72-bit Write interface using two Samsung K7R643684M-FC30 components (x36). They are packaged in a 165-ball FBGA package with a body size of 15 x 17 mm. These two components share the same address/control signals but have separate clock and data signals.

RLDRAM II Devices

The ML561 contains a 300 MHz 36-bit RLDRAM II interface using two Micron MT49H16M18BM-25 devices (x18) packaged in a 144-ball PBGA package. They share a common address and control bus but have separate clocks and DQS/DQ signals.

Memory Details

DDR400 and DDR2 Component Memories

The FPGA #1 device on the Virtex-5 FPGA ML561 Development Board is connected to DDR and DDR2 component memories, as shown in Figure 3-3.

Figure 3-3 summarizes the distribution of DDR and DDR2 discrete component interface signals among the different banks of the FPGA #1 device.

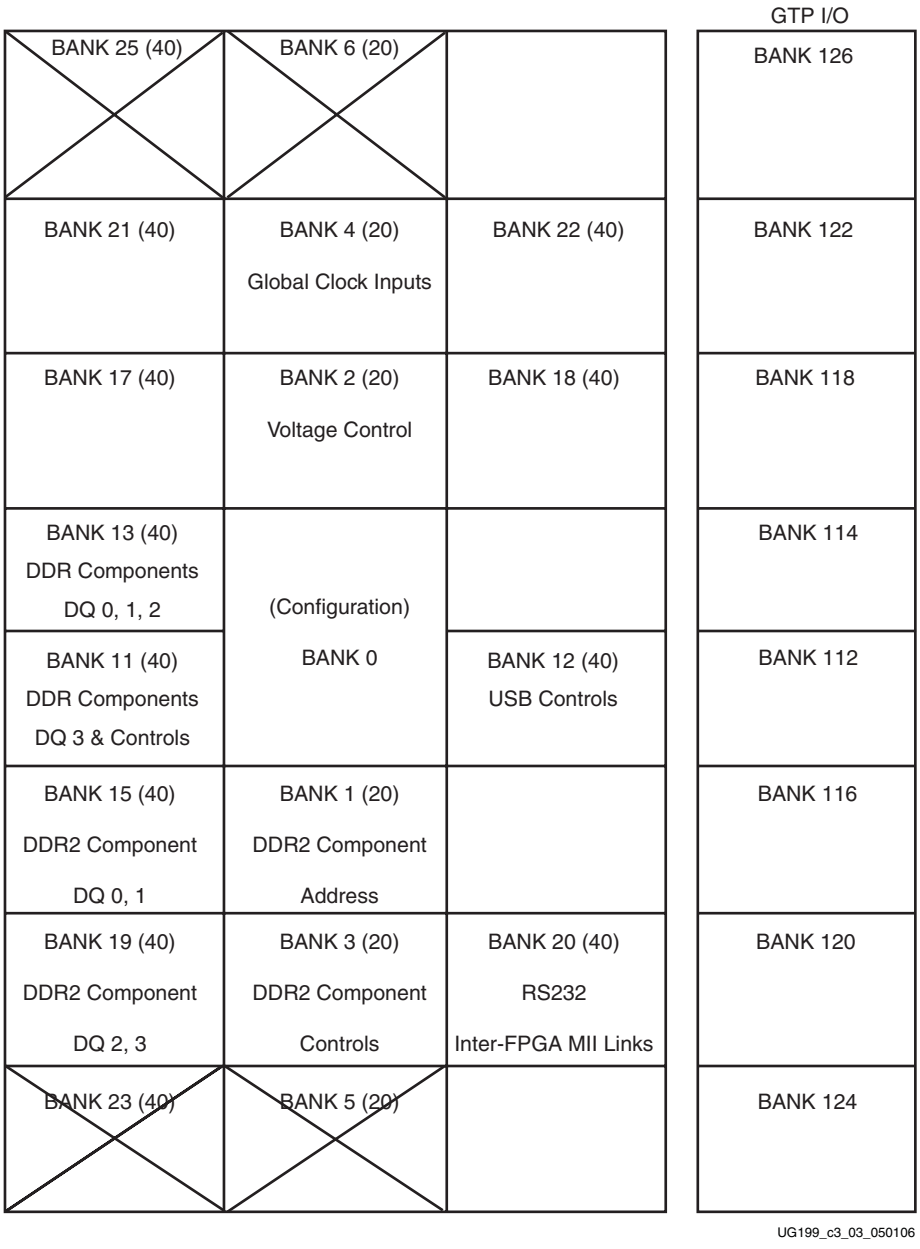

Figure 3-3: **FPGA #1 Banks for DDR400 and DDR2 Component (Top View)**

Table 3-3 describes all signals associated with DDR400 Component memories.

Table 3-3: **DDR400 Component Signal Summary**

Board Signal Name(s)	Bits	Description
DDR1_A[13:0]	14	DDR400 Component Address
DDR1_CK[2:1]_[P,N]	4	DDR400 Component Differential Clock
DDR1_[RAS,CAS,WE]_N, DDR1_CKE, DDR1_BA[1:0], DDR1_BY[0_1,2_3]_CS_N, DDR1_DM_BY[3:0]	12	DDR400 Component Control Signals
DDR1_DQ_BY0_B[7:0], DDR1_DQS_BY0_P	9	DDR400 Data and Strobe: Byte 0
DDR1_DQ_BY1_B[7:0], DDR1_DQS_BY1_P	9	DDR400 Data and Strobe: Byte 1
DDR1_DQ_BY2_B[7:0], DDR1_DQS_BY2_P	9	DDR400 Data and Strobe: Byte 2
DDR1_DQ_BY3_B[7:0], DDR1_DQS_BY3_P	9	DDR400 Data and Strobe: Byte 3

Notes:

1. DDR1_CKE signal has a weak 4.7KΩ pull-down resistor to meet the memory power-up requirements.

Table 3-4 describes all signals associated with DDR2 Component memories. For a complete list of FPGA #1 signals and their pin locations, refer to Appendix A, "FPGA Pinouts."

Table 3-4: **DDR2 Component Signal Summary**

Board Signal Name(s)	Bits	Description
DDR2_A[12:0]	13	DDR2 Component Address
DDR2_CK[1:0]_[P,N]	4	DDR2 Component Differential Clock
DDR2_ODT[1:0], DDR2_[RAS,CAS,WE]_N, DDR2_CKE, DDR2_BA[1:0], DDR2_CS[1:0]_N, DDR2_DM_BY[3:0]	14	DDR2 Component Control Signals
DDR2_DQ_BY0_B[7:0], DDR2_DQS_BY0_[P,N]	10	DDR2 Data and Strobe: Byte 0
DDR2_DQ_BY1_B[7:0], DDR2_DQS_BY1_[P,N]	10	DDR2 Data and Strobe: Byte 1
DDR2_DQ_BY2_B[7:0], DDR2_DQS_BY2_[P,N]	10	DDR2 Data and Strobe: Byte 2
DDR2_DQ_BY3_B[7:0], DDR2_DQS_BY3_[P,N]	10	DDR2 Data and Strobe: Byte 3

Notes:

1. DDR2_CKE and DDR2_ODT[1:0] signals have a weak 4.7KΩ pull-down resistor to meet the memory power-up requirements.

XAPP851, *DDR SDRAM Controller Using Virtex-5 FPGA Devices*, XAPP858, *High-Performance DDR2 SDRAM Interface in Virtex-5 Devices*, and the corresponding demos are included on the CD shipped with the ML561 Tool Kit. For a complete list of FPGA #1 signals and their pin locations, refer to Appendix A, "FPGA Pinouts."

DDR2 SDRAM DIMM

The FPGA #2 device on the Virtex-5 FPGA ML561 Development Board is connected to DDR2 memories. The DDR2 memory interface includes a 144-bit wide DIMM connection to up to five 240-pin DDR2 DIMM sockets.

For the 144-bit wide DIMM datapath, the data bytes are spread across multiple banks of the FPGA #2 device. Figure 3-4 summarizes the distribution of DDR2 DIMM interface signals among the different banks of the FPGA #2 device.

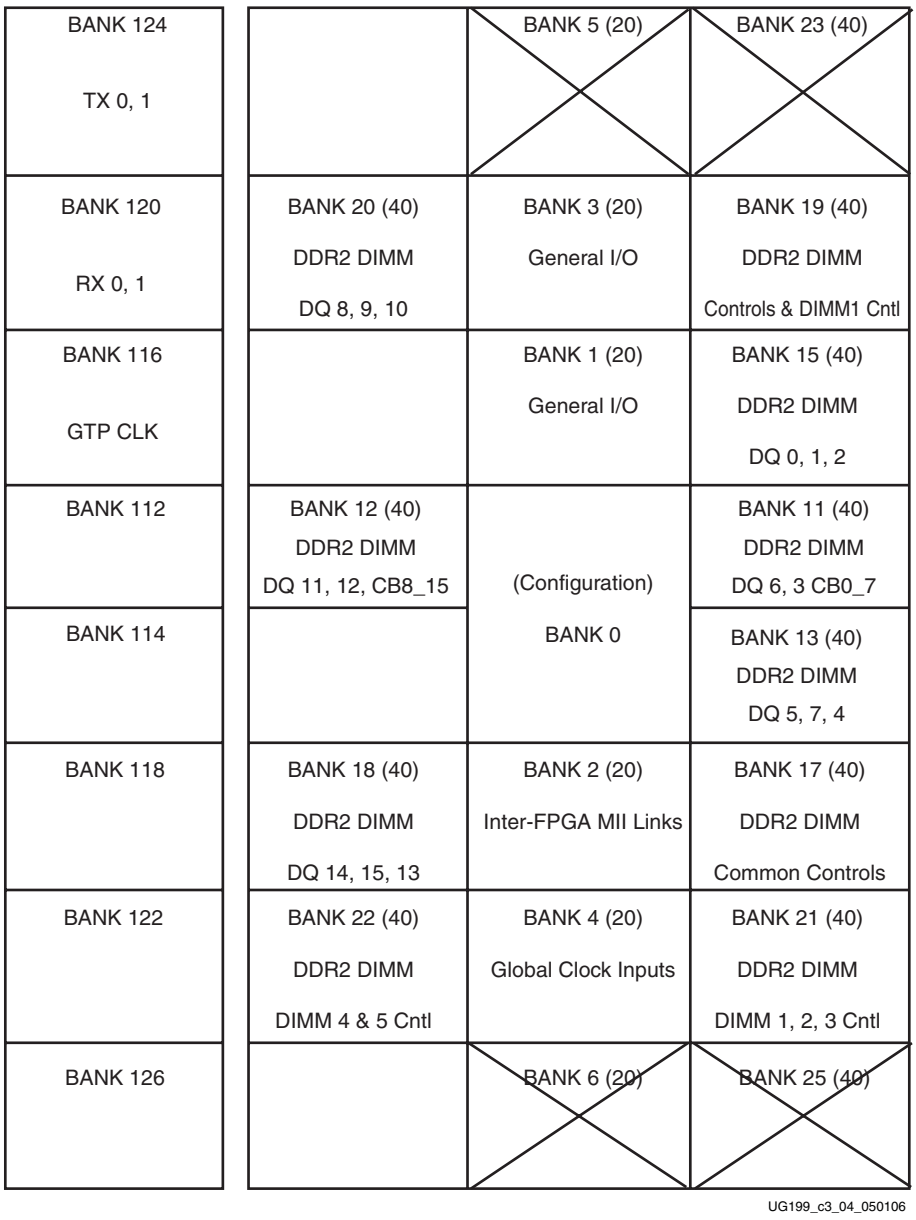

Figure 3-4: **FPGA #2 Banks for DDR2 DIMM (SSTL18) Interfaces (Top View)**

Table 3-5 describes all the signals associated with DDR2 DIMM component memories. For the Deep DIMM interface to four DIMMs, the individual dedicated control signals are listed at the bottom of Table 3-5.

Table 3-5: **DDR2 DIMM Signal Summary**

Board Signal Name(s)	Bits	Description
DDR2_DIMM_A[15:0]	16	DDR2 DIMM Address
DDR2_DIMM[5:1]_CK[2:0]_[P,N]	30	DDR2 DIMM Differential Clocks: Three copies per DIMM
DDR2_DIMM_[RAS,CAS,WE,RESET]_N, DDR2_DIMM[5:1]_CKE[1:0], DDR2_DIMM_BA[2:0], DDR2_DIMM[5:1]_CS[1:0]_N, DDR2_DIMM[5:1]_ODT[1:0]	37	DDR2 DIMM Common Control Signals
DDR2_DIMM[1:5]_CS[1:0]_N, DDR2_DIMM[1:5]_CKE[1:0], DDR2_DIMM[1:5]_ODT[1:0]	20	DDR2 DIMM Dedicated Control Signals
DDR2_DIMM_LB_BK[11,13,15]_[IN,OUT]	6	Deep DIMMs (DIMM1 through DIMM4) Loopback Signals
DDR2_DIMM_LB_BK[12,18,20]	3	Wide DIMM (DIMM5) Loopback Signals (Total of six FPGA pins)
DDR2_DIMM[1:5]_CNTL_PAR, DDR2_DIMM[1:5]_CNTL_PAR_ERR, DDR2_DIMM[1:5]_NC_019, DDR2_DIMM[1:5]_NC_102	20	Miscellaneous Place Holder Signals to the Five DIMMs
DDR2_DIMM_DQ_BY[0:15]_B[7:0], DDR2_DIMM_DQS_BY[0:15]_L_[P,N], DDR2_DIMM_DM_BY[0:15]	176	DDR2 DIMM Data, Strobes, and Data Mask: Bytes 0 through 15
DDR2_DIMM_DQ_CB0_7_B[7:0], DDR2_DIMM_DQS_CB0_7_L_[P,N], DDR2_DIMM_DM_CB0_7	11	DDR2 DIMM Data, Strobes, and Data Mask: Check Byte 0
DDR2_DIMM_DQ_CB8_15_B[7:0], DDR2_DIMM_DQS_CB8_15_L_[P,N], DDR2_DIMM_DM_CB8_15	11	DDR2 DIMM Data, Strobes, and Data Mask: Check Byte 1
DDR2_DIMM[1:5]_SA[2:0]	15	Serial PROM Address
DDR2_DIMM_[SCL,SDA]"	2	Serial PROM interface CLK and Data

Notes:

1. DDR2_DIMM_CKE and DDR2_DIMM_ODT signals are connected to a 4.7KΩ pull-down resistor to meet the memory power-up requirements.

XAPP858, *High-Performance DDR2 SDRAM Interface in Virtex-5 Devices* and its corresponding demo are included on the CD shipped with the ML561 Tool Kit.

QDRII and RLDRAM II Memories

Figure 3-5 summarizes the distribution of QDRII and RLDRAM II component interface signals among the different banks of the FPGA #3 device.

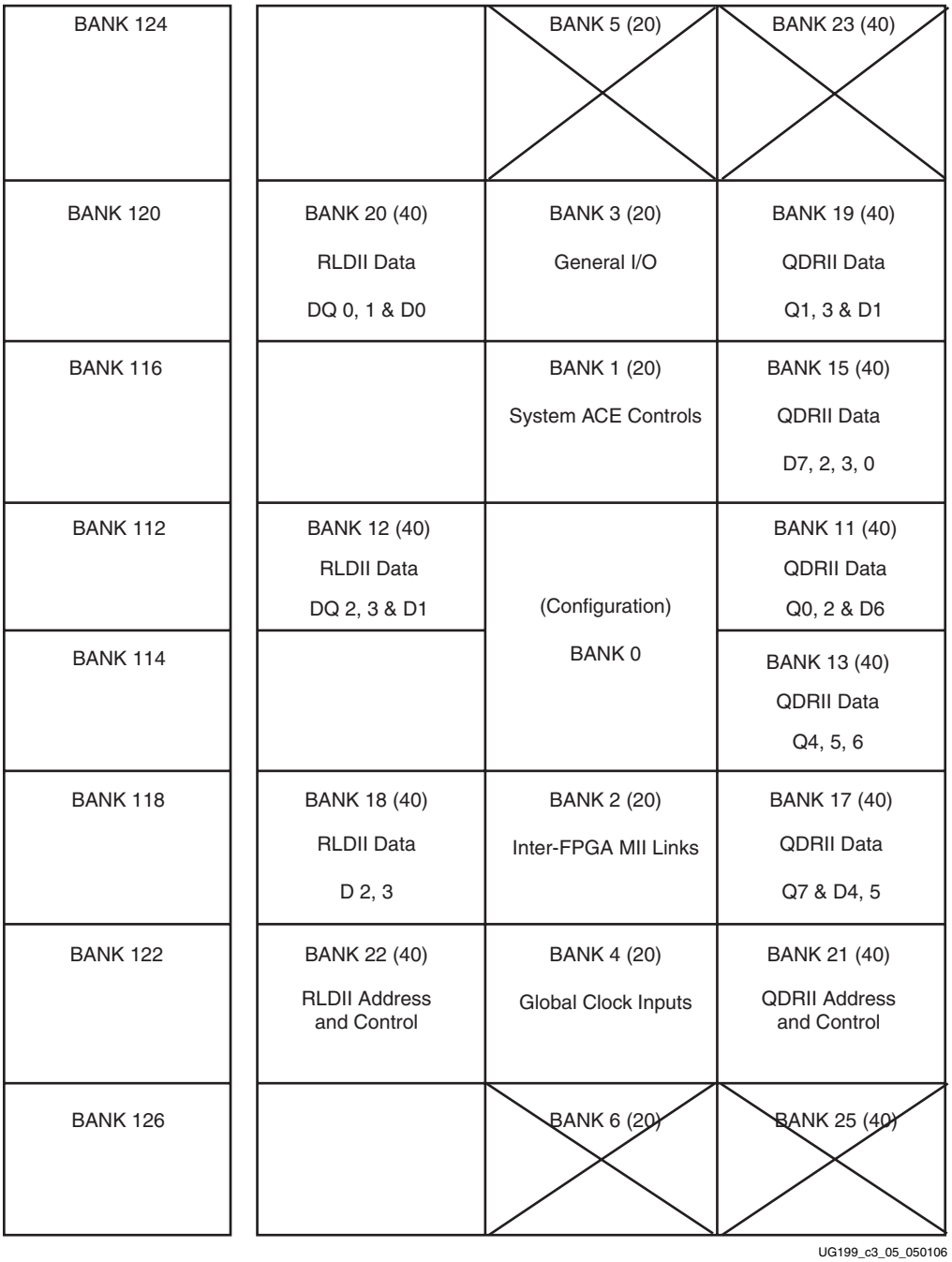

Figure 3-5: **FPGA #3 Banks for QDRII SRAM and RLDRAM II Interfaces (Top View)**

Table 3-6 describes all the signals associated with QDRII component memories.

Table 3-6: **QDRII Component Signal Summary**

Board Signal Name(s)	Bits	Description
QDR2_SA[18:0]	19	QDRII Address
QDR2_CK_BY0_3_[P,N], QDR2_CK_BY4_7_[P,N]	4	QDRII Differential Clock
QDR2_[R,W,DLL_OFF]_N	3	QDRII Control Signals
QDR2_D_BY[3:0]_B[8:0], QDR2_K_BY0_3_[P,N], QDR2_BW_BY[3:0]	42	QDRII Write Data, Strobes, and Byte Write: Bytes 3:0
QDR2_Q_BY[3:0]_B[8:0], QDR2_CQ_BY0_3_[P,N]	38	QDRII Read Data and Strobes: Bytes 3:0
QDR2_D_BY[7:4]_B[8:0], QDR2_K_BY4_7_[P,N], QDR2_BW_BY[3:0]	42	QDRII Write Data, Strobes, and Byte Write: Bytes 7:4
QDR2_Q_BY[7:4]_B[8:0], QDR2_CQ_BY4_7_[P,N]	38	QDRII Read Data and Strobes: Bytes 7:4

Notes:

1. QDR2_SA[18] is incorrectly labeled QDR2_NC_A3 in the ML561 schematics and layout file.

XAPP853: *QDR II SRAM Interface for Virtex-5 Devices* and its corresponding demo are included on the CD shipped with the ML561 Tool Kit.

For a complete list of FPGA #3 signals and their pin locations, refer to Appendix A, "FPGA Pinouts."

Table 3-7 describes all signals associated with RLDRAM II devices.

Table 3-7: **RLDRAM II Component Signal Summary**

Board Signal Name(s)	Bits	Description
RLD2_A[19:0], RLD2_BA[2:0]	23	RLDRAM II Address
RLD2_CK_BY0_1 _[P,N]	2	RLDRAM II Differential Clock
RLD2_CK_BY2_3 _[P,N]	2	RLDRAM II Differential Clock
RLD2_CS_BY[0_1,2_3]_N, RLD2_[REF,WE]_N, RLD2_DM_BY[0_1,2_3]_N, RLD2_QVLD_BY[0_1,2_3]	8	RLDRAM II Control Signals
RLD2_DQ_BY[1:0]_B[8:0], RLD2_DK_BY0_1_[P,N], RLD2_QK_BY[1:0]_[P,N]	24	RLDRAM II Data and Strobes: Bytes 1:0
RLD2_DQ_BY[3:2]_B[8:0], RLD2_DK_BY0_1_[P,N], RLD2_QK_BY[3:2]_[P,N]	24	RLDRAM II Data and Strobes: Bytes 3:2

XAPP852, *RLDRAM II Memory Interface for Virtex-5 FPGAs* and its corresponding demo are included on the CD shipped with the ML561 Tool Kit.

External Interfaces

The external interfaces of the Virtex-5 FPGA ML561 Development Board are described in this section.

RS-232

The ML561 board provides an RS-232 serial interface using a Maxim MAX3316ECUP device. The maximum speed of this device is 460 Kbps.

Hooks are provided to connect and disconnect FPGAs to the RS-232 serial interface, by placing jumpers on headers based on the FPGA involved in the communication. Only one FPGA is allowed in the communication, and others must be disconnected before operation. The ML561 toolkit CD contains code to implement a UART core in one FPGA for interfacing with a host PC.

The RS-232 interface is accessible through a male DB-9 serial connector (P73).

Table 3-8: **RS-232 Jumper Settings**

To Connect FPGA # to DB-9 (P73)	TX	RX
FPGA #1	P52 Pin 2 -> P52 Pin 1	P53 Pin 2 -> P53 Pin 1
FPGA #2	P52 Pin 2 -> P51 Pin 1	P53 Pin 2 -> P54 Pin 1
FPGA #3	P52 Pin 2 -> P52 Pin 3	P53 Pin 2 -> P53 Pin 3

USB

Full-speed (12 Mbps) USB functionality is proved using a Silicon Laboratories CP2102-GM USB to RS-232 Bridge. RS-232 and USB signals are converted between one another so a RS-232 core needs to be implemented in the FPGA for communication. A level translator is used to convert between the 2.5V I/O of the FPGA and the 3.3V I/O the CP2102 uses.

Hooks are provided to connect and disconnect FPGAs to the USB connection, by placing jumpers on headers based on the FPGA involved in the communication. Only one FPGA is allowed in the communication, and others must be disconnected before operation.

The USB interface is accessible through a female 'A' USB connector (J29).

Table 3-9: **USB Jumper Settings**

To Connect FPGA # to DB-9 (J29)	TX	RX
FPGA #1	P36 Pin 2 -> P36 Pin 1	P22 Pin2 -> P22 Pin 1
FPGA #2	P36 Pin 2 -> P35 Pin 1	P22 Pin2 -> P23 Pin 1
FPGA #3	P36 Pin 2 -> P36 Pin 3	P22 Pin2 -> P22 Pin 3

Clocks

The ML561 board contains a 200 MHz LVPECL clock oscillator and connectors for external clock inputs for use as system clocks (J19 and J20). The GTP transceivers use their own clock source that can be provided through SMA connectors on the board (J16 and J21).

200 MHz LVPECL Clock

The 200 MHz LVPECL clock source is an Epson EG-2121CA200M-PCHS oscillator (Y1) with a differential output. The oscillator runs at 200 MHz ± 100 PPM with an operating voltage of 2.5V ±5%. This output is fed into an ICS853006 LVPECL buffer for generating a separate differential copy for each FPGA as well as a test point (P59).

Table 3-10: **FPGA 200 MHz IDELAY Reference Clock Source**

FPGA #	Signal Name
1	DIRECT_CLK_TO_FPGA1_P
1	DIRECT_CLK_TO_FPGA1_N
2	DIRECT_CLK_TO_FPGA2_P
2	DIRECT_CLK_TO_FPGA2_N
3	DIRECT_CLK_TO_FPGA3_P
3	DIRECT_CLK_TO_FPGA3_N

SMA Clock

Two SMA connectors are provided for the input of an off-board differential clock (J19 and J20). A differential clock buffer (ICS853006) is used on the board (U17 and U18) to generate four LVPECL copies of the differential clock signal, one for each FPGA along with a probe point (P40) for testing. The traces from the buffer are routed as a differential pair to each FPGA where they are terminated with 100Ω differential termination.

Table 3-11: **FPGA External Clock Sources**

FPGA #	Signal Name
1	EXT_CLK_TO_FPGA1_P
1	EXT_CLK_TO_FPGA1_N
2	EXT_CLK_TO_FPGA2_P
2	EXT_CLK_TO_FPGA2_N
3	EXT_CLK_TO_FPGA3_P
3	EXT_CLK_TO_FPGA3_N

33 MHz Clock

A single-ended 33 MHz Epson SG-8002CA oscillator is provided on the board (Y2) for testing purposes. Four copies of this clock are generated using a clock buffer (ICS8304) on the board, one per FPGA along with a probe point for testing (P41).

The application using this clock source as an input to the PLL on the Virtex-5 device has not yet been fully verified.

Table 3-12: **FPGA Slow Clock Sources**

FPGA	Signal Name
1	FPGA1_LOW_FREQ_CLK
2	FPGA2_LOW_FREQ_CLK
3	FPGA3_LOW_FREQ_CLK

33 MHz System ACE Controller Oscillator

A single-ended 33 MHz Epson SG-8002CA oscillator is provided on the board (Y3) as a clock source for System ACE functionality.

GTP Clocks

Two SMA connectors are provided for the input of an off-board differential clock (J16 and J21). A differential clock buffer (ICS8543BG) is used on the board (U20) to generate four LVDS copies of the differential clock signal, two for FPGA #1, one for FPGA #2, and one for FPGA #3.

A header is used to select between a clock forwarded by the GTP or from the external clock source used to provide a clock to the FPGA logic.

User I/Os

This subsection describes the devices that connect to the User I/Os of the ML561 board. These I/Os are provided to ease hardware development using the ML561.

General-Purpose Headers

The 16-pin test headers are surface mounted, one per FPGA. Of the two bytes of test signals, traces are matched for signals within a byte.

Table 3-13: **Test Headers**

Header Signal Description	Location	Header Pin #
FPGA1_TEST_HDR_BY0_B[0:7]	P20 (TEST1)	Odd pins: 1, 3, 5, 7, 9, 11, 13, 15
FPGA1_TEST_HDR_BY1_B[0:7]	P20 (TEST1)	Even pins: 2, 4, 6, 8, 10, 12, 14, 16
FPGA2_TEST_HDR_BY0_B[0:7]	P21 (TEST2)	Odd pins: 1, 3, 5, 7, 9, 11, 13, 15
FPGA2_TEST_HDR_BY1_B[0:7]	P21 (TEST2)	Even pins: 2, 4, 6, 8, 10, 12, 14, 16
FPGA3_TEST_HDR_BY0_B[0:7]	P93 (TEST3)	Odd pins: 1, 3, 5, 7, 9, 11, 13, 15
FPGA3_TEST_HDR_BY1_B[0:7]	P93 (TEST3)	Even pins: 2, 4, 6, 8, 10, 12, 14, 16

DIP Switch

One four-position DIP switch per FPGA (for a total of three) is available to externally pull up or pull down a signal on the FPGA. This can be used to manually set values used by the design running on the FPGA.

Seven-Segment Displays

One seven-segment display per FPGA (for a total of three) is available for use. The red Stanley-Electric NAR131SB displays are active Low, using seven inputs to display a character or number plus another input for a decimal point.

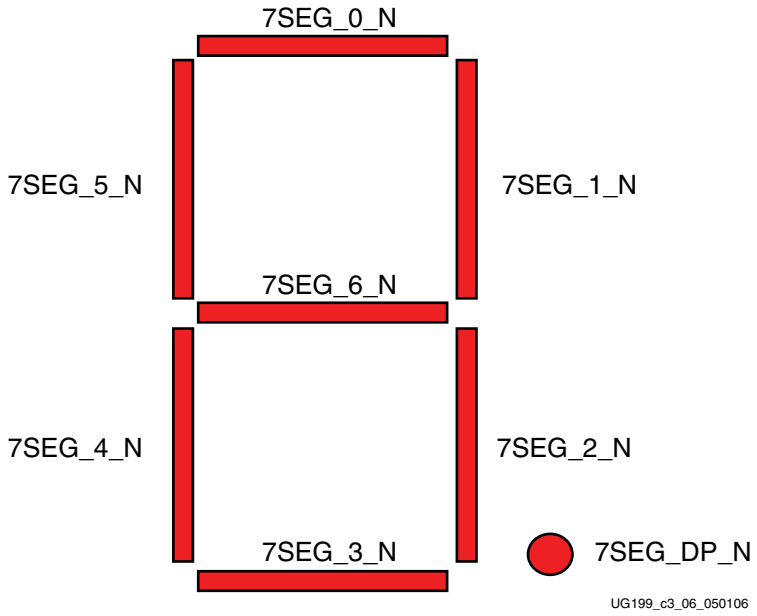

Figure 3-6: **Seven-Segment Display Signal Mapping**

Light Emitting Diodes (LEDs)

Each FPGA is able to control four active-high green LEDs. The green is used to distinguish the User LEDs from the blue system LEDs on the Virtex-5 FPGA ML561 Development Board.

Pushbuttons

The ML561 board contains two momentary pushbuttons. Their functions and locations are described in Table 3-14.

Table 3-14: **User Pushbuttons**

Button	Description	Pin Connection
SW7	**PROG_B**: Configure FPGA	System ACE Controller: Pin 33
SW4	**RESET_N**: Reset the FPGA designs	FPGA #1: AH14 FPGA #2: AH14 FPGA #3: AH14

The Reset signal goes to a buffer (U32) that provides a separate copy of Reset to each FPGA.

Power On or Off Slide Switch

The power on or off slide switch is a DPST slide switch used to apply input power to the board. While the board contains two such switches, the 5V switch is primarily used to supply 5V power to the board, whereas the 12V switch is available for testing only.

Soft Touch Probe Points

Soft Touch E5396A Probeless connection points are provided for monitoring FPGA #2 and FPGA #3 test signals with a compatible Agilent logic analyzer. FPGA #2 uses separate test signals for soft touch pins, while FPGA #3 shares the general-purpose test header signals with soft touch pins due to lack of available I/O pins.

Power Measurement Header

The ML561 comes with a 3M Pak 100 power measurement header to enable easy measurement of the power being consumed by the devices on the ML561. Each power regulator uses an Isotek Kelvin current sense resistor (SMV-R010-0.5) in the path from the output of the regulator to the power plane. The power can be computed by measuring the voltage drop across each of these resistors.

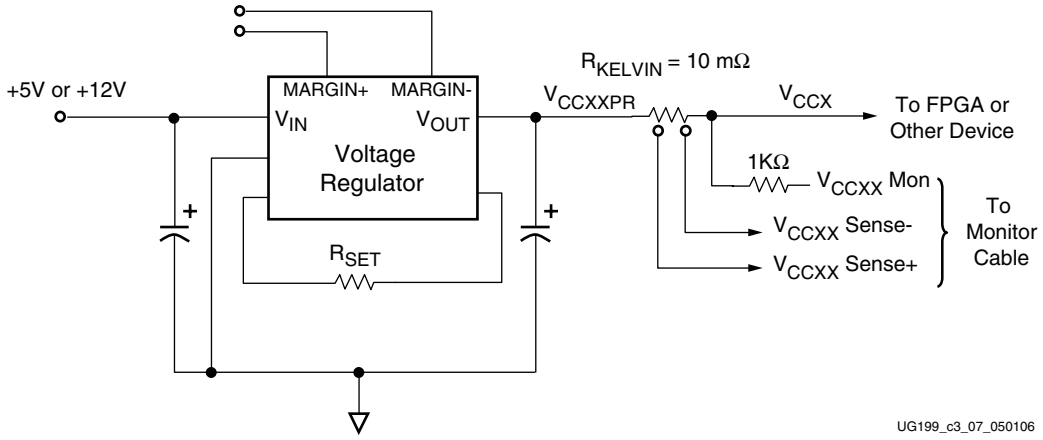

Figure 3-7: **Virtex-5 FPGA ML561 Development Board Power Measurement System**

Table 3-15: **Power Measurement Header Pins (P102)**

Header Signal	Power Header Pin #
VCC1V0_SENSE+	1
VCC1V0_SENSE-	2
VCC1V0_MON	3
VCC2V5_SENSE+	5
VCC2V5_SENSE-	6
VCC2V5_MON	7
VCC3V3_SENSE+	9
VCC3V3_SENSE-	10
VCC3V3_MON	11

Table 3-15: **Power Measurement Header Pins (P102) *(Continued)***

Header Signal	Power Header Pin #
VCC1V8_SENSE+	13
VCC1V8_SENSE-	14
VCC1V8_MON	15
VCC1V5_SENSE+	17
VCC1V5_SENSE-	18
VCC1V5_MON	19
VCC2V6_SENSE+	21
VCC2V6_SENSE-	22
VCC2V6_MON	23
VCC5_SENSE+	25
VCC5_SENSE-	26
VCC5_MON	24
VCC5	20
GND	4
GND	8
GND	12
GND	16

Liquid Crystal Display Connector

Previous memory boards such as the ML461 had a DisplaytechQ 64128E-FC-BC-3LP 64x128 LCD panel. This display was removed from the ML561, but the connection is still available for use with embedded systems if the user connects the display to connector (P104). The LCD panel needs to hang off the edge of the board as shown in Figure 3-8.

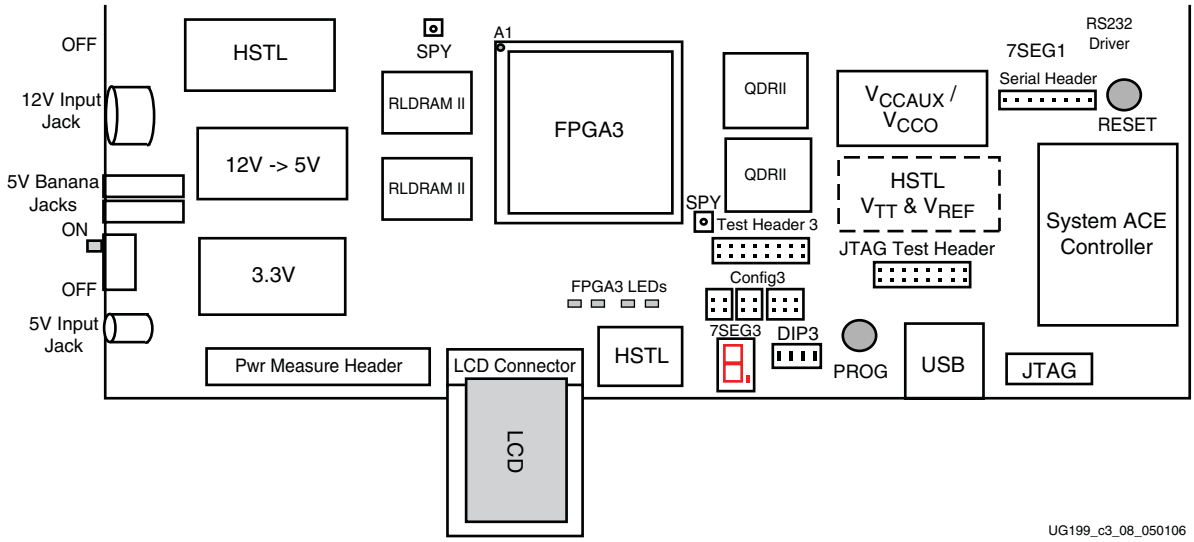

Figure 3-8: **LCD Panel Connector for Possible LCD Support**

The product specification at http://www.displaytech.com.hk/pdf/graphic/64128e%20series-v10.PDF provides more information. Appendix C, "LCD Interface," describes the LCD operation in detail.

Power Regulation

This section describes the devices that supply power to the Virtex-5 FPGA ML561 Development Board. For electrical requirements and power consumption, see Chapter 4, "Electrical Requirements."

Power Distribution

The ML561 board uses +5V to drive numerous voltage regulators. Figure 3-9 shows a general overview of the power distribution system.

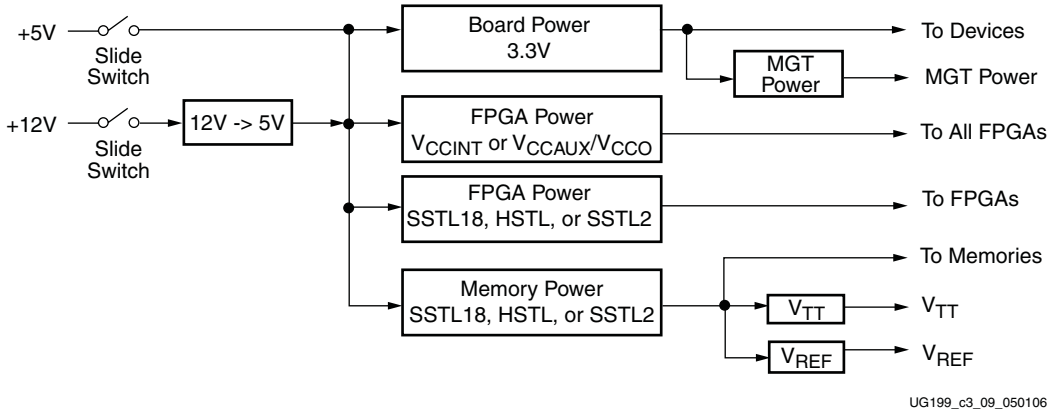

Figure 3-9: **Virtex-5 FPGA ML561 Development Board Power Distribution System**

The Virtex-5 FPGA ML561 Development Board is powered through the +5V input jack (J28) from the power supply included in the ML561 Tool Kit. Alternatively, the +5V can

also be supplied from a bench supply using the two banana jacks: J25 (RED) for +5V and J24 (BLACK) for GND.

The Rev-A assembly of the Virtex-5 FPGA ML561 Development Board does not support the +12V input via jack J23 or via banana jacks J18 (RED) for +12V and J17 (BLACK) for GND.

The memory and FPGAs use separate power supplies for SSTL18, HSTL, and SSTL2, respectively. Thus the power being consumed can be easily measured for each using the power measurement header provided on the ML561.

Voltage Regulators

The +5V voltage source is supplied as input to nine on-board regulator modules. Six of those modules (TI PTH05010-WAZ) are used to generate the +1.0V, +2.5V, and +1.8V for SSTL18 at FPGA #1 and FPGA #2, +1.8V for HSTL18 at FPGA #3, +2.6V for SSTL2 at FPGA #1, and +3.3V voltages for the GTP power supplies, LEDs, etc. The remaining three modules (TI PTH05000-ADJ) are used to generate +1.8V for SSTL18 at the memories, +1.8V for HSTL at the memories, and +2.6V for SSTL2 at the memories.

An additional three bulk voltage regulators (Fairchild FN6555) are used to generate termination (V_{TT}) and reference (V_{REF}) voltages each for the SSTL2, SSTL18, and HSTL power levels. By design, these voltage levels are half of the input reference voltage being supplied by the memory power supplies.

The TI PTH05010-WAZ and TI PTH05000-ADJ regulator modules require a fixed 5V input. The output is adjustable over a range of 0.9V to 3.6V by changing the resistor tied between pin 4 and GND. The difference between these two modules is that the PTH05010-WAZ output voltage can be margined up to+ 5% of the nominal value by driving pin 10 to GND (or digital Low), or margined down to -5% of the nominal value by driving pin 9 Low. The PTH05010-WAZ also has a tracking feature that can be used to track another voltage source.

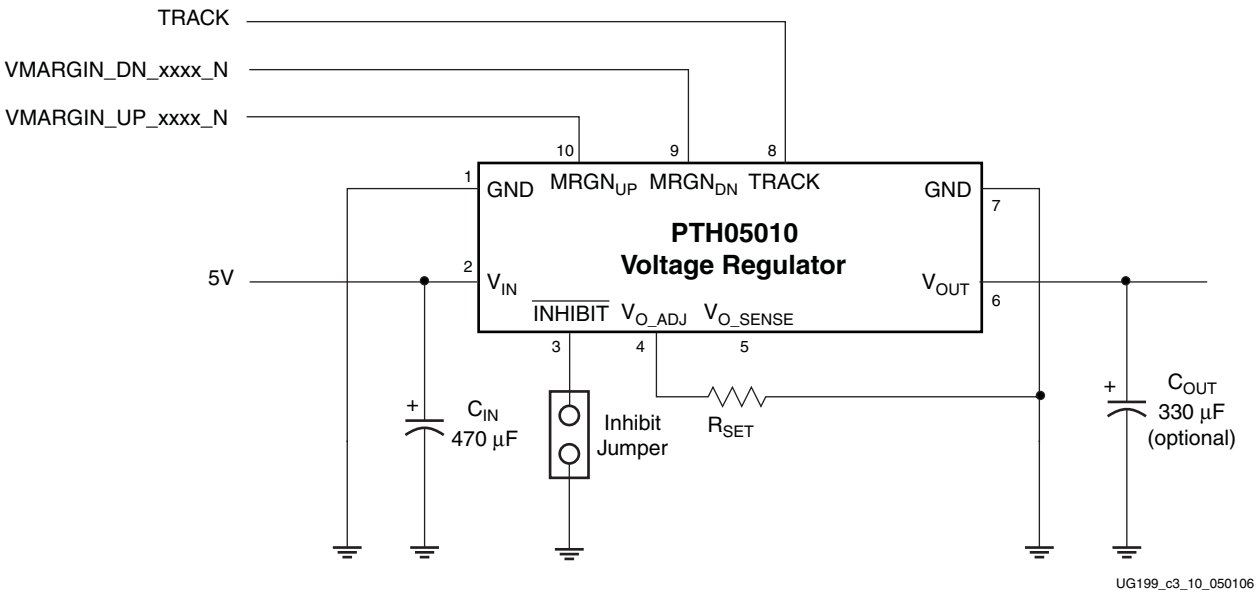

Figure 3-10: **PTH05010 Voltage Regulator**

There are two ways to apply the digital controls to the margin input pins of the PTH05010: either from FPGA #1 or manually with jumpers.

The FPGA can drive VMARGIN_DN_xxxx_N and VMARGIN_UP_xxxx_N signals, where xxxx indicates one of the six main power regulators: SSTL2, HSTL, SSTL18, VCC1V0, VCC2V5, and VCC3V3.

Table 3-16: **Manual Voltage Margining**

VMARGIN_UP_N	VMARGIN_DN_N	Output Voltage
High	High	Nominal
High	Low	-5%
Low	High	+5%
Low	Low	Not Applicable

If both voltage-margining inputs to the power regulator are pulled Low, the output voltage is close to nominal but has the possibility of a slightly higher error in the output voltage. The power modules use a low-leakage *open-drain* control signal to control the voltage margining. In the FPGA, this can be approximated by using a control signal that drives the output Low when active and does not drive the signal at all when inactive (high-impedance output).

Three-pin headers are available for performing manual voltage margining, using jumpers to select between Nominal, -5%, and +5%. Table 3-17 shows the jumper settings.

Table 3-17: **FPGA #1 Signals and On-Board Jumpers for Voltage Margining**

Power Regulator	Signal Name	Jumper Setting
V_{CCINT} (VR6)	VMARGIN_UP_VCC1V0_N	P48: 1 -> 2
	VMARGIN_DN_VCC1V0_N	P48: 3 -> 2
SSTL18 (VR1)	VMARGIN_UP_SSTL18_N	P4: 1 -> 2
	VMARGIN_DN_SSTL18_N	P4: 3 -> 2
SSTL2 (VR9)	VMARGIN_UP_SSTL2_N	P450 1 -> 2
	VMARGIN_DN_SSTL2_N	P50: 3 -> 2
HSTL (VR10)	VMARGIN_UP_HSTL_N	P58: 1 -> 2
	VMARGIN_DN_HSTL_N	P58: 3 -> 2
V_{CCAUX} (VR12)	VMARGIN_UP_VCC2V5_N	P69: 1 -> 2
	VMARGIN_DN_VCC2V5_N	P69: 3 -> 2

The TI PTH05010-WAZ and TI PTH05000-ADJ regulator outputs can be enabled or inhibited through the use of on-board two-pin jumpers. The inhibit jumpers use the following conventions:

- Jumper OFF = Enabled
- Jumper ON = Inhibited

Table 3-18 summarizes the inhibit headers.

Table 3-18: **Headers for Voltage Regulator Inhibition**

Power Regulator	Inhibit Header
V_{CCINT} (VR6)	P63
SSTL18 (VR1)	P11
SSTL18_M (VR4)	P32
SSTL2 (VR9)	P68
SSTL2_M (VR2)	P5
HSTL (VR10)	P74
HSTL_M (VR14)	P105
V_{CCAUX} (VR12)	P79
VCC3V3 (VR13)	P101

Board Design Considerations

UG086, *Memory Interface Generator (MIG) User Guide* includes PCB implementation rules and guidelines to be followed for designing a board for a MIG reference design.

The Virtex-5 FPGA ML561 Development Board design allows implementation of DCI termination scheme at the FPGA for each of the memory interfaces on the board. A preliminary analysis of the Weighted Average Simultaneously Switching Outputs (WASSO) for all three Virtex-5 devices indicates that the SSO guidelines are met for the current pinout. The following factors helped to reduce the SSO noise as compared to the Virtex-4 FPGA ML461 board implementation:

- SparseChevron pinout resulting in larger number of Power/GND pin pairs per bank
- A revised higher SSO allowance per Power/GND pair for SparseChevron packages
- Reduced thickness of the board (74 mils vs. 98 mils) resulting in reduced via inductance

External terminations at both the memory and FPGA are provided for data signals for most of the memory interfaces on the Virtex-5 FPGA ML561 Development Board layout. The external V_{TT} termination is implemented with a single 50Ω termination to the V_{REF} level. See Chapter 5, "Signal Integrity Recommendations," for specific recommendations and guidelines for terminations.

These are V_{TT} end terminations to the respective voltage levels for SSTL2, SSTL18, and HSTL signals. There are two topologies of end terminations for data signals:

1. Fly-by termination: The parallel termination is placed after the receiver pin.
2. Non-fly-by termination: The parallel termination is placed between the driver and the receiver along the trace as close to the receiver pin as possible. Also the stub from signal trace to the termination resistor is kept very short, within 0.1 inch.

For Read data, terminations at the FPGA have non-fly-by termination topology. These terminations can be selectively depopulated on the ML561 board when DCI termination is implemented inside FPGA for received data. Due to non-fly-by termination topology, the result is a minimal stub for the signal, thus preserving good signal integrity for read data.

For Write data and terminations at the memory, if the trace length from the receiver pin to the termination resistor can be guaranteed to be within 0.3 inches, then the fly-by termination scheme is implemented. Otherwise, the non-fly-by termination topology is implemented for Write data at the memory end.

The physical dimensions of the raw PCB are 12.75 inches x 11.75 inches. With the overhangs due to edge connectors, the actual size of the fully assembled board is approximately 13 inches x 12 inches, with 1.5 inches height allowance for the DIMM modules. This 14-layer board has 6 signal layers, 4 GND layers, and 4 power planes and uses Polyclad 370HR material for lead-free assembly. Figure 3-11 shows a stack-up diagram of the ML561 Revision A PCB.

Refer to UG203, *Virtex-5 PCB Designer's Guide* for more information on the PCB design using Virtex-5 devices.

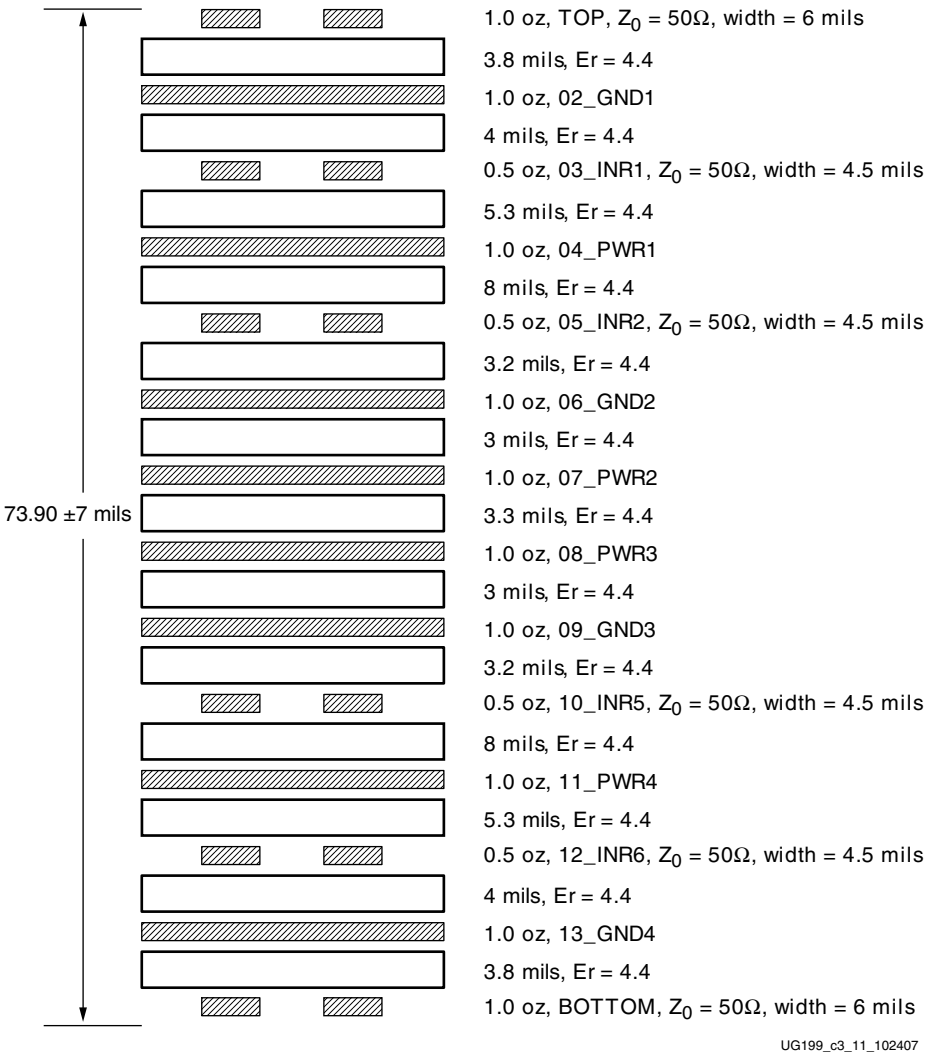

Figure 3-11: **ML561 Revision A PCB Stack-Up**

Table 3-19 shows the details of the dielectric material and construction for each layer and the controlled impedance values for the signal layers.

Table 3-19: **ML561 Revision A PCB Controlled Impedance**

Seq #	Layer Name	Type	Usage	Cu Weight (oz.)	Substrate Thickness (mils)	Er	Test Width (mils)	Z_0 (ohms)	Comment
1	TOP	Metal	Signal	1.0		<Auto>	6	50 ±5	Microstrip Signal Top
2		Dielectric	Substrate		3.8	4.4			
3	02_GND1	Metal	Plane	1.0		<Auto>			Ground Plane #1
4		Dielectric	Substrate		4	4.4			
5	03_INR1	Metal	Signal	0.5		<Auto>	4.5	50 ±5	Stripline Signal - Inner #1
6		Dielectric	Substrate		5.3	4.4			
7	04_PWR1	Metal	Plane	1.0		<Auto>			Split Power Plane #1
8		Dielectric	Substrate		8	4.4			
9	05_INR2	Metal	Signal	0.5		<Auto>	4.5	50 ±5	Stripline Signal - Inner #2
10		Dielectric	Substrate		3.2	4.4			
11	06_GND2	Metal	Plane	1.0		<Auto>			Ground Plane #2
12		Dielectric	Substrate		3	4.4			
13	07_PWR2	Metal	Plane	1.0		<Auto>			Split Power Plane #2
14		Dielectric	Substrate		3.3	4.4			
15	08_PWR3	Metal	Plane	1.0		<Auto>			Split Power Plane #3
16		Dielectric	Substrate		3	4.4			
17	09_GND3	Metal	Plane	1.0		<Auto>			Ground Plane #3
18		Dielectric	Substrate		3.2	4.4			
19	10_INR5	Metal	Signal	0.5		<Auto>	4.5	50 ±5	Stripline Signal - Inner #3
20		Dielectric	Substrate		8	4.4			
21	11_PWR4	Metal	Plane	1.0		<Auto>			Split Power Plane #4
22		Dielectric	Substrate		5.3	4.4			
23	12_INR6	Metal	Signal	0.5		<Auto>	4.5	50 ±5	Stripline Signal - Inner #4
24		Dielectric	Substrate		4	4.4			
25	13_GND4	Metal	Plane	1.0		<Auto>			Ground Plane #4
26		Dielectric	Substrate		3.8	4.4			
27	BOTTOM	Metal	Signal	1.0		<Auto>	6	50 ±5	Microstrip Signal Bottom

XILINX®

Chapter 4

Electrical Requirements

This chapter provides the electrical requirements for the Virtex-5 FPGA ML561 Development Board. It contains the following sections:

- "Power Consumption"
- "FPGA Internal Power Budget"

Power Consumption

Table 4-1 lists the operating voltages, maximum currents, and power consumption used by the ML561 board devices. The Virtex-5 FPGA ML561 Development Board has provisions for two power inputs: a 5V power supply and a 12V power supply. The maximum rating of a commercially available 5V power supply is limited to 8A, or a 40W maximum capacity. This power supply is similar to the 5V brick used for previous memory tool kits, for example, ML461. This tool kit expects the Virtex-5 FPGA ML561 Development Board to exercise only one external memory interface at a time. In this case, the total power consumption of the board stays within the 40W limit.

As shown in Table 4-1, if all three FPGA devices and their associated memory devices are activated simultaneously, then the total power consumption is approximately 57W, which exceeds the 40W capacity of the 5V power brick. So an alternate 12V power input jack (J23) is provided on the Virtex-5 FPGA ML561 Development Board to hook up a 12V power brick, for example, CUI DTS120500U with a 60W capacity. The 12V is converted to 5V using the TI PTH12010WAS power module (VR11), which can supply up to 12A of current at 5V, or a 60W capacity.

Table 4-1: **ML561 Power Consumption**

Device Description	Quantity	Voltage (V)	Current (mA)	Power (W)	Source
Total Available Power					
5V Power Supply	1	5.0	8000	40.0	Bellus Power SPD-050-5
12V Power Supply	1	12.0	5000	60.0	CUI DTS120500U
Power Consumed					
DDR400 Component Interface					
XC5VLX50T-FFG1136: FPGA #1 (DDR400)	1	1.0, 2.5, 2.6	1887	3.7	Xilinx Power Estimator
DDR x16 Memory	2	2.6	210	1.1	Micron DDR Component Data Sheet
DDR Comp V_{TT} Termination	60	1.2	16	1.2	All signals. ±608 mV swing around V_{TT}
DDR2 Component Interface					
XC5VLX50T-FFG1136: FPGA #1 (DDR2)	1	1.0, 1.8[S], 2.5	1991	3.1	Xilinx Power Estimator
DDR2 x16 Memory	2	1.8	250	0.9	Micron DDR2 Component Data Sheet
DDR2 Comp V_{TT} Termination	25	1.2	16	0.5	Addr/Cntl: ± 603 mV swing around V_{TT}
DDR2 DIMM Interface					
XC5VLX50T-FFG1136: FPGA #2 (DDR2)	1	1.0, 1.8[S], 2.5	6420	10.2	Xilinx Power Estimator
DDR2 DIMM	2	1.8	1755	6.3	Micron DDR2 DIMM Data Sheet
DDR2 DIMM V_{TT} Termination	160	1.2	16	3.1	All signals: ± 603 mV swing around V_{TT}
QDRII Memory Interface					
XC5VLX50T-FFG1136: FPGA #3 (QDRII)	1	1.0, 1.8[H], 1.8[S], 2.5	3917	6.3	Xilinx Power Estimator
QDRII Memory [H]	2	1.8	950	3.4	Samsung QDRII Data Sheet
QDRII V_{TT} Termination	175	1.0	16	2.8	All signals. ± 500 mV swing around V_{TT}
RLDRAM II Memory Interface					
XC5VLX50T-FFG1136: FPGA #3 (RLDRAM II)	1	1.0, 1.8[H], 2.5	3069	4.5	Xilinx Power Estimator
RLDRAM II Memory	2	1.8	920	3.3	Micron RLDRAM II Data Sheet
RLDRAM II V_{TT} Termination	60	1.0	16	1.0	All signals. ± 500 mV swing around V_{TT}
Miscellaneous Circuit					
Clock Buffer	1	3.3	23	0.1	ICS8304 Data Sheet
Differential Clock Buffer	2	3.3	115	0.8	ICS853006 Data Sheet
System ACE Controller	1	3.3	200	0.7	DS080, *System ACE CompactFlash Solution*
200 MHz Oscillator	1	2.5	30	0.1	Epson EG2121CA Data Sheet
33 MHz Oscillator	2	3.3	45	0.3	Epson SG-8002CA Data Sheet
Total Power Consumed				**53.2**	

Table 4-1: **ML561 Power Consumption *(Continued)***

Device Description	Quantity	Voltage (V)	Current (mA)	Power (W)	Source
Power Modules Capacity					
V_{CCINT} Power Plane (1.0V)	1	1.00	15000	15.0	TI PTH05010 15A Module Data Sheet
HSTL FPGA Power Plane (1.8V)	1	1.80	15000	27.0	
HSTL Memory Power Plane (1.8V)	1	1.80	6000	10.8	TI PTH05000 6A Module Data Sheet
HSTL _VREF Power Plane (0.9V)	1	0.90	3000	2.7	Fairchild FN6555 Data Sheet
SSTL18 FPGA Power Plane (1.8V)	1	1.80	15000	27.0	TI PTH05010 15A Module Data Sheet
SSTL18 Memory Power Plane (1.8V)	1	1.80	6000	10.8	TI PTH05000 6A Module Data Sheet
SSTL18 _VREF Power Plane (0.9V)	1	0.90	3000	2.7	Fairchild FN6555 Data Sheet
SSTL2 FPGA Power Plane (2.6V)	1	2.60	15000	39.0	TI PTH05010 15A Module Data Sheet
SSTL2 Memory Power Plane (2.6V)	1	2.60	6000	15.6	TI PTH05000 6A Module Data Sheet
SSTL2 _VREF Power Plane (1.3V)	1	1.30	3000	3.9	Fairchild FN6555 Data Sheet
2.5V Power Plane	1	2.50	15000	37.5	TI PTH05010 15A Module Data Sheet
3.3V Power Plane	1	3.30	15000	49.5	
12V-to-5V Converter	1	5.00	12000	60.0	TI PTH12010 12A Module Data Sheet

Notes:

1. [S] = 1.8V power for SSTL18 plane.
2. [H] = 1.8V power for HSTL18 plane.

Table 4-2 lists the 12 different power planes on the Virtex-5 FPGA ML561 Development Board. For the SSTL2, SSTL18, and HSTL power, separate power modules are implemented for V_{CCO} to FPGA, and V_{DD} to memory, allowing for ease of power measurement for the FPGAs. The power modules for V_{CCO} inputs are implemented with TI PTH05010 modules, which have provisions for ± 5% voltage margining pins.

Table 4-2: **Power Planes**

Voltage Regulator Module (VRM) Part	Power Plane	VRM REFDES	Stack-Up Layer
TI PTH05010 15A Modules	V_{CCINT} Power Plane (1.0V)	VR6	Layer 4
	SSTL18 FPGA Power Plane (1.8V)	VR1	Layer 7
	HSTL FPGA Power Plane (1.8V)	VR10	Layer 8
	V_{CCAUX} Power Plane (2.5V)	VR12	Layer 11
	SSTL2 FPGA Power Plane (2.6V)	VR9	Layer 8
	TTL Power Plane (3.3V)	VR13	Layer 11
TI PTH05000 6A Modules	SSTL18 Memory Power Plane (1.8V)	VR4	Layer 7
	HSTL Memory Power Plane (1.8V)	VR14	Layer 8
	SSTL2 Memory Power Plane (2.6V)	VR2	Layer 8
Fairchild FN6555 3A Bus Term Regulators (Separate outputs for V_{TT} and V_{REF})	SSTL18_VREF Power Plane (0.9V)	U14	Layer 8
	SSTL18_VTT Power Plane (0.9V)		Layer 8
	HSTL_VREF Power Plane (0.9V)	U42	Layer 7
	HSTL_VTT Power Plane (0.9V)		Layer 7
	SSTL2_VREF Power Plane (1.3V)	U2	Layer 7
	SSTL2_VTT Power Plane (1.3V)		Layer 7

Each of the three Fairchild FN6555 Bus Terminator Regulators has two voltage outputs: one each for V_{REF} and V_{TT}. The FN6555 regulator is a push-pull device rated at ± 3A for the V_{TT} output and 3 mA for the V_{REF} output.

Because the V_{REF} voltage is used by the FPGA and memory devices only as reference, the power supply does not source any real current. Thus the 3 mA capacity for the V_{REF} output is considered sufficient.

The V_{TT} voltage is guaranteed to within ± 20 mV of the V_{REF} output by the FN6555 regulator. The minimum driver output voltage swing around V_{REF} is specified for the SSTL18, SSTL2, and HSTL I/O standards as:

- SSTL2: ± 608 mV
- SSTL18: ± 603 mV
- HSTL: ± 500 mV (for HSTL18)

For a given memory interface, the maximum number of single-ended (non-differential) signals that might need to be pulled up or down at a time for QDRII is 144 data bits and approximately 30 address and control signals. The differential pair signals offset for the sink and source of current. With a continuous current capacity of 3A for the FN6555 regulator, the regulator can supply up to (3000 / 175) = 17 mA of current per signal. The maximum drive strength for a driver is specified at 16 mA. For a 50Ω V_{TT} termination, this

current can support a voltage swing of up to (16 mA * 50Ω) = 800 mV, which is sufficient to meet the output voltage specifications for SSTL18, SSTL2, and HSTL18 I/O standards.

Table 4-3 separates the power consumption information from Table 4-1 according to the nine TI power modules for the first set of nine power planes and the three Fairchild regulators for the V_{TT} power planes. The positive values in the *Excess Power* column of Table 4-3 show that each of the 14 modules can supply the necessary power for the corresponding power plane.

Table 4-3: **ML561 Power Plane Capacities**

Device Description	Quantity	Voltage (V)	Current (mA)	Power (W)	Excess Power (W)	Source
Total Available Power						
5V Power Supply	1	5.0	8000	40.0		Bellus Power SPD-050-5
12V Power Supply	1	12.0	5000	60.0		CUI DTS120500U
Power Consumed by Power Plane						
XC5VLX50T-FFG1136: FPGA #1 (DDR400, DDR2)	1	1.0	2289	2.3		Xilinx Power Estimator
XC5VLX50T-FFG1136: FPGA #2 (DDR2 DIMM)	1	1.0	1945	1.9		Xilinx Power Estimator
XC5VLX50T-FFG1136: FPGA #3 (QDRII and RLDRAM II)	1	1.0	2675	2.7		Xilinx Power Estimator
V_{CCINT} Power Plane (1.0V) Capacity	1	1.0	15000	15.0	8.1	TI PTH05010 15A Module Data Sheet
XC5VLX50T-FFG1136: FPGA #3 (QDRII and RLDRAM II)	1	1.8	3876	7.0		Xilinx Power Estimator
HSTL FPGA Power Plane (1.8V) Capacity	1	1.8	15000	27.0	20.0	TI PTH05010 15A Module Data Sheet
QDRII Memory [H]	2	1.8	950	3.4		Samsung QDRII Data Sheet
RLDRAM II Memory	2	1.8	920	3.3		Micron RLDRAM II Data Sheet
HSTL_Mem Power Plane (1.8V) Capacity	1	1.8	6000	10.8	4.1	TI PTH05000 6A Module Data Sheet
QDRII V_{TT} Termination	175	1.0	16	2.8		All signals. ± 500 mV swing around V_{TT}.
RLDRAM II V_{TT} Termination	60	1.0	16	1.0		All signals. ± 500 mV swing around V_{TT}.
HSTL _VREF Power Plane (0.9V)	1	0.9	3000	2.7	-0.1	Fairchild FN6555 Data Sheet
XC5VLX50T-FFG1136: FPGA #1 (DDR2)	1	1.8	1011	1.8		Xilinx Power Estimator
XC5VLX50T-FFG1136: FPGA #2 (DDR2 DIMM)	1	1.8	4258	7.7		Xilinx Power Estimator

Table 4-3: **ML561 Power Plane Capacities *(Continued)***

Device Description	Quantity	Voltage (V)	Current (mA)	Power (W)	Excess Power (W)	Source
SSTL18 FPGA Power Plane (1.8V) Capacity	1	1.8	15000	27.0	17.5	TI PTH05010 15A Module Data Sheet
DDR2 x16 Memory	2	1.8	250	0.9		Micron DDR2 Component Data Sheet
DDR2 DIMM	2	1.8	1755	6.3		Micron DDR2 DIMM Data Sheet
SSTL18_Mem Power Plane (1.8V) Capacity	1	1.8	6000	10.8	3.6	TI PTH05010 15A Module Data Sheet
DDR2 Comp V_{TT} Termination	25	1.2	16	0.5		Addr/Cntl: ± 603 mV swing around V_{TT}
DDR2 DIMM V_{TT} Termination	160	1.2	16	3.1		All signals: ± 603 mV swing around V_{TT}
SSTL18 _VREF Power Plane (0.9V)	1	0.9	3000	2.7	-0.9	Fairchild FN6555 Data Sheet
XC5VLX50T-FFG1136: FPGA #1 (DDR400, DDR2)	1	2.5	609	1.5		Xilinx Power Estimator
XC5VLX50T-FFG1136: FPGA #2 (DDR2 DIMM)	1	2.5	218	0.5		Xilinx Power Estimator
XC5VLX50T-FFG1136: FPGA #3 (QDRII and RLDRAM II)	1	2.5	435	1.1		Xilinx Power Estimator
Differential Clock Buffer	2	2.5	115	0.8		ICS853006 Data Sheet
200 MHz Osc	1	2.5	30	0.1		Epson EG2121CA Data Sheet
2.5V Power Plane Capacity	1	2.5	15000	37.5	34.1	TI PTH05010 15A Module Data Sheet
XC5VLX50T-FFG1136: FPGA #1 (DDR400)	1	2.6	950	2.5		Xilinx Power Estimator
SSTL2_FPGA Power Plane (2.6V) Capacity	1	2.6	15000	39.0	36.5	TI PTH05010 15A Module Data Sheet
DDR x16 Memory	2	2.6	210	1.1		Micron DDR Component Data Sheet
SSTL2_Mem Power Plane (2.6V) Capacity	1	2.6	6000	15.6	14.5	TI PTH05010 15A Module Data Sheet
DDR Comp V_{TT} Termination	60	1.2	16	1.2		All signals. ± 608 mV swing around V_{TT}
SSTL2 _VREF Power Plane (1.3V)	1	1.3	3000	3.9	2.7	Fairchild FN6555 Data Sheet
Clock Buffer	1	3.3	23	0.1		ICS8304 Data Sheet

Table 4-3: **ML561 Power Plane Capacities *(Continued)***

Device Description	Quantity	Voltage (V)	Current (mA)	Power (W)	Excess Power (W)	Source
System ACE Controller	1	3.3	200	0.7		DS080, *System ACE CompactFlash Solution*
33 MHz Oscillator	2	3.3	45	0.3		Epson SG-8002CA Data Sheet
3.3V Power Plane Capacity	1	3.3	15000	49.5	47.8	TI PTH05010 15A Module Data Sheet
Total Power Consumed				**53.2**		
12V-to-5V Power Module Capacity	1	5.0	12000	60.0	6.8	TI PTH12010 12A Module Data Sheet

Notes:

1. [S] = 1.8V power for SSTL18 plane.
2. [H] = 1.8V power for HSTL18 plane.

FPGA Internal Power Budget

Table 4-4 summarizes power consumption estimates by each of the three XC5VLX50T-FFG1136 FPGAs on the Virtex-5 FPGA ML561 Development Board. This estimate derives the FPGA utilization information from the respective map report of a fully configured reference design.

Table 4-4: **ML561 FPGA Power Estimate Summary**

FPGA #	FPGA #1		FPGA #2(1)	FPGA #3	
Interface	**DDR400 Comp (DCI)**	**DDR2 Comp (DCI)**	**DDR2 DIMM (DCI)**	**QDRII (DCI)**	**RLDRAM II (DCI)**
I/O Standard			**SSTL_18**	**HSTL_18**	**HSTL_18**
Total Power (W)	**3.7**	**3.1**	**10.2**	**6.3**	**4.5**
V_{CCINT} (1.0V) mW	763	763	1945	1160	1515
V_{CCAUX} (2.5V) mW	435	544	544	544	544
SSTL_18 V_{CCO} (1.8V) mW		1819	7664		
SSTL_2 V_{CCO} (2.6V) mW	2469				
HSTL_18 V_{CCO} (1.8V) mW				4571	2406
I/O Frequency (MHz)	200	400	400	400	400
Fabric Frequency (MHz)	200	200	200	200	200
Number of Slices	1500	1500	5910	2750	1951
Number of Flip-flops	2000	2000	7352	2000	1800
Number of Shift Register LUTs	50	50	143	750	400
Number of Block RAMs	5	5	17	14	21
Number of DCMs	2	2	2	2	2
Inputs	10	10	10	90	13
Outputs	50	50	90	160	52
Bidirectionals	36	40	192	0	36
Ambient Temperature (°C)	25	25	25	25	25
Airflow (LFM)	0	0	250	250	0
Heat Sink (Theta-J)	n/a	n/a	5	5	n/a
Junction Temperature (°C)	67	60	78	58	76

Notes:

1. For DDR2 DIMMs as well as QDRII memory interfaces with DCI, an MD35E-10B heat sink is needed. A heat sink with Theta-J = 5.0 should be okay without airflow. See http://www.alphanovatech.com/c_md35e.html for the heat sink profile. A heat sink with Theta-J = 5.0 might need airflow of 250 LFM.

Chapter 5

Signal Integrity Recommendations

Termination and Transmission Line Summaries

The following are common recommendations for the signal termination scheme to all external memories implemented on the Virtex-5 FPGA ML561 Development Board:

- **Single-ended signals**: Simulation indicates that for a single-ended signal, there is no significant performance difference for a signal with split termination of 100Ω + 100Ω between V_{DD} and GND versus the V_{TT} termination of 50Ω to the V_{REF} voltage. Because the power consumption for the split termination is considerably higher than the V_{TT} termination for the SSTL2, SSTL18, and HSTL I/O standards, V_{TT} termination is recommended for single-ended signals on the board, such as data, address, and control. For bidirectional single-ended signals (for example, DDR2 DQ), the V_{TT} termination is provided at both ends of the signal at the FPGA as well as at the memory.
- **Differential signals**: For differential pair signals, a 100Ω differential termination is provided between the two legs of the differential pair. This termination is placed closest to the load. For bidirectional differential signals (for example, DDR2 DQS), the differential SelectIO™ primitives in Virtex-5 FPGAs (for example, DIFF_SSTL_II_18_DCI), account for the differential termination within the IOB. So external differential termination is required only at the memory.
- **Multiload signals**: Address and control signals are driven by the FPGA, and they have multiple loads. The termination is placed at the end of the trace after the last load.

Table 5-1 through Table 5-5 summarize the specific termination schemes used on the Virtex-5 FPGA ML561 Development Board for the following five different memory interfaces. For each signal category, these tables include reference to the preliminary IBIS simulation results(1).

1. DDR400 SDRAM Components (Table 5-1)
2. DDR2 SDRAM DIMM (Table 5-2)
3. DDR2 SDRAM Components (Table 5-3)
4. QDRII SRAM (Table 5-4)
5. RLDRAM II (Table 5-5)

1. Virtex-4 device IBIS models were used during the development of the ML561 board to understand the expected signal integrity of the memory interface signals. When the Virtex-5 device IBIS models are available, the results of post-layout IBIS simulations and characterization results will be reported.

Table 5-1: **DDR400 SDRAM Component Terminations**

Signal	FPGA Driver	Termination at FPGA	Termination at Memory
Data (DQ)	SSTL2_II_DCI	No termination	50Ω pull-up to 1.3V
Data Strobe (DQS)	SSTL2_II_DCI	No termination	50Ω pull-up to 1.3V
Clock (CK, $\overline{CK}$)	SSTL2_II	No termination	100Ω differential termination between pair
Address (A, BA)	SSTL2_II	No termination	50Ω pull-up to 1.3V after the last component
Control ($\overline{RAS}$, $\overline{CAS}$, $\overline{WE}$, $\overline{CS}$, DM, and CKE)	SSTL2_II	No termination	50Ω pull-up to 1.3V after the last component

Table 5-2: **DDR2 SDRAM DIMM Terminations**

Signal	FPGA Driver	Termination at FPGA	Termination at Memory
Data (DQ)	SSTL18_II_DCI	No termination	No termination (use 75Ω ODT(1))
Data Strobe (DQS, $\overline{DQS}$)	DIFF_SSTL18_II_DCI	No termination	No termination (use 75Ω ODT)
Data Mask (DM)	SSTL18_II	No termination	No termination (use 75Ω ODT)
6 Pairs of Clocks (CK, $\overline{CK}$), 3 each per DIMM	SSTL18_II	No termination	No termination(2)
Address (A, BA)	SSTL18_II	No termination	50Ω pull-up to 0.9V after the second DIMM
Control ($\overline{RAS}$, $\overline{CAS}$, $\overline{WE}$, $\overline{CS}$, CKE, and others)	SSTL18_II	No termination	50Ω pull-up to 0.9V after the second DIMM

Notes:

1. Due to use of DCI I/O for DQ and DQS, these signals have parallel termination at the source during Write operations. Simulation results show that use of a weaker 75Ω ODT instead of a matching 50Ω ODT setting gives better noise margin at the memory.
2. The DIMM already contains 120Ω differential termination. A 5 pF capacitive termination is provided on the board as per Micron TN-47-01.

Table 5-3: **DDR2 SDRAM Component Terminations**

Signal	FPGA Driver	Termination at FPGA	Termination at Memory
Data (DQ)	SSTL18_II_DCI	No termination	No termination (use 75Ω ODT)
Data Strobe (DQS, $\overline{DQS}$)	DIFF_SSTL18_II_DCI	No termination	No termination (use 75Ω ODT)
Data Mask (DM)	SSTL18_II	No termination	No termination (use 75Ω ODT)
Clock (CK, $\overline{CK}$)	SSTL18_II	No termination	100Ω differential termination between pair
Address (A, BA)	SSTL18_II	No termination	50Ω pull-up to 0.9V after the last component
Control ($\overline{RAS}$, $\overline{CAS}$, $\overline{WE}$, $\overline{CS}$, and CKE)	SSTL18_II	No termination	50Ω pull-up to 0.9V after the last component

Table 5-4: **QDRII SRAM Terminations**

Signal	FPGA Driver	Termination at FPGA	Termination at Memory
Write Data (D)	HSTL_I_18	No termination	50Ω pull-up to 0.9V
Read Data (Q)	HSTL_I_DCI_18	No termination	No termination
Write Strobe (K, $\overline{K}$)	HSTL_I_18	No termination	50Ω pull-up to 0.9V
Read Strobe (CQ, $\overline{CQ}$)	HSTL_I_DCI_18	No termination	No termination
Clock (CK, $\overline{CK}$)	HSTL_I_18	No termination	100Ω differential termination between pair
Address (A, BA)	HSTL_I_18	No termination	50Ω pull-up to 0.9V after the last component
Control ($\overline{RAS}$, $\overline{CAS}$, $\overline{WE}$, $\overline{CS}$, CKE, and BW)	HSTL_I_18	No termination	50Ω pull-up to 0.9V after the last component

Table 5-5: **RLDRAM II Terminations**

Signal	FPGA Driver	Termination at FPGA	Termination at Memory
Data (DQ for CIO)	HSTL_II_DCI_18	No termination	50Ω pull-up to 0.9V
Data (Q for SIO)	HSTL_I_DCI_18	No termination	No termination
Write Data (D for SIO)	HSTL_I_18	No termination	50Ω pull-up to 0.9V
Write Strobe (DK, $\overline{DK}$)	DIFF_HSTL_I_18	No termination	100Ω differential termination between pair
Read Strobe (QK, $\overline{QK}$)	DIFF_HSTL_II_DCI_18 (for CIO) DIFF_HSTL_I_DCI_18 (for SIO)	No termination	No termination
Data Valid (QVLD)	HSTL_II_DCI_18 (for CIO) HSTL_I_DCI_18 (for SIO)	No termination	No termination
Clock (CK, $\overline{CK}$)	DIFF_HSTL_I_18	No termination	100Ω differential termination between pair
Address (A, BA)	HSTL_I_18	No termination	50Ω pull-up to 0.9V after the last component
Control ($\overline{RAS}$, $\overline{CAS}$, $\overline{WE}$, $\overline{CS}$, and CKE)	HSTL_I_18	No termination	50Ω pull-up to 0.9V after the last component

Chapter 6

Configuration

This chapter provides a brief description of the FPGA configuration methods used on the Virtex-5 FPGA ML561 Development Board. This chapter contains the following sections:

- "Configuration Modes"
- "JTAG Chain"
- "JTAG Port"
- "Parallel IV Cable Port"
- "System ACE Interface"

Configuration Modes

The Virtex-5 FPGA ML561 Memory Interfaces Development Board includes several options to configure the Virtex-5 FPGAs. The configuration modes are:

- System ACE mode
- JTAG mode

Table 6-1 shows the Virtex-5 FPGA configuration modes. The Master and Slave (Parallel) SelectMAP configuration modes are not supported on the Virtex-5 FPGA ML561 Development Board. A separate 6-pin 3x2 header is provide for each FPGA to control the Mode bits setting. The three headers are P27, P46, and P112 for FPGA #1, FPGA #2, and FPGA #3, respectively. The even pins (# 2, 4, and 6) of the headers are tied to GND, and the odd pins (# 1, 3, and 5) are connected to the respective Mode bit FPGA inputs (M0, M1, and M2, respectively). A weak (4.7KΩ) pull-up is applied to each of these pins to set a logic '1' by default.

Table 6-1: **Configuration Modes**

Mode	XCONFIG P72	JTAG P114	Mode Jumpers(3,4)		
			5 -> 6 (M2)	3 -> 4 (M1)	1 -> 2 (M0)
Master Serial	X(1)	—(2)	0	0	0
Slave Serial	X	—	1	1	1
Master SelectMAP	—	—	0	1	1
Slave SelectMAP	—	—	1	1	0
JTAG	—	X	1	0	1

Table 6-1: **Configuration Modes *(Continued)***

Mode	XCONFIG P72	JTAG P114	Mode Jumpers(3,4)		
			5 -> 6 (M2)	3 -> 4 (M1)	1 -> 2 (M0)
System ACE CF Card	—	—	1	1	1

Notes:

1. X = Supported.
2. — = Not applicable.
3. Corresponding jumper position is Closed.
4. Corresponding jumper position is Open.

JTAG Chain

Four devices (the System ACE chip and three XC5VLX50T-FFG1136 FPGAs) are connected via a JTAG chain on the Virtex-5 FPGA ML561 Development Board. The order of the four devices in the JTAG chain is System ACE chip (U45), FPGA #1 (U7), FPGA #2 (U5), and FPGA #3 (U34). The DONE pin of the FPGAs in the chain are tied together to a single LED (D28). Each FPGA in the JTAG chain must be programmed for the board to be configured properly. To program FPGAs in the JTAG chain that do not need functionality, a blank design with no logic implementation can be used to compile to generate the corresponding configuration bitstream.

Three different sources can be used to drive this JTAG chain:

- JTAG Port
- Xilinx Parallel IV Cable
- System ACE Controller

JTAG Port

The Virtex-5 FPGA ML561 Development Board provides a JTAG connector (P114) that can be used to program the Virtex-5 FPGAs, and program and/or configure other JTAG devices in the chain.

Parallel IV Cable Port

The Virtex-5 FPGA ML561 Development Board provides a Parallel IV Cable connector (P64) to configure the Virtex-5 FPGAs and program JTAG devices located in the JTAG chain.

System ACE Interface

The Virtex-5 FPGA ML561 Development Board provides a System ACE interface to configure the Virtex-5 FPGA. The interface also gives software designers the ability to run code (for soft processor IP within the FPGA) from removable CompactFlash cards.

Refer to the DS080, *System ACE CompactFlash Solution* for detailed information on creating System ACE compatible ACE files, formatting the CompactFlash card, and storing multiple design images.

Table 6-2 shows the System ACE interface signal names, descriptions, and pin assignments.

Table 6-2: **System ACE Interface Signal Descriptions**

System ACE Pin Number	Signal Name
70	SYSACE_MPA0
69	SYSACE_MPA1
68	SYSACE_MPA2
67	SYSACE_MPA3
45	SYSACE_MPA4
44	SYSACE_MPA5
43	SYSACE_MPA6
66	SYSACE_MPD0
65	SYSACE_MPD1
63	SYSACE_MPD2
62	SYSACE_MPD3
61	SYSACE_MPD4
60	SYSACE_MPD5
59	SYSACE_MPD6
58	SYSACE_MPD7
77	SYSACE_CTRL0/MPOE
76	SYSACE_CTRL1/MPWE
42	SYSACE_CTRL2/MPCE
41	SYSACE_CTRL3/MPIRQ
39	SYSACE_CTRL4/MPBRDY
93	SYSACE_CLK

XILINX®

Chapter 7

ML561 Hardware-Simulation Correlation

This chapter contains the following sections:

- "Introduction"
- "Test Setup"
- "Signal Integrity Correlation Results"
- "Summary and Recommendations"
- "How to Generate a User-Specific FPGA IBIS Model"

Introduction

Signal integrity (SI) simulation is a very powerful tool that predicts the quality of signal at the receiver. The quality of signal at the I/O buffer of the receiver device is most important to the system designer. The observation point is buried within the IC device and is not accessible for attaching a physical probe. *This signal can only be simulated*. It cannot be measured on the hardware with an oscilloscope.

Signals can only be measured on hardware at the via probe points of a printed circuit board (PCB) near the receiver device. For a high level of confidence in the SI simulation results, it is necessary to develop and validate the simulation model to get a good correlation with the hardware measurements at the probe points. When the correlation is obtained, the same simulation model is used to extrapolate and accurately predict the signal quality at the I/O buffer of the receiver device for the two significant corner driver conditions: *slow-weak* and *fast-strong*.

The Virtex-5 FPGA ML561 Development Board implements five different memory interfaces:

- 32-bit DDR2 component
- 144-bit DDR2 DIMM
- 72-bit QDRII SRAM
- 32-bit DDR component
- 36-bit RLDRAM II

Each of these interfaces consists address, control, clock, data, and strobe signals. The ML561 board has over 500 unique signals.

DDR2 SDRAMs and QDRII SRAM represent the large majority of Virtex-5 FPGA memory applications. The dual data rate (DDR) data bits are the most critical signals to analyze. This chapter presents SI analysis for only six representative data bit signals. The procedure

illustrated here for these signals can be easily adopted to perform SI analysis for any other memory interface signal on the ML561 board.

This chapter presents the SI results for the following six data bit signals:

- DDR2 component DQ bit (DDR2_DQ_BY2_B3) for write operations
- DDR2 component DQ bit (DDR2_DQ_BY2_B3) for read operations
- DDR2 DIMM DQ bit (DDR2_DIMM_DQ_BY2_B3) for write operations
- DDR2 DIMM DQ bit (DDR2_DIMM_DQ_BY2_B3) for read operations
- QDRII D bit (QDR2_D_BY0_B5) for write operations
- QDRII Q bit (QDR2_Q_BY0_B5) for read operations

Test Setup

Hardware measurements were performed for the six specific signal nets, and then signal integrity (SI) simulations were performed for correlation and extrapolation. The test setup consisted of the following hardware equipment, simulation software tools, the stimulus test pattern, and test criteria for determining the quality of signals. The test bench is designed so that the test pattern is applied only to the signal under test, and all other data bits to the same memory interface are kept in a quiet Low state. This setup ensures that the hardware measurement is not altered due to any simultaneous switching output (SSO) effect.

- Hardware measurement equipment
  - Agilent DSO80604B 6 GHz oscilloscope
  - Agilent 1131A 3.5 GHz Infiniimax probe amplifier
  - Agilent E2675A (Differential browser) or E2677A (Differential solder-in probe) or N5425A (ZIF probe)
  - Virtex-5 FPGA ML561, Rev B2 board: S/N 103
  - SRS Model CG635 Synthesized Clock Generator for low jitter clock source
- Simulation software
  - Mentor Graphics HyperLynx EXT, Version 7.5 with LineSim and BoardSim features
  - Xilinx Virtex-5 FPGA IBIS package file: `ff1136_5vlx50t.pkg`, Rev 1.0 dated June 12, 2006
  - ML561, Rev B layout file: `ML561_B_041706.hyp`
  - Micron DDR2-667 IBIS model for output and ODT input
  - Micron PC2-5300 RDIMM IBIS model
  - Molex DDR2 DIMM socket specification (P/N 087705-1041)
  - Samsung QDRII HSTL 1.8V IBIS model
  - IBISWriter Utility of ISE software suite to create customized IBIS model of the FPGA1 (U7) and FPGA3 (U34) devices on the ML561 board: Model files `ml561_fpga1_u7.ibs` and `ml561_fpga3_u34.ibs`. (See "How to Generate a User-Specific FPGA IBIS Model," page 93 for steps on how to create a customized IBIS model of Virtex-5 FPGA for your design.)
- Stimulus

  Pseudo Random Bit Stream (PRBS) is accepted as the most effective test pattern to measure the quality of data signals because, unlike the periodic signals like clock and

strobe, a random value can be applied to data bits from one cycle to another. A 63-bit PRBS6[1] (PRBS of order 6) test pattern stimulus is used for this analysis. The value of this PRBS6 string is `63'h03F5_66ED_2717_9461`, that is:
`63'b000001111110101011001101110110100100111000101111001010001100001`.

The HyperLynx stimulus setup is for: a 2-sequence repeat, 10 bits skipped, 1 eye, and 0% jitter.

- Test criteria

  Quality of a signal is measured in terms of the opening of the signal eye at the receiver input for both the amplitude and the width. DDR2 SDRAM (Component and DIMM) interfaces utilize the SSTL_18 I/O standard, and the QDRII SRAM interface utilizes the HSTL 1.8V I/O standard. For each of these two I/O standards, the eye mask is defined by the trapezoid enclosed by the following four voltage thresholds at the receiver input:

  - VIH(ac)-min at the rising edge
  - VIH(dc)-min at the falling edge
  - VIL(dc)-max at the rising edge
  - VIL(ac)-max at the falling edge

  Refer to Figure 7-1 for the definition of voltage levels with regard to the trapezoidal eye mask. Refer to "Terminology," page 9 for definitions of the voltage thresholds. Because the HyperLynx SI simulation software does not support a trapezoidal mask definition, two separate triangular masks for VIH and VIL are defined, as shown in Figure 7-2, such that the third vertex of triangle falls on the VREF axis.

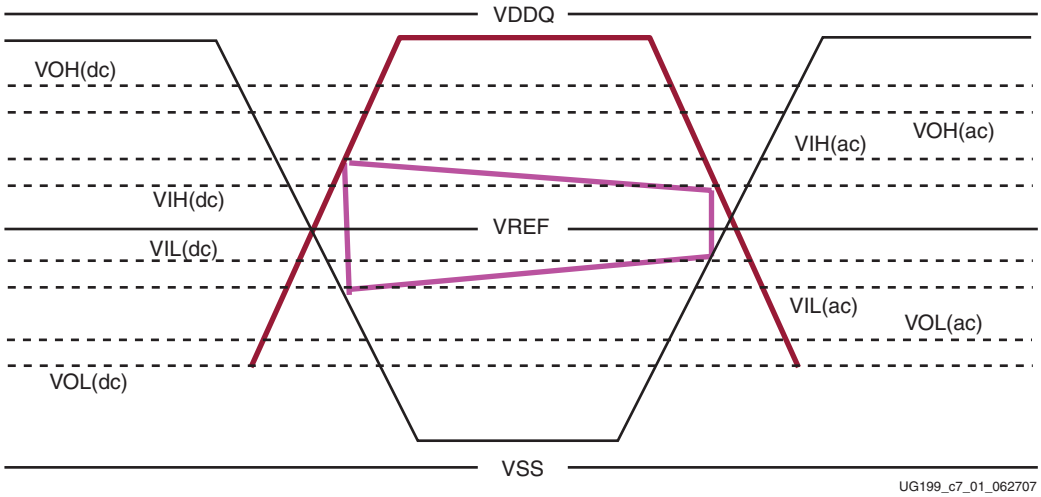

Figure 7-1: **Single Trapezoid Eye Mask Definition**

1. A maximal-length PRBS test sequence of order *n* generates all ($2^n - 1$), n-bit combinations of test sequences (except all 0s). Thus the test sequence contains one n-bit long consecutive string of 1s and two (n-1)-bit long consecutive strings of 0s. With the PRBS6 test pattern, at the highest test frequency of 333 MHz (that is, the bit time is 1.5 ns), measurements in this setup result in a maximum settling time of (1.5 ns * 5) = 7.5 ns for a logic Low, and a maximum settling time of (1.5 ns * 6) = 9 ns for a logic High. 7.5 ns is sufficient time for the test signal to reach a steady state before the next transition. Thus a PRBS test pattern of higher order, such as 7 or 9, does not change the eye pattern, as proven by sample simulation of one test signal with PRBS6, PRBS7, and PRBS9 stimuli.

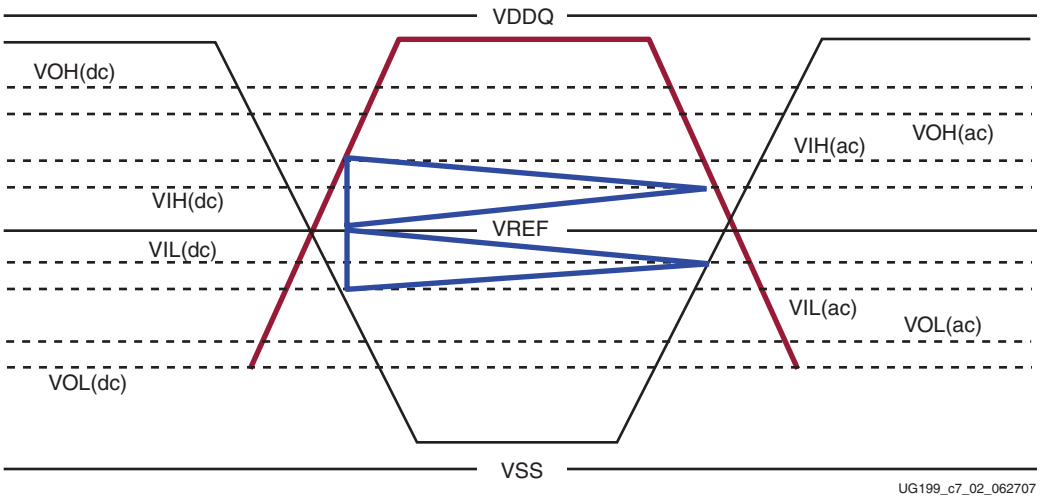

Figure 7-2: **Two Triangular Eye Mask Definitions for VIH and VIL**

- DDR2 mask (for nominal VDDQ = 1.8V and VREF = 0.9V):
  - VIH(ac)-min = VREF + 200 mV = 1.1V
  - VIH(dc)-min = VREF + 125 mV = 1.025V
  - VIL(ac)-max = VREF – 200 mV = 0.7V
  - VIL(dc)-max = VREF – 125 mV = 0.775V
- QDRII mask (for nominal values of VDDQ = 1.8V and VREF = 0.9V):
  - VIH(ac)-min = VREF + 200 mV = 1.1V
  - VIH(dc)-min = VREF + 100 mV = 1.0V
  - VIL(ac)-max = VREF – 200 mV = 0.7V
  - VIL(dc)-max = VREF – 100 mV = 0.8V

Signal Integrity Correlation Results

This section presents SI results for each of the six chosen memory signals on the ML561 board. The following information is presented for each memory signal:

- A post-layout IBIS schematics of the signal under test
- A description of the major circuit elements(1) of this signal
- A summary of four SI results: hardware measurement, correlation simulation, slow-weak corner driver simulation extrapolation, and fast-strong corner driver simulation extrapolation
- A set of eight figures showing eye and waveform scope shots for each of the four SI results mentioned in the bulleted list in the previous section

For an explanation of the different terms used to present these results, refer to "Terminology," page 9 for some definitions and routing terminologies.

1. With regard to transmission line impedance, Table 3-19 in the "Board Design Considerations" section lists controlled impedance values of all routing layers. The design goal for the ML561 board is to keep the characteristic impedance for all routing layers as close to 50Ω as possible. Manufacturing tolerance is usually ±10%. The characteristic impedance of DIMM PCB is derived from the Micron DIMM layout file.

DDR2 Component Write Operation

This subsection shows the test results for the DDR2_DQ_BY2_B3 signal from FPGA1 (U7) to the DDR2 memory component (U12) measured at 333 MHz (667 Mb/s), where the unit interval (UI) = 1.5 ns.

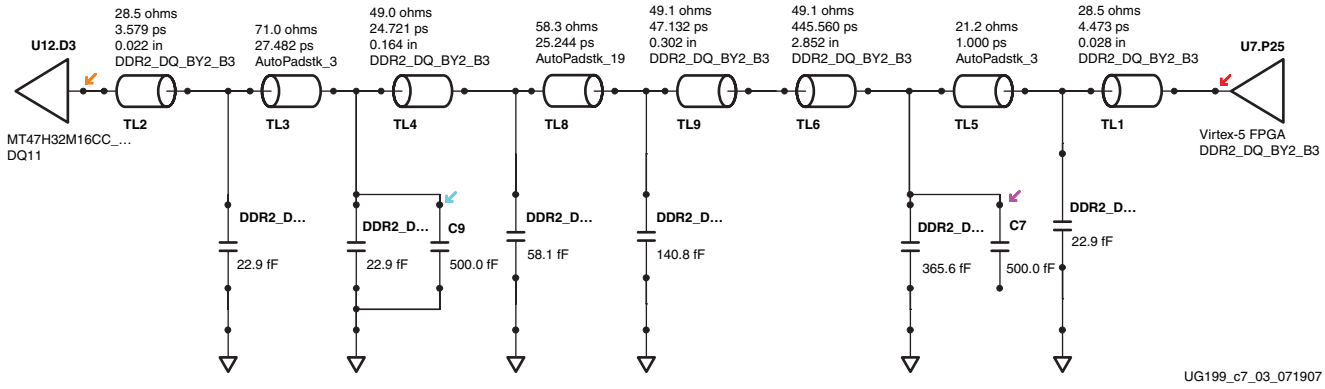

Figure 7-3: **Post-Layout IBIS Schematics of DDR2 Component Write Data Bit (DDR2_DQ_BY2_B3)**

Table 7-1: **Circuit Elements of DDR2 Component Write Data Bit (DDR2_DQ_BY2_B3)**

Element	Designation	Description
Driver	U7.P25	FPGA SSTL18_II_DCI_O
Receiver	U12.D3	DDR2 Memory, 75 Ω ODT
Probe Point	C9	Via under the memory device
PCB Termination	None	ODT75 at load
Trace Length	TL 2, 4, 9, 6, 1	3.37 inches

Table 7-2: **DDR2 Component Write Operation Correlation Results**

Measurement	DVW(1) (%UI)	ISI (% UI)	Noise Margin (VIH, + VIL) = Total (% of VREF)	Overshoot / Undershoot Margin (% of VREF)
Hardware at probe point	1.18 ns (78.7%)	(80 + 80) = 160 ps (10.7%)	(274 + 384) = 658 mV (73.1%)	(550 + 470) = 1020 mV (113.3%)
Simulation correlation slow-weak corner	1.22 ns (81.3%)	(77 + 36) = 113 ps (7.5%)	(294 + 266) = 560 mV (62.2%)	(461 + 490) = 951 mV (105.7%)
Correlation Delta: HW vs. Simulation	40 ps (2.6%)	47 ps (3.2%)	98 mV (10.9%)	69 mV (7.6%)
Extrapolation at IOB slow-weak corner	1.27 ns (84%)	(91 + 36) = 127 ps (8.5%)	(300 + 270) = 570 mV (63.3%)	(469 + 501) = 970 mV (107.8%)
Extrapolation at IOB fast-strong corner	1.39 ns (92%)	(34 + 20) = 54 ps (3.7%)	(406 + 351) = 757 mV (84.1%)	(304 + 381) = 685 mV (76.1%)

Notes:

1. DVW = Data Valid Window, ISI = Inter-Symbol Interference

DDR2 DQ is a bidirectional signal. To perform hardware measurements for a Write operation that is not interrupted by a Read response or a Refresh operation, the testbench on FPGA1 is controlled by DIP switches (SW2) as indicated in Table 7-3.

Table 7-3: **DIP[1:2] Settings**

Setting	Description
`2'b00` or `2'b11`	Normal alternating Write/Read sequence
`2'b01`	Write only, Refresh disabled
`2'b10`	Write once, then Read only, Refresh disabled



Figure 7-4: **DDR2 Component Write HW Measurement - Eye Scope Shot at Probe Point (DDR2 Memory Via)**

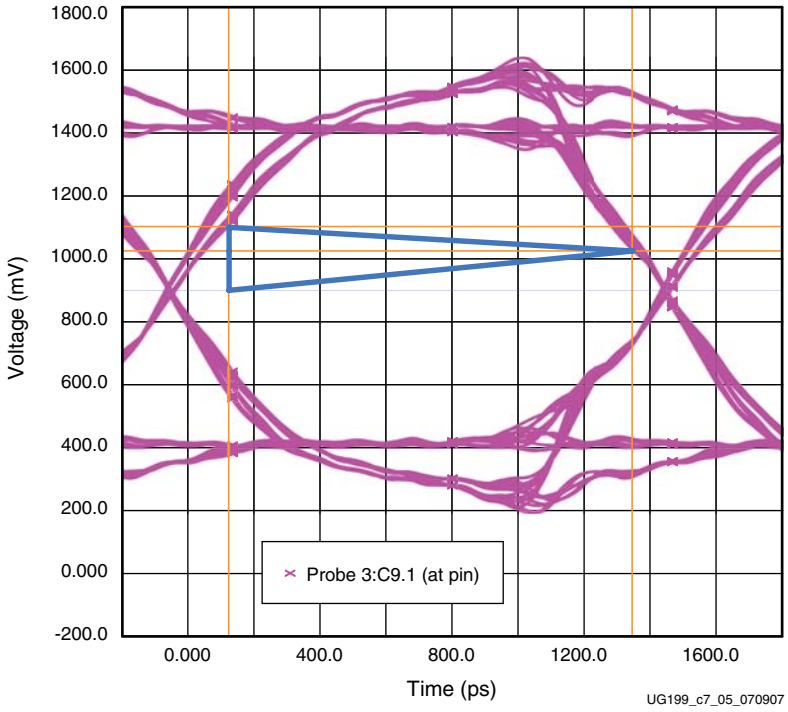

- 333 MHz, Slow, PRBS6, 81.5% UI
- Cursor 1: 1.1028V, 123.6 ps
- Cursor 2: 1.0253V, 1.3458 ns
- Delta Voltage = 77.5 mV, Delta Time = 1.2222 ns (81.5% UI)

Figure 7-5: **DDR2 Component Write Correlation - Eye Scope Shot at Probe Point (Slow Corner)**

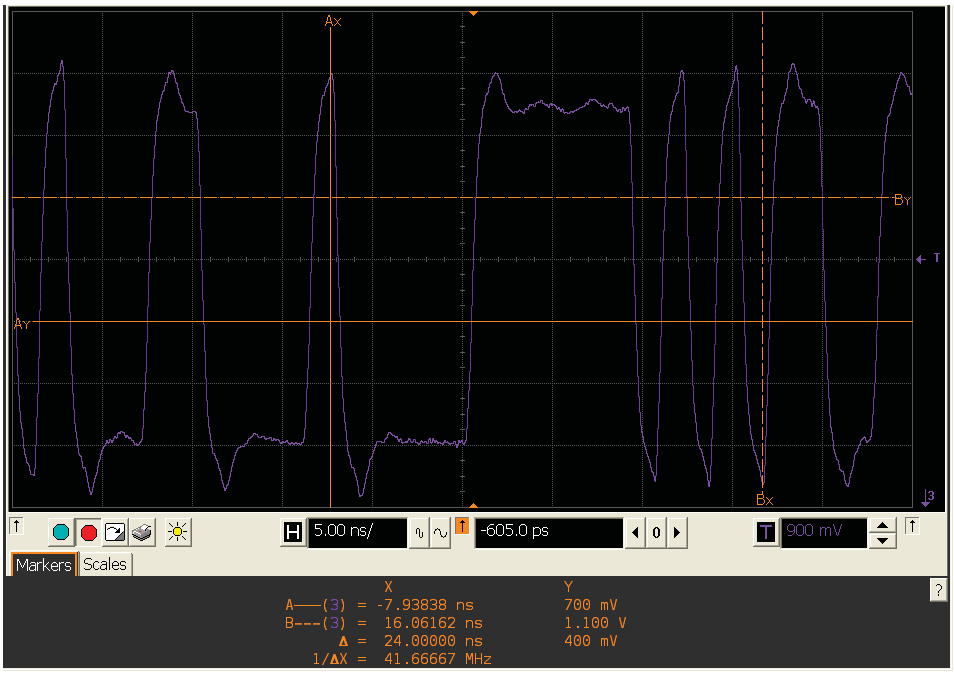

Figure 7-6: **DDR2 Component Write HW Measurement - Waveform Scope Shot at Probe Point (DDR2 Memory Via)**

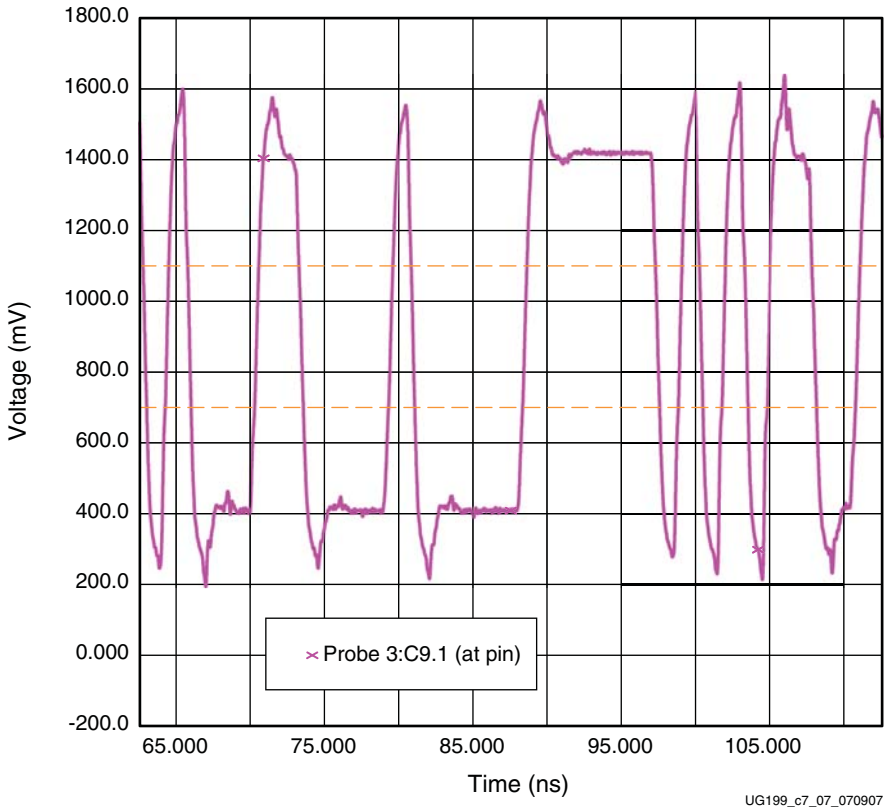

Figure 7-7: **DDR2 Component Write Correlation - Waveform Scope Shot at Probe Point (Slow Corner)**

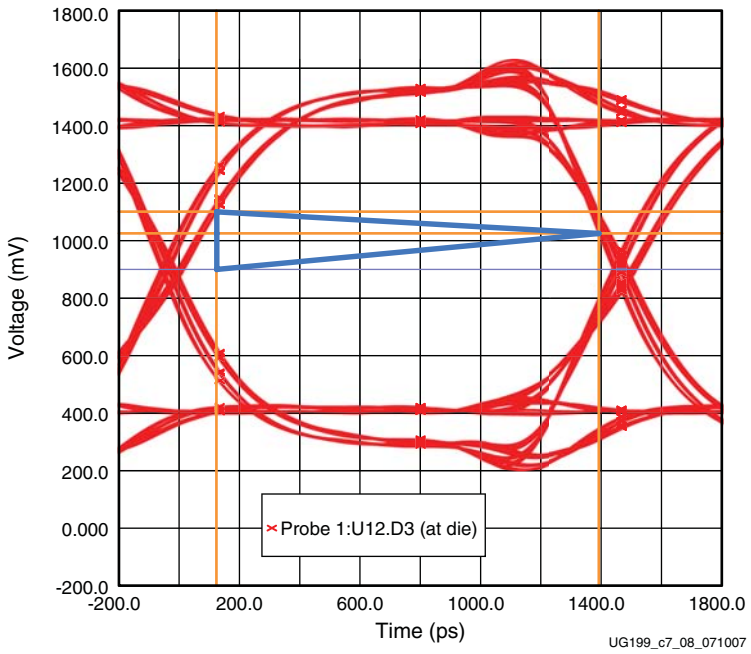

- 333 MHz, Slow, PRBS6, 84.5% UI
- Cursor 1: 1.1007V, 123.7 ps
- Cursor 2: 1.0253V, 1.3921 ns
- Delta Voltage = 75.4 mV, Delta Time = 1.2684 ns (84.5% UI)

Figure 7-8: **DDR2 Component Write Extrapolation - Eye Scope Shot at Receiver IOB (Slow Corner)**

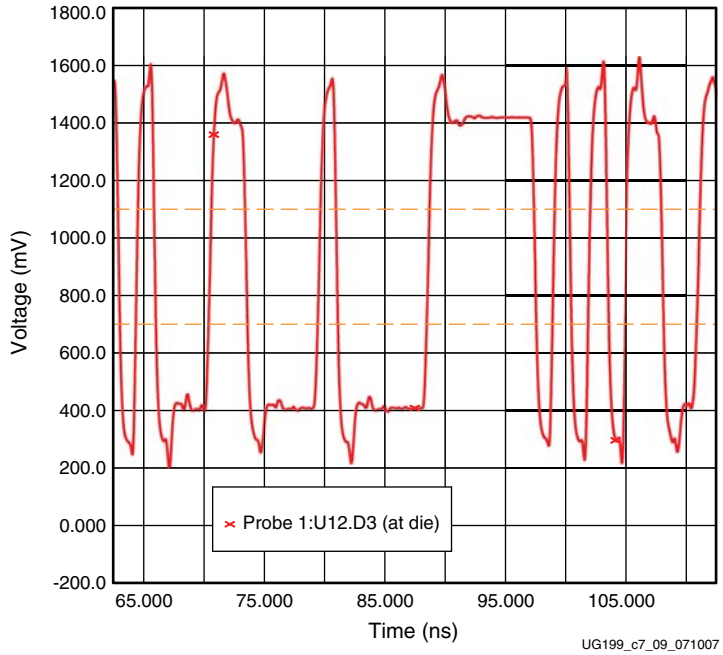

Figure 7-9: **DDR2 Component Write Extrapolation - Waveform Scope Shot at Receiver IOB (Slow Corner)**

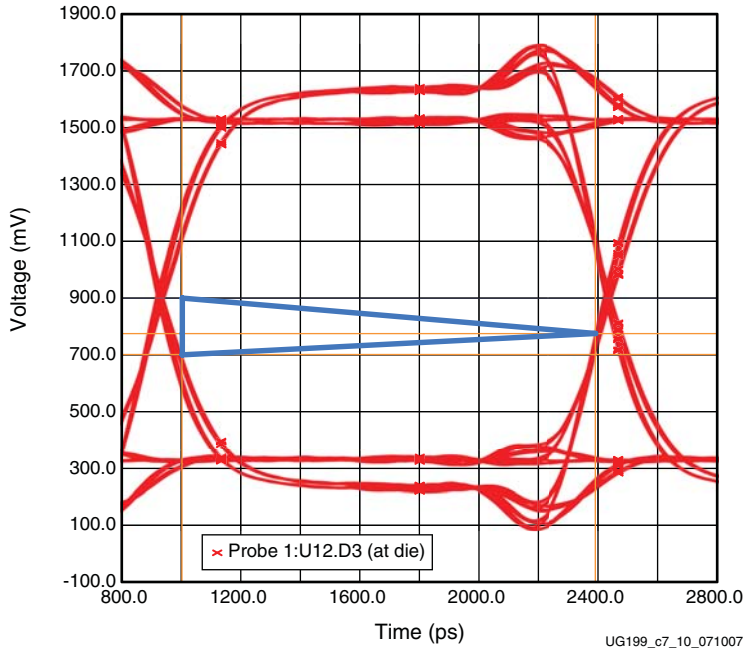

- 333 MHz, Fast, PRBS6, 92.5% UI
- Cursor 1: 701.2 mV, 1.0026 ns
- Cursor 2: 774.6 mV, 2.3908 ns
- Delta Voltage = 73.4 mV, Delta Time = 1.3883 ns (92.5% UI)

Figure 7-10: **DDR2 Component Write Extrapolation - Eye Scope Shot at Receiver IOB (Fast Corner)**

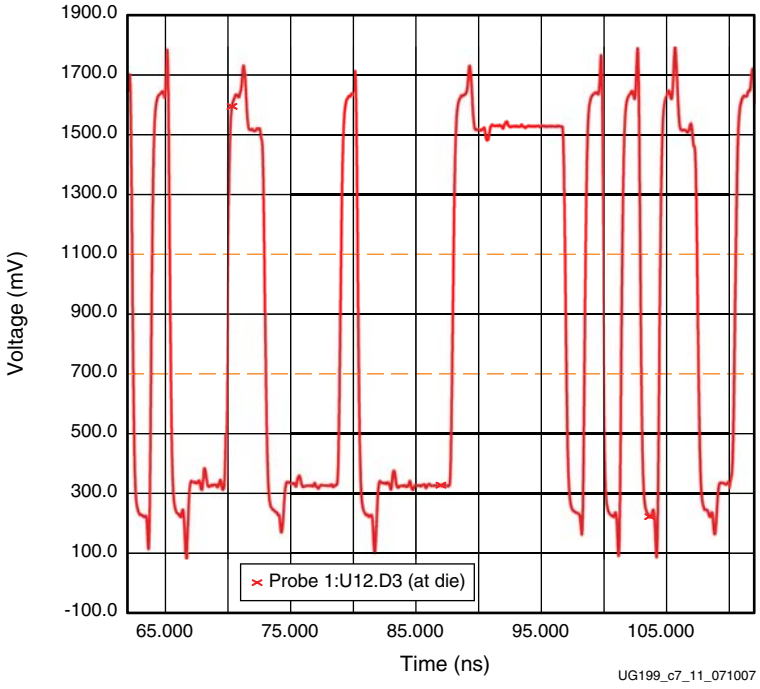

Figure 7-11: **DDR2 Component Write Extrapolation - Waveform Scope Shot at Receiver IOB (Fast Corner)**

DDR2 Component Read Operation

This subsection shows the test results for the DDR2_DQ_BY2_B3 signal from the DDR2 memory component (U12) to FPGA1 (U7) measured at 333 MHz (667 Mb/s), where the unit interval (UI) = 1.5 ns.

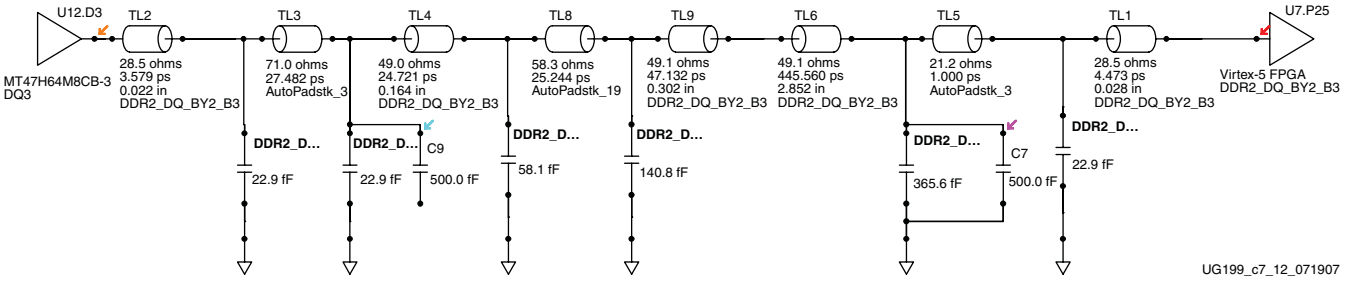

Figure 7-12: **Post-Layout IBIS Schematics of the DDR2 Component Read Data Bit (DDR2_DQ_BY2_B3)**

Table 7-4: **Circuit Elements of DDR2 Component Read Data Bit (DDR2_DQ_BY2_B3)**

Element	Designation	Description
Driver	U12.D3	DDR2 Memory
Receiver	U7.P25	FPGA SSTL18_II_DCI_I
Probe Point	C7	Via under FPGA1
PCB Termination	None	DCI at receiver
Trace Length	TL 2, 4, 9, 6, 1	3.37 inches

Table 7-5: **DDR2 Component Read Operation Correlation Results**

Measurement	DVW (% UI)	ISI (% UI)	Noise Margin (VIH + VIL) = Total (% of VREF)	Overshoot / Undershoot Margin (% of VREF)
Hardware at probe point	1.28 ns (85%)	(70 + 110) = 180 ps (12%)	(423 + 416) = 839 mV (83.1%)	(400 +400) = 800 mV (79.1%)
Simulation correlation slow-weak corner	1.28 ns (85%)	(132 + 91) = 223 ps (14.9%)	(406 +439) = 845 mV (83.8%)	(279 +277) = 556 mV (61.9%)
Correlation Delta: HW vs. Simulation	0 ps (0.0%)	43 ps (2.9%)	6 mV (0.7%)	244 mV (17.2%)
Extrapolation at IOB slow-weak corner	1.29 ns (86%)	(96 + 82) = 178 ps (11.9%)	(418 + 449) = 867 mV (96.3%)	(304 +265) = 569 mV (63.1%)
Extrapolation at IOB fast-strong corner	1.32 ns (88%)	(29 + 67) = 96 ps (6.7%)	(455 +435) = 890 mV (98.9%)	(167 +182) = 349 mV (38.9%)

To perform hardware measurements for a Read operation that is not interrupted by a Write or a Refresh operation, the testbench on FPGA1 is controlled by the following DIP switch (SW2) setting:

- DIP[1:2] = `2'b10` – Write once, then Read only, Refresh disabled



Figure 7-13: **DDR2 Component Read HW Measurement - Eye Scope Shot at Probe Point (FPGA1 Via)**

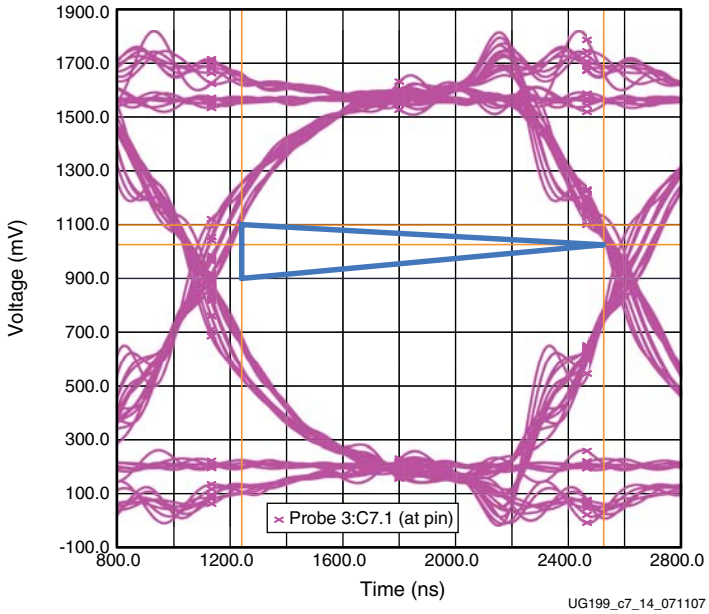

- 333 MHz, Slow, PRBS6, 85.9% UI
- Cursor 1: 697.1 mV, 1.2345 ns
- Cursor 2: 774.6 mV, 2.5191 ns
- Delta Voltage = 77.5 mV, Delta Time = 1.2846 ns (85.9% UI)

Figure 7-14: **DDR2 Component Read Correlation - Eye Scope Shot at Probe Point (Slow Corner)**

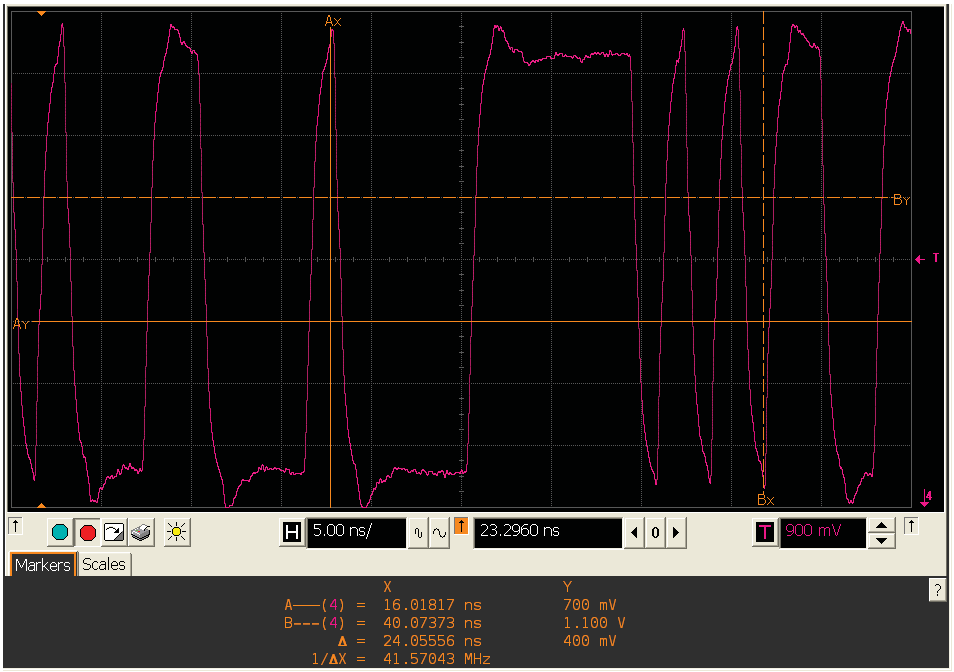

Figure 7-15: **DDR2 Component Read HW Measurement - Waveform Scope Shot at Probe Point (FPGA1 Via)**

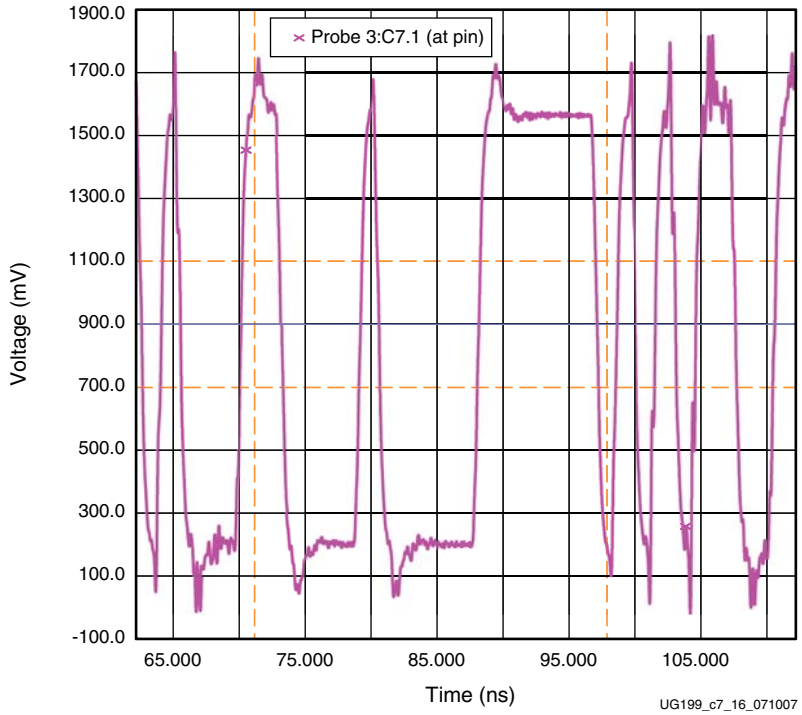

Figure 7-16: **DDR2 Component Read Correlation - Waveform Scope Shot at Probe Point (Slow Corner)**

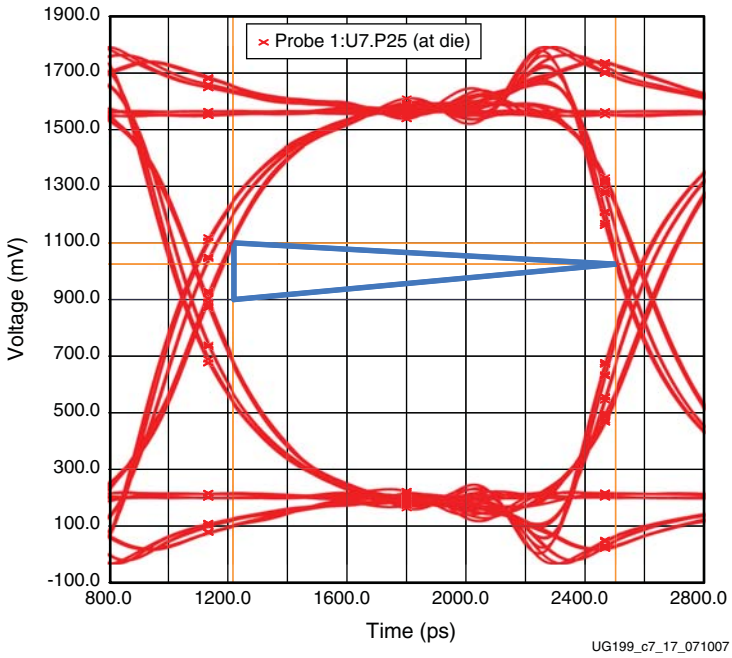

- 333 MHz, Slow, PRBS6, 85.5% UI
- Cursor 1: 1.0988V, 1.2170 ns
- Cursor 2: 1.0254V, 2.5029 ns
- Delta Voltage = 73.4 mV, Delta Time = 1.2859 ns (85.5% UI)

Figure 7-17: **DDR2 Component Read Extrapolation - Eye Scope Shot at Receiver IOB (Slow Corner)**

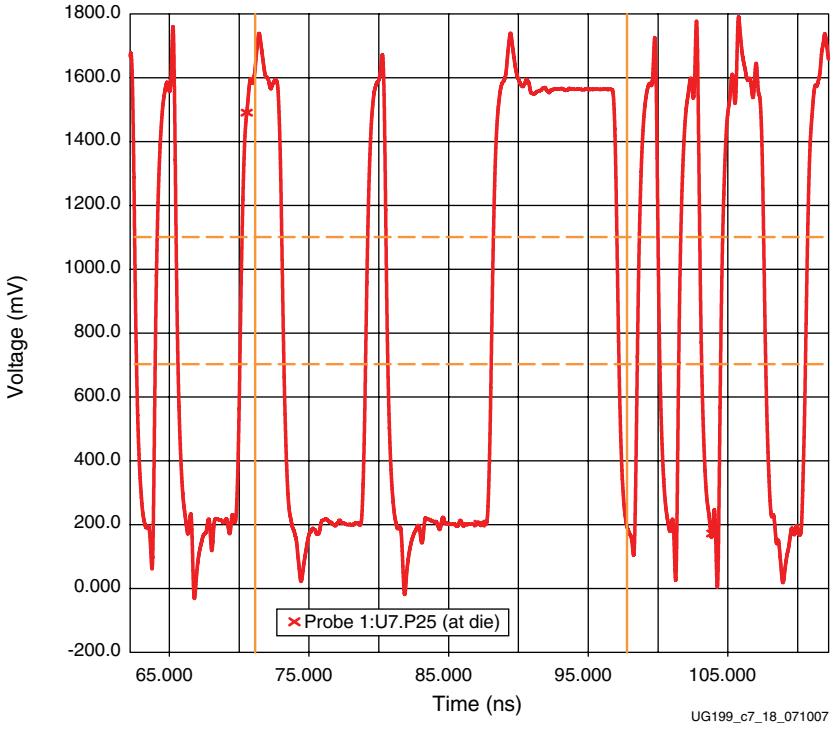

Figure 7-18: **DDR2 Component Read Extrapolation - Waveform Scope Shot at Receiver IOB (Slow Corner)**

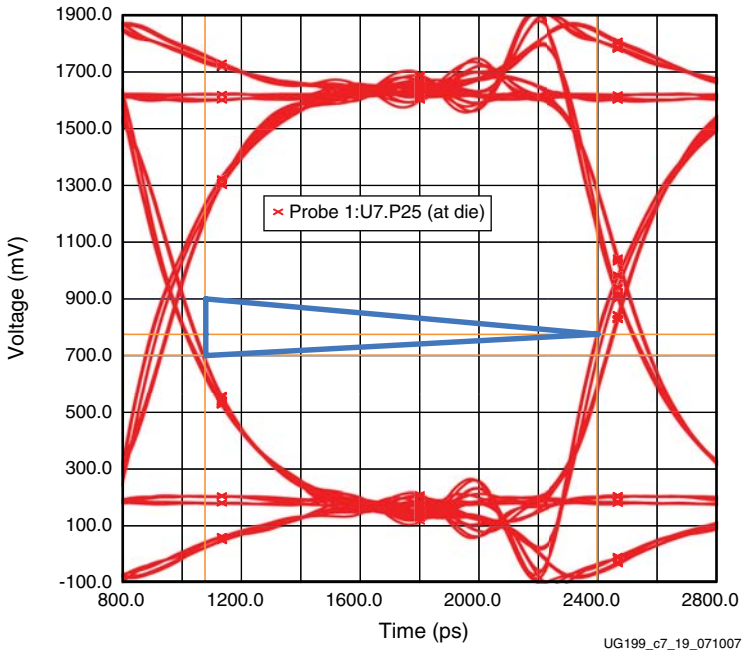

- 333 MHz, Fast, PRBS6, 88% UI
- Cursor 1: 701.2 mV, 1.0772 ns
- Cursor 2: 774.6 mV, 2.3980 ns
- Delta Voltage = 73.4 mV, Delta Time = 1.3208 ns (88% UI)

Figure 7-19: **DDR2 Component Read Extrapolation - Eye Scope Shot at Receiver IOB (Fast Corner)**

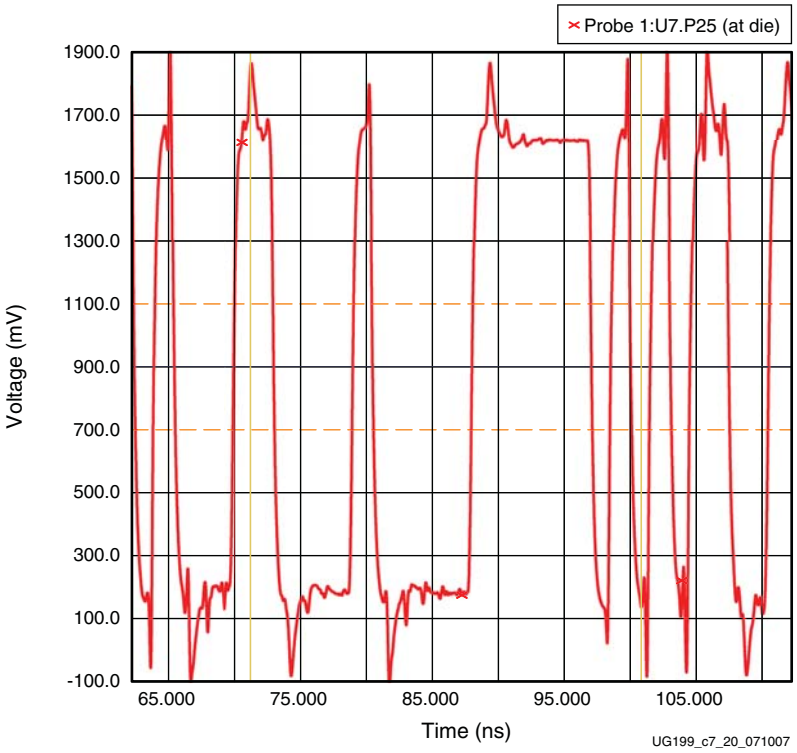

Figure 7-20: **DDR2 Component Read Extrapolation - Waveform Scope Shot at Receiver IOB (Fast Corner)**

DDR2 DIMM Write Operation

This subsection shows the test results for the DDR2_DIMM_DQ_BY2_B3 signal from FPGA2 (U5) to the DDR2 DIMM (XP2) measured at 333 MHz (667 Mb/s), where the unit interval (UI) = 1.5 ns.

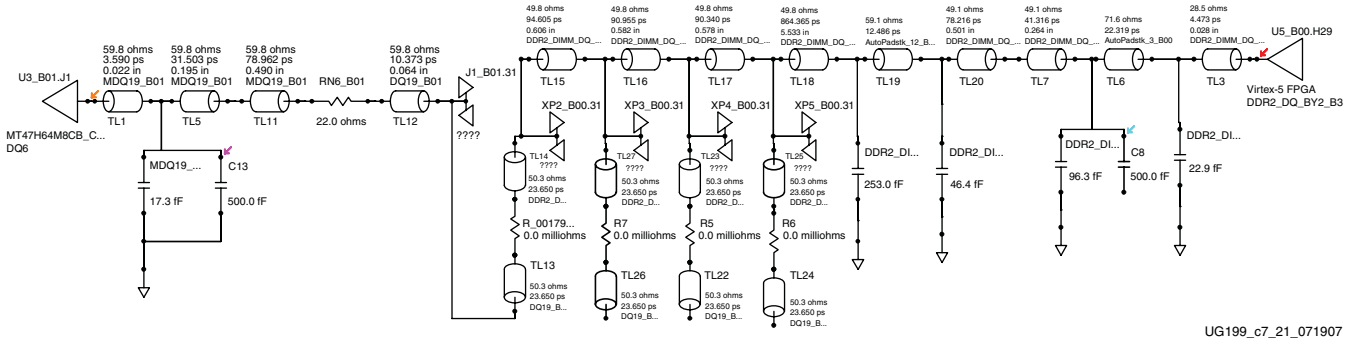

Figure 7-21: **Post-Layout IBIS Schematics of DDR2 DIMM Write Data Bit (DDR2_DIMM_DQ_BY2_B3)**

Table 7-6: **Circuit Elements of DDR2 DIMM Write Data Bit (DDR2_DIMM_DQ_BY2_B3)**

Element	Designation	Description
Driver	U5.H29	FPGA SSTL18_II_DCI_O
Receiver	XP2-U3.J1	DDR2 DIMM, 75 Ω ODT
Probe Point	C13	Via under memory on DIMM
PCB Termination	None	ODT at load
Trace Length	Multiple TLs	8.975 inches

The IBIS schematics for DDR2 DIMM interface is extracted from a multi-board project definition of the two-board combination, which includes the ML561 motherboard and the DDR2 DIMM at the XP2 connector of the motherboard. The impedance characteristics of the Molex socket pin (XP2, pin 31) is also included in the IBIS model as a (TL13, R_00179_CONN_0001, TL14) combination.

The ML561 board under test (S/N 103) is assembled with DDR2 sockets XP3, XP4, and XP5, which can be utilized for deep DIMM interfaces as described in Table 3-2, page 19 and Figure 3-2, page 20. To accurately represent the IBIS model of the DDR2_DIMM_DQ_BY2_B3 signal, the IBIS schematics in Figure 7-21 have added stubs for the three socket pins at the XP3, XP4, and XP5 connectors.

The DDR2 DIMM used for this correlation testing is a single-rank DIMM part (Micron part number MT9HTF6472xx-667). Thus for hardware measurements closest to the load, a probe point via on the DIMM for pin U3.J1 is available.

Table 7-7: **DDR2 DIMM Write Operation Correlation Results**

Measurement	DVW (%UI)	ISI (% UI)	Noise Margin (VIH + VIL) = Total (% of VREF)	Overshoot / Undershoot Margin (% of VREF)
Hardware at Probe Point	942 ps (62.8%)	(300 + 200) = 500 ps (33.3%)	(110 + 100) = 210 mV (23.3%)	(620 + 620) = 1240 mV (137.7%)
Simulation correlation at memory via (C13) slow-weak corner	1.16 ns (77.3%)	(80 + 54) = 134 ps (8.9%)	(172 + 150) = 322 mV (35.9%)	(606 + 636) =1242 mV (138%)
Correlation Delta: HW vs. Simulation	218 ps (14.5%)	366 ps (24.4%)	112 mV (12.6%)	2 mV (0.3%)
Extrapolation at IOB slow-weak corner	1.23 ns (82%)	(85 + 32) = 117 ps (7.8%)	(178 + 137) = 315 mV (35.0%)	(604 + 632) = 1236 mV (137.3%)
Extrapolation at IOB fast-strong corner	1.32 ns (88%)	(54 + 46) = 100 ps (6.7%)	(146 + 107) = 253 mV (28.1%)	(457 + 524) = 981 mV (109.0%)

DDR2 DQ is a bidirectional signal. To perform hardware measurements for a Write operation that is not interrupted by a Read response or a Refresh operation, the testbench on FPGA2 is controlled by DIP switches (SW1) as indicated in Table 7-8.

Table 7-8: **DIP[1:2] Settings**

Setting	Description
`2'b00` or `2'b11`	Normal alternating Write/Read sequence
`2'b01`	Write only, Refresh disabled
`2'b10`	Write once, then Read only, Refresh disabled



Figure 7-22: **DDR2 DIMM Write HW Measurement - Eye Scope Shot at Probe Point #1 (DDR2 Memory Via)**

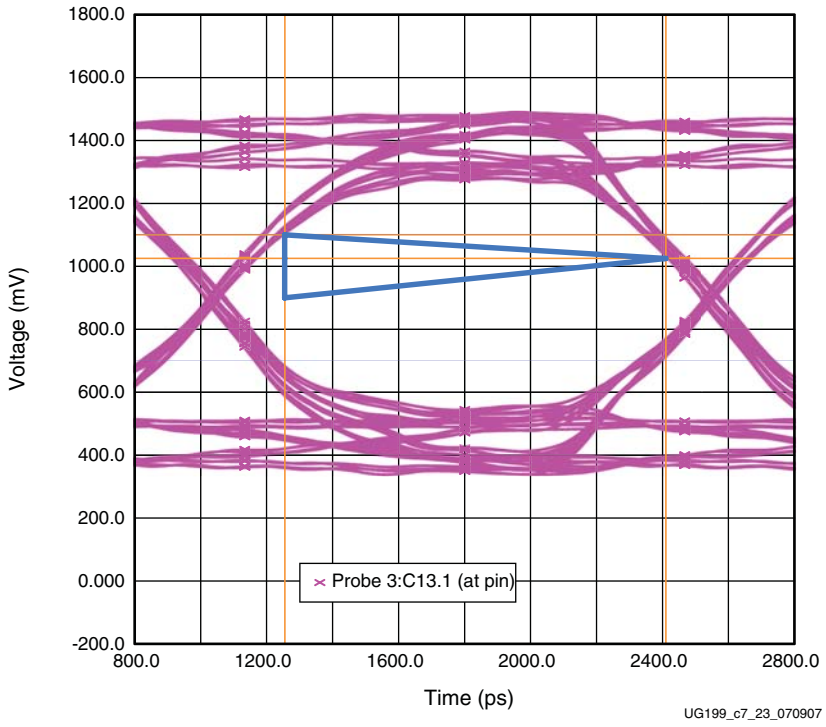

- 333 MHz, Slow, PRBS6, 77% UI
- Cursor 1: 1.1004V, 1.2553 ns
- Cursor 2: 1.0253V, 2.4105 ns
- Delta Voltage = 75.2 mV, Delta Time = 1.1582 ns (77% UI)

Figure 7-23: **DDR2 DIMM Write Correlation - Eye Scope Shot at Probe Point #1 (Slow Corner)**

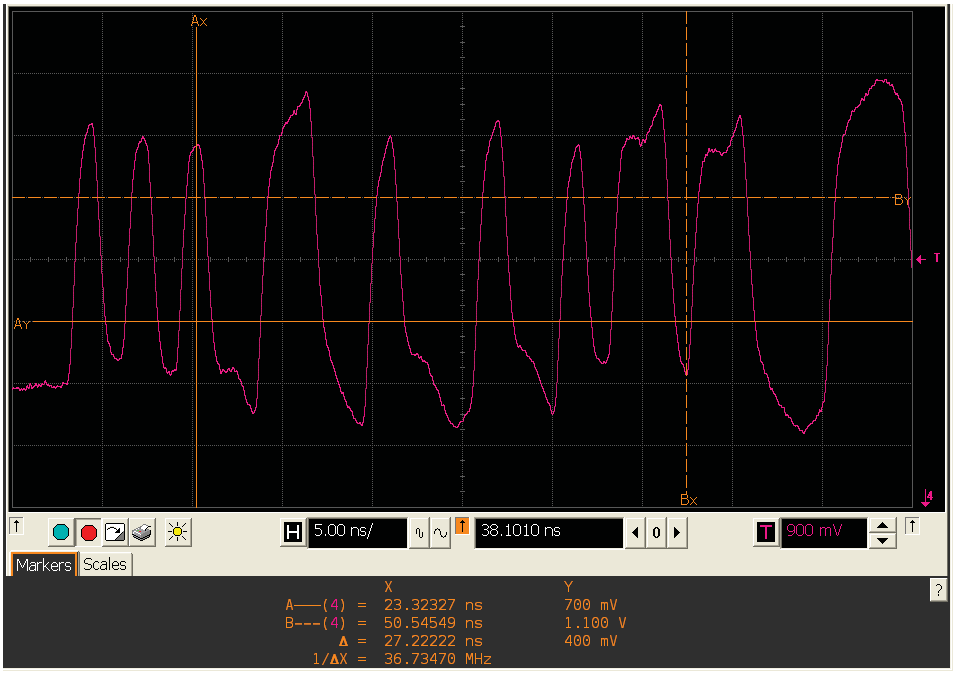

Figure 7-24: **DDR2 DIMM Write HW Measurement - Waveform Scope Shot at Probe Point #1 (DDR2 Memory Via)**

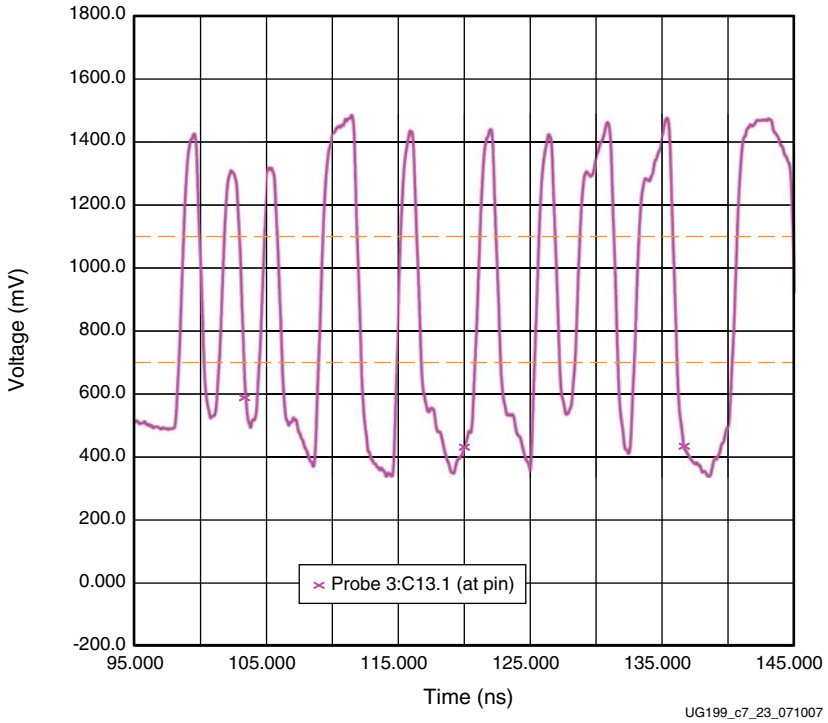

Figure 7-25: **DDR2 DIMM Write Correlation - Waveform Scope Shot at Probe Point #1 (Slow Corner)**

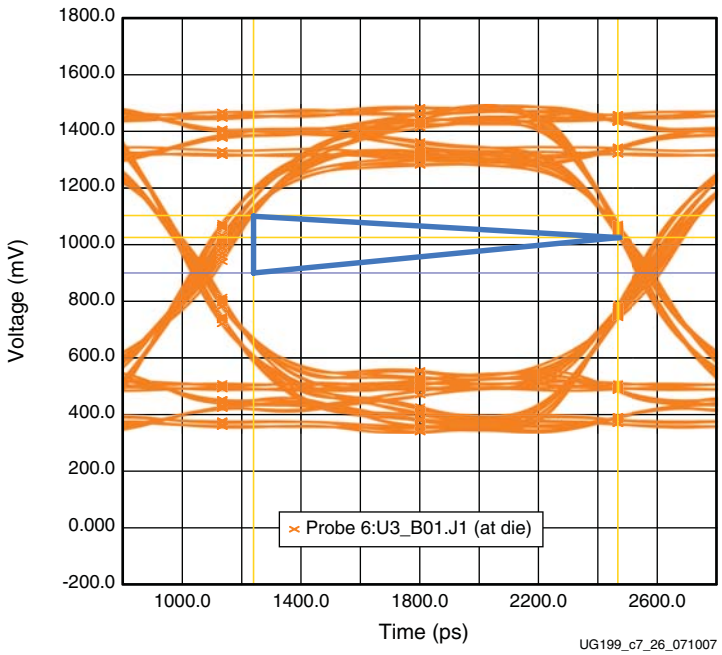

- 333 MHz, Slow, PRBS6, 82% UI
- Cursor 1: 1.1028V, 1.2399 ns
- Cursor 2: 1.0253V, 2.4671 ns
- Delta Voltage = 77.5 mV, Delta Time = 1.2272 ns (82% UI)

Figure 7-26: **DDR2 DIMM Write Extrapolation - Eye Scope Shot at Receiver IOB (Slow Corner)**

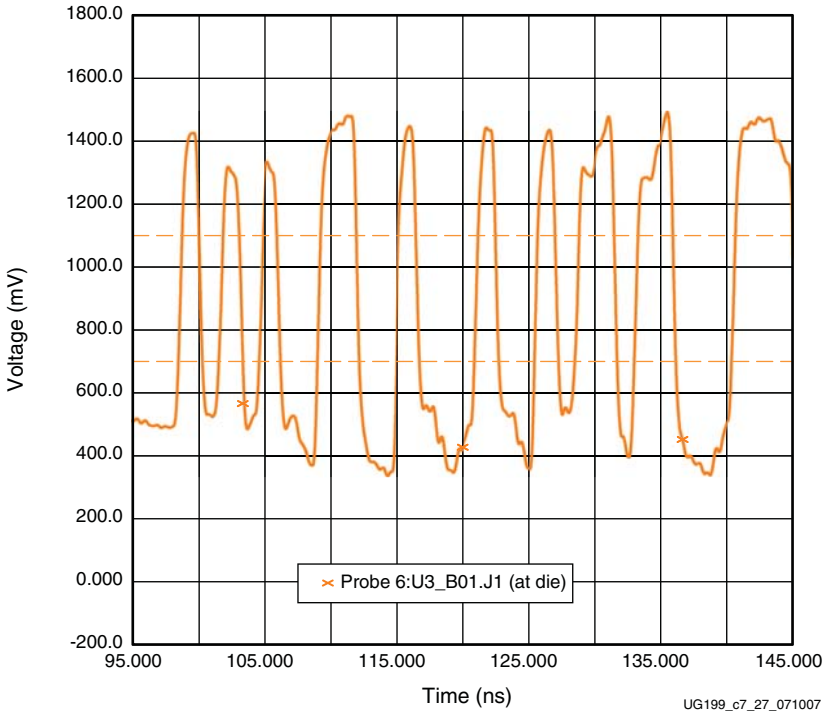

Figure 7-27: **DDR2 DIMM Write Extrapolation - Waveform Scope Shot at Receiver IOB (Slow Corner)**

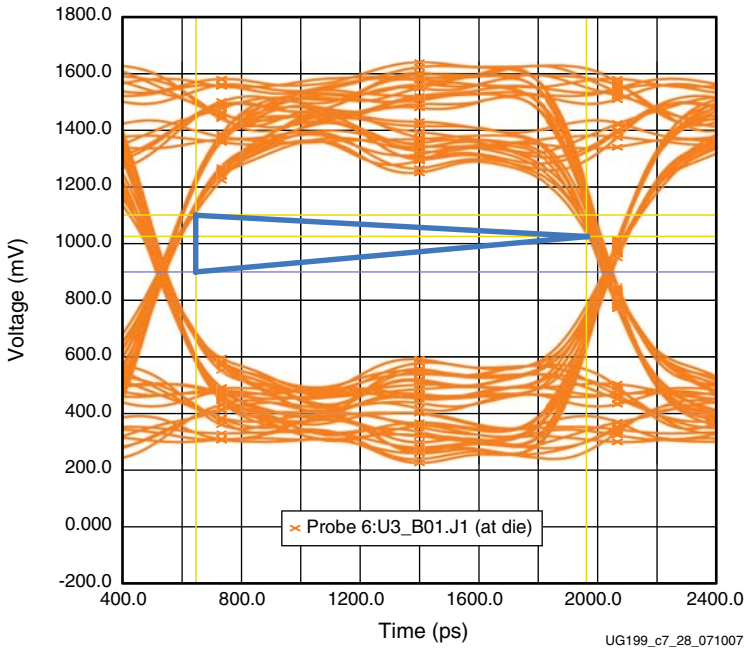

- 333 MHz, Fast, PRBS6, 88% UI
- Cursor 1: 1.1004V, 646.3 ps
- Cursor 2: 1.0273V, 1.9659 ns
- Delta Voltage = 73.1 mV, Delta Time = 1.3196 ns (88% UI)

Figure 7-28: **DDR2 DIMM Write Extrapolation - Eye Scope Shot at Receiver IOB (Fast Corner)**

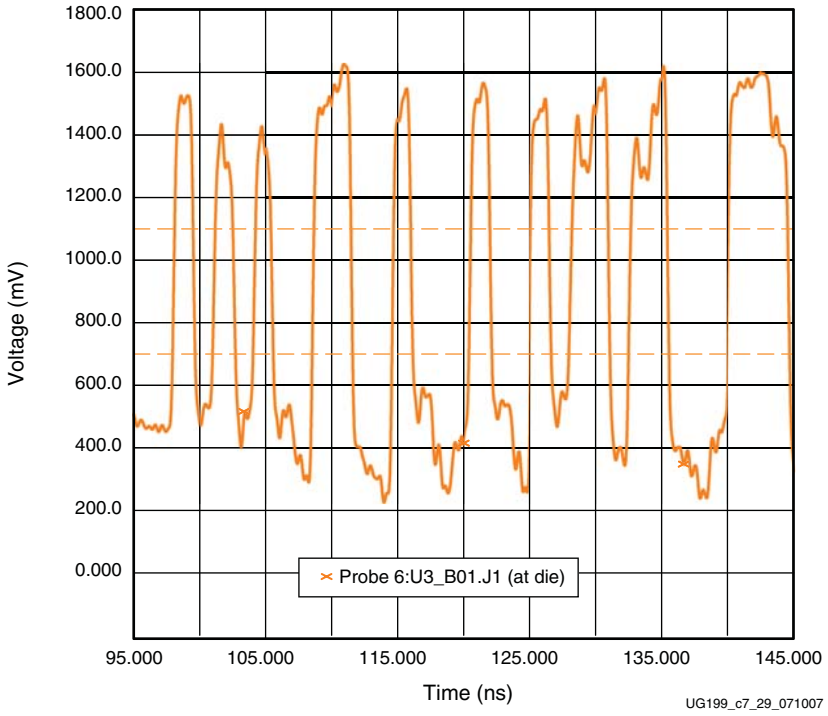

Figure 7-29: **DDR2 DIMM Write Extrapolation - Waveform Scope Shot at Receiver IOB (Fast Corner)**

DDR2 DIMM Read Operation

This subsection shows the test results for the DDR2_DIMM_DQ_BY2_B3 signal from the DDR2 DIMM (XP2) to FPGA2 (U5) measured at 333 MHz (667 Mb/s), where the unit interval (UI) = 1.5 ns.

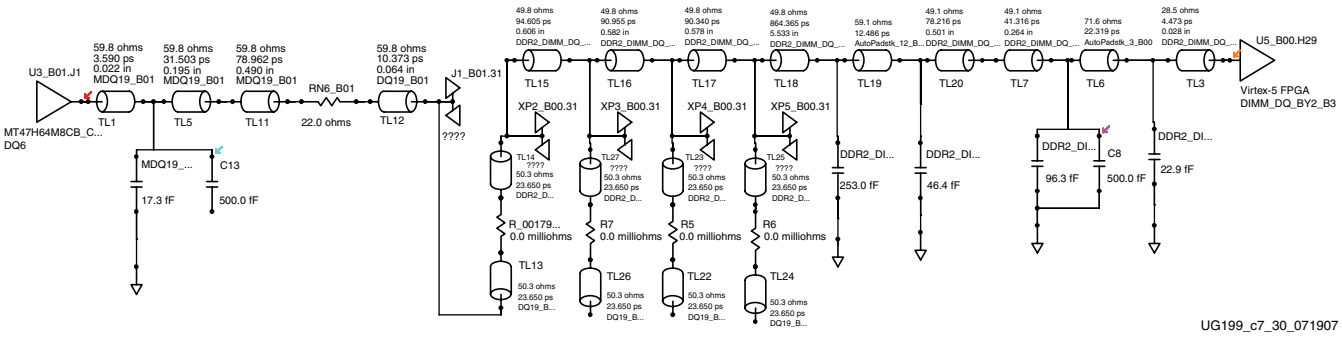

Figure 7-30: **Post-Layout IBIS Schematics of the DDR2 DIMM Read Data Bit (DDR2_DIMM_DQ_B)**

Table 7-9: **Circuit Elements of DDR2 DIMM Read Data Bit (DDR2_DIMM_DQ_BY2_B3)**

Element	Designation	Description
Driver	XP2-U3.J1	DDR2 DIMM
Receiver	U5.H29	FPGA SSTL18_II_DCI_I
Probe Point	C8	Via under FPGA2 (U5.H29)
PCB Termination	None	DCI at load
Trace Length	Multiple TLs	8.975 inches

Table 7-10: **DDR2 DIMM Read Operation Correlation Results**

Measurement	DVW (% UI)	ISI (% UI)	Noise Margin (VIH + VIL) = Total (% of VREF)	Overshoot / Undershoot Margin (% of VREF)
Hardware at probe point	904 ps (60%)	(107 + 62) = 169 ps (11.2%)	(242 + 258) = 500 mV	(623 + 613) = 1236 mV (137.3%)
Simulation correlation slow-weak corner	865 ps (59%)	(130 + 83) = 213 ps (14.2%)	(+292 + 298) = 590 mV	(524 + 504) = 1028 mV (114.2%)
Correlation Delta: HW vs. Simulation	39 ps (2.6%)	44 ps (2.9%)	90 mV (10%)	208 mV (23.1%)
Extrapolation at IOB slow-weak corner	1.23 ns (82%)	(139 + 75) = 224 ps (14.9%)	(243 + 303) = 546 mV (60.7%)	(594 + 544) = 1138 mV (116.5%)
Extrapolation at IOB fast-strong corner	1.24 ns (83%)	(131 + 60) = 191 ps (12.7%)	(288 + 282) = 570 mV (63.3%)	(+481 + 508) = 989 mV (109.9%)

To perform hardware measurements for a Read operation that is not interrupted by a Write or a Refresh operation, the testbench on FPGA1 is controlled by the following DIP switch (SW1) setting:

- DIP[1:2] = `2'b10` – Write once, then Read only, Refresh disabled

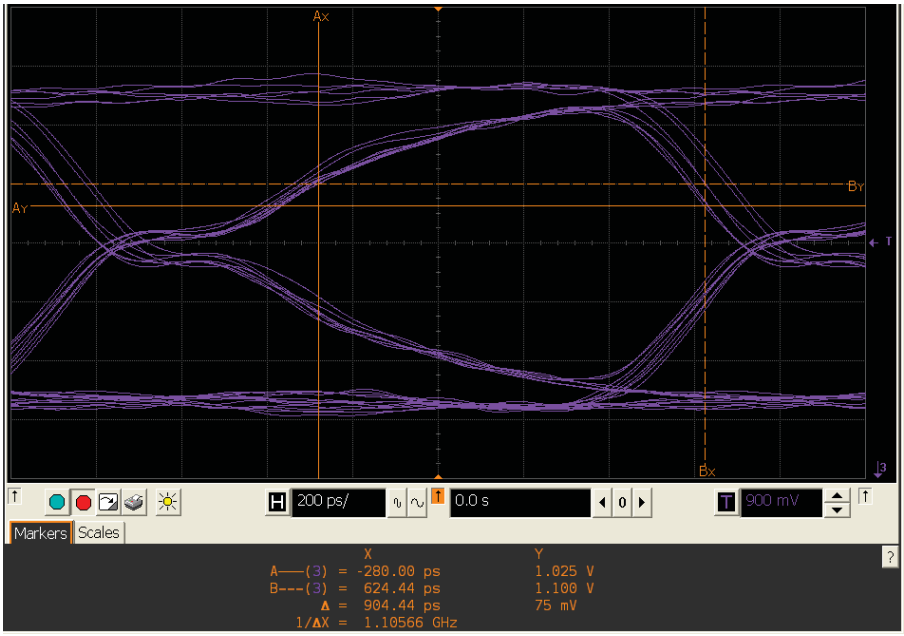

Figure 7-31: **DDR2 DIMM Read HW Measurement - Eye Scope Shot at Probe Point (FPGA1 Via)**

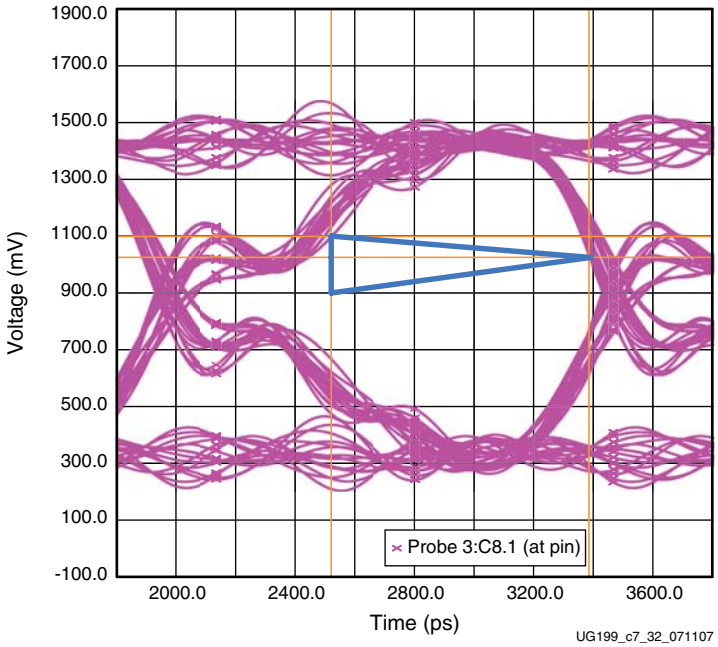

- 333 MHz, Slow, PRBS6, 59% UI
- Cursor 1: 1.0988V, 2.5207 ns
- Cursor 2: 1.0254V, 3.3859 ns
- Delta Voltage = 73.4 mV, Delta Time = 865.2 ps (59% UI)

Figure 7-32: **DDR2 DIMM Read Correlation - Eye Scope Shot at Probe Point (Slow Corner)**

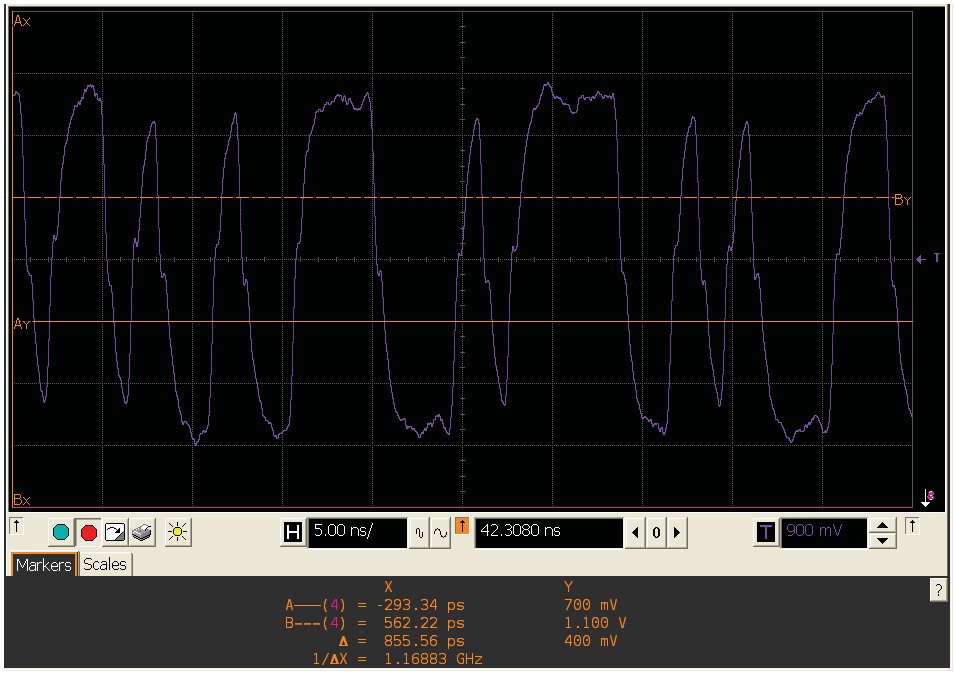

Figure 7-33: **DDR2 DIMM Read HW Measurement - Waveform Scope Shot at Probe Point (FPGA1 Via)**

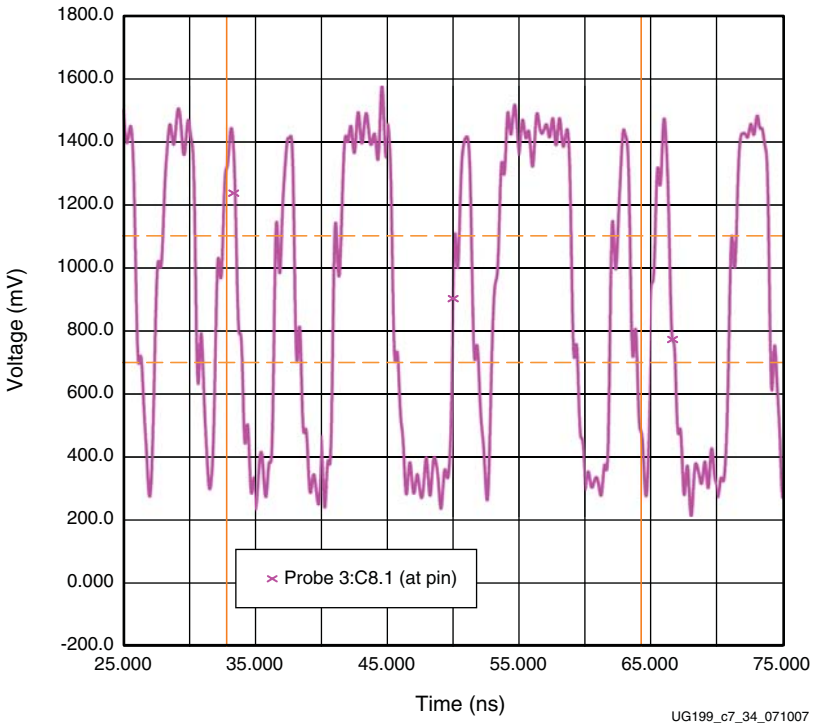

Figure 7-34: **DDR2 DIMM Read Correlation - Waveform Scope Shot at Probe Point (Slow Corner)**

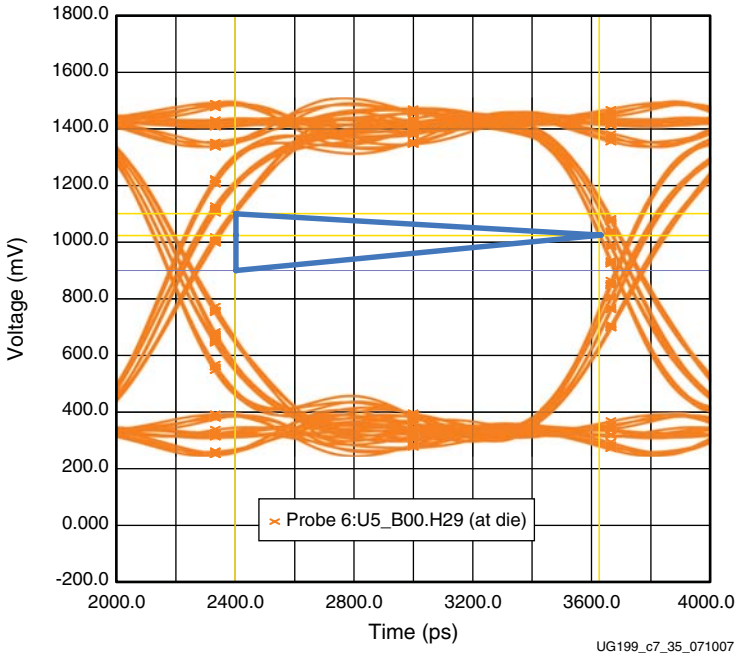

- 333 MHz, Slow, PRBS6, 82% UI
- Cursor 1: 1.1007V, 2.3997 ns
- Cursor 2: 1.0232V, 3.6257 ns
- Delta Voltage = 77.5 mV, Delta Time = 1.2260 ns (82% UI)

Figure 7-35: **DDR2 DIMM Read Extrapolation - Eye Scope Shot at Receiver IOB (Slow Corner)**

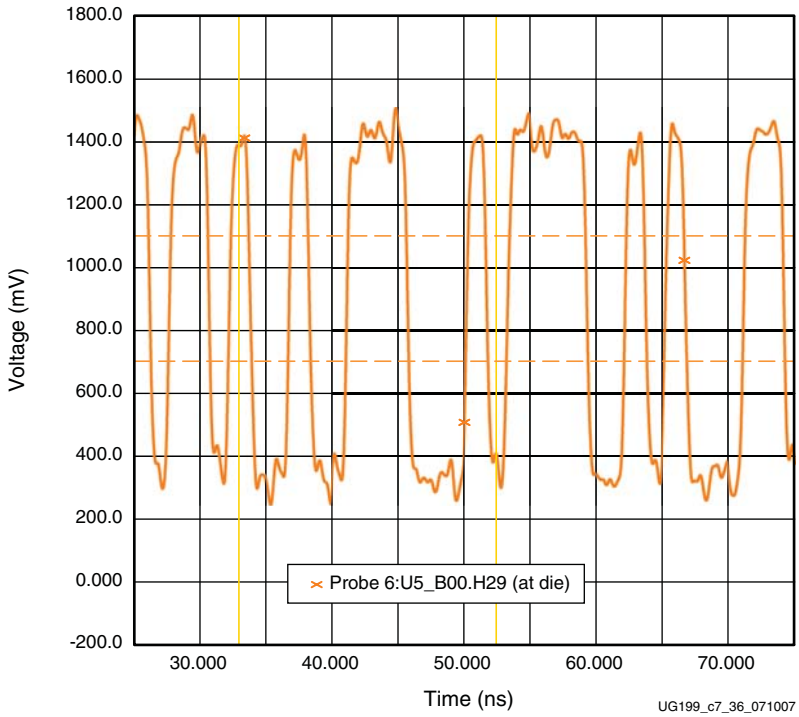

Figure 7-36: **DDR2 DIMM Read Extrapolation - Waveform Scope Shot at Receiver IOB (Slow Corner)**

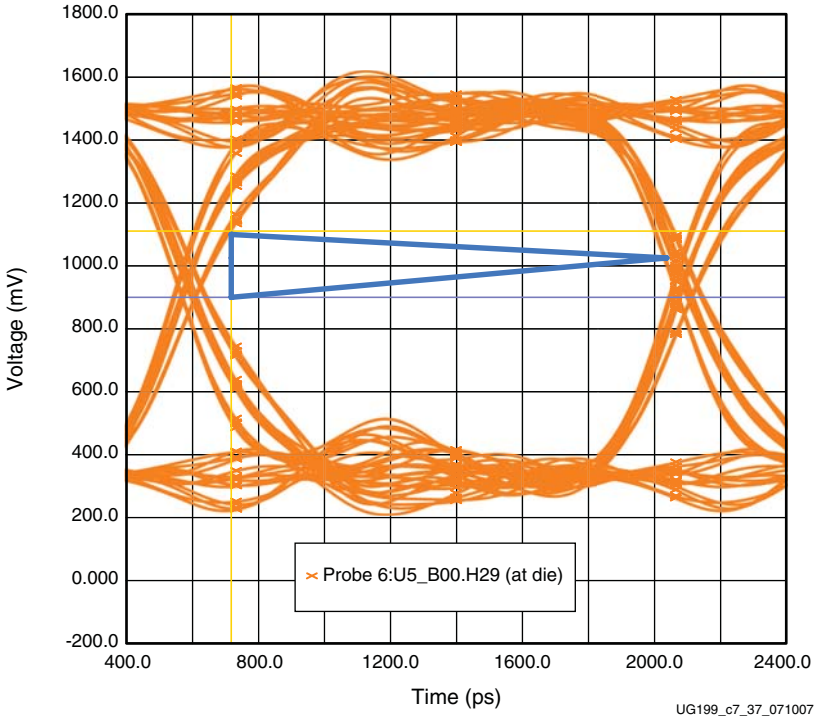

- 333 MHz, Fast, PRBS6, 83% UI
- Cursor 1: 697.0 mV, 763.0 ps
- Cursor 2: 776.6 mV, 2.0052 ns
- Delta Voltage = 79.5 mV, Delta Time = 1.2422 ns (83% UI)

Figure 7-37: **DDR2 DIMM Read Extrapolation - Eye Scope Shot at Receiver IOB (Fast Corner)**

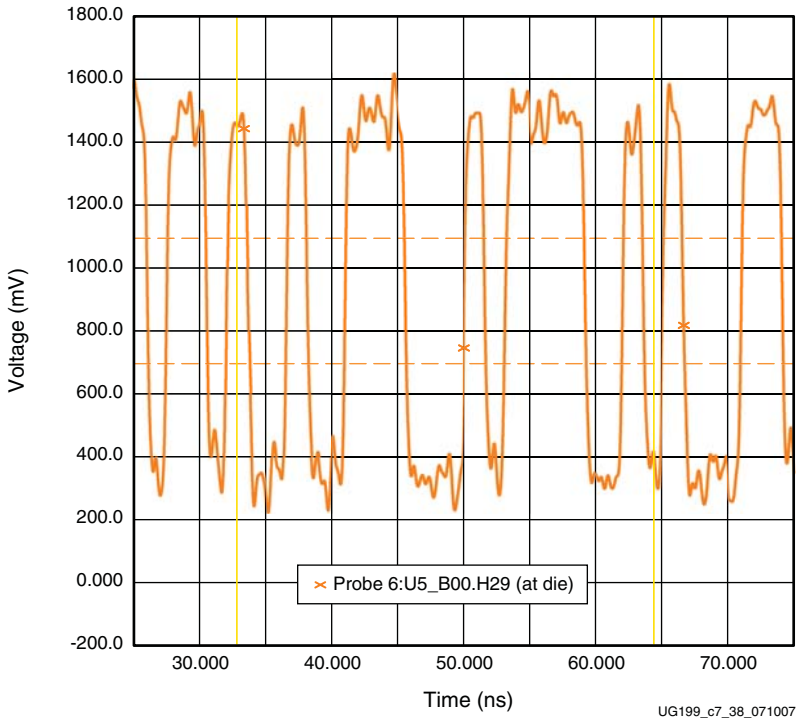

Figure 7-38: **DDR2 DIMM Read Extrapolation - Waveform Scope Shot at Receiver IOB (Fast Corner)**

QDRII Write Operation

This subsection shows the test results for the QDR2_D_BY0_B5 signal from FPGA3 (U34) to QDRII memory (U35) measured at 300 MHz (600 Mb/s), where the unit interval (UI) = 167 ns.

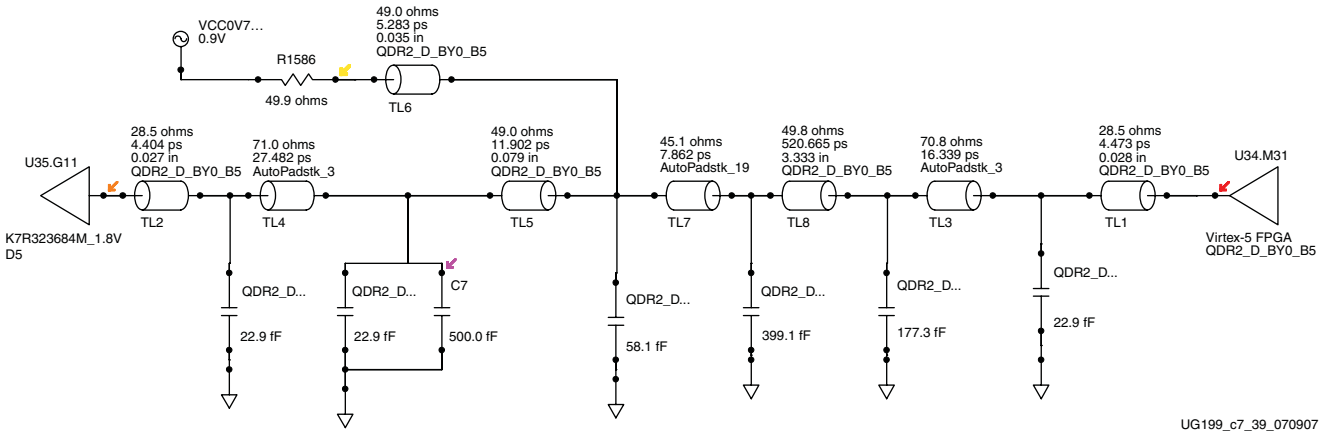

Figure 7-39: **Post-Layout IBIS Schematics of QDRII Write Data Bit (QDR2_D_BY0_B5)**

Table 7-11: **Circuit Elements of QDRII Write Data bit (QDR2_D_BY0_B5)**

Element	Designation	Description
Driver	U34.M31	FPGA HSTL_I_18
Receiver	U35.G11	QDRII memory
Probe Point	C7	Via under Memory
PCB Termination	R1586	External termination at memory
Trace Length	TL 2, 5, 8, 1	3.46 inches

Table 7-12: **QDRII Write Operation Correlation Results**

Measurement	DVW (% UI)	ISI (% UI)	Noise Margin (VIH + VIL) = Total (% of VREF)	Overshoot / Undershoot Margin (% of VREF)
Hardware at probe point	1.40 ns (84.1%)	(50 + 70) = 120 ps (7.2%)	(340 + 400) = 740 mV (82.2%)	(450 + 400) = 850 mV (94.5%)
Simulation correlation slow-weak corner	1.39 ns (83.5%)	(136 + 91) = 227 ps (13.6%)	(344 + 398) = 742 mV (82.5%)	(483 + 452) = 935 mV (103.9%)
Correlation Delta: HW vs. Simulation	10 ps (0.6%)	107 ps (6.4%)	2 mV (0.3%)	85 mV (9.4%)
Extrapolation at IOB slow-weak corner	1.38 ns (83%)	(172 + 141) = 313 ps (18.8%)	(329 + 358) = 687 mV (76.3%)	(400 + 361) = 761 mV (84.5%)
Extrapolation at IOB fast-strong corner	1.49 ns (89%)	(126 + 91) = 217 ps (13.0%)	(353 + 376) = 729 mV (81.0%)	(156 + 30) = 186 mV (20.7%)

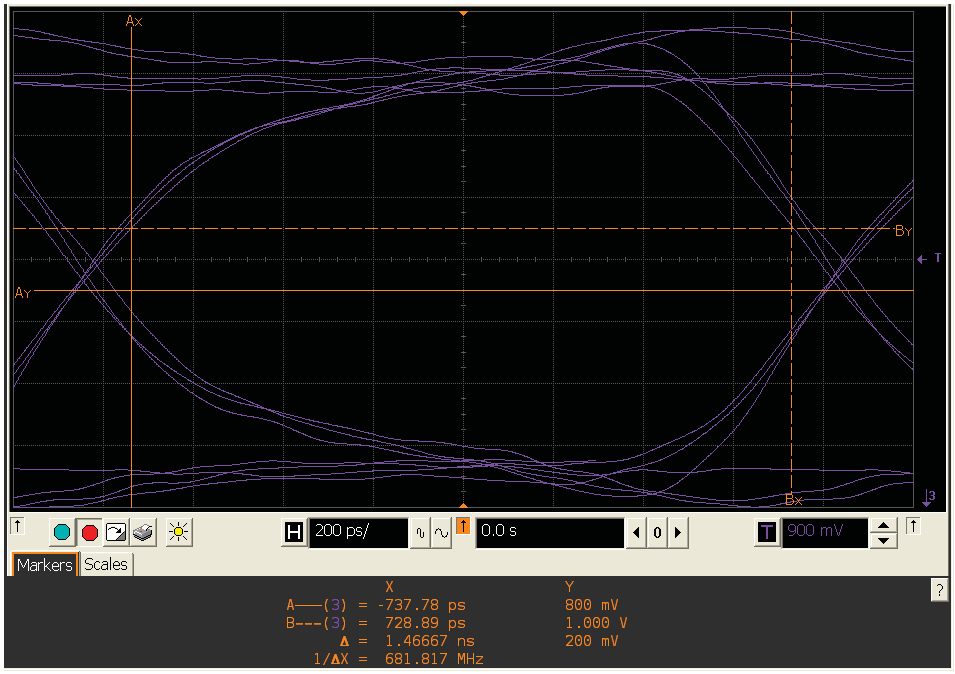

Figure 7-40: **QDRII Write HW Measurement - Eye Scope Shot at Probe Point (QDRII Memory Via)**

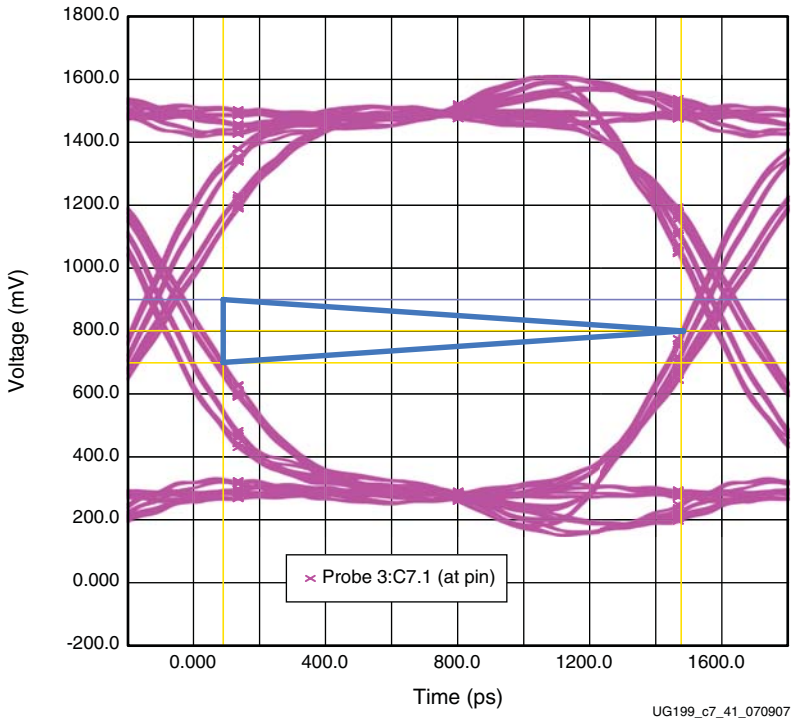

- 300 MHz, Slow, PRBS6, 83.5% UI
- Cursor 1: 699.1 mV, 90.0 ps
- Cursor 2: 801.0 mV, 1.4770 ns
- Delta Voltage = 101.9 mV, Delta Time = 1.3870 ns (83.5% UI)

Figure 7-41: **QDRII Write Correlation - Eye Scope Shot at Probe Point (Slow Corner)**

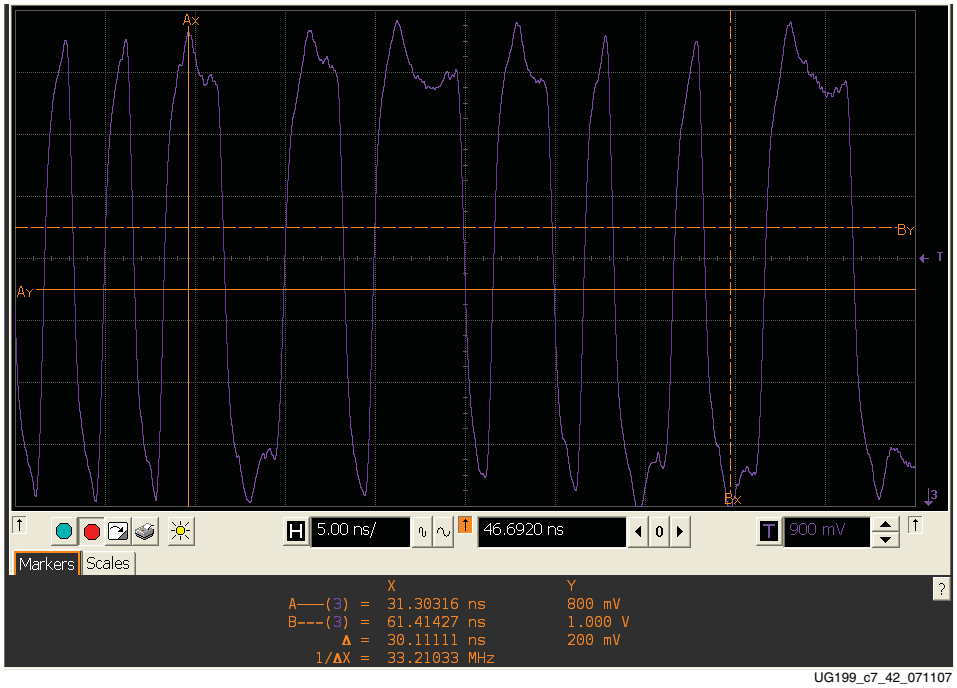

Figure 7-42: **QDRII Write HW Measurement - Waveform Scope Shot at Probe Point (QDRII Memory Via)**

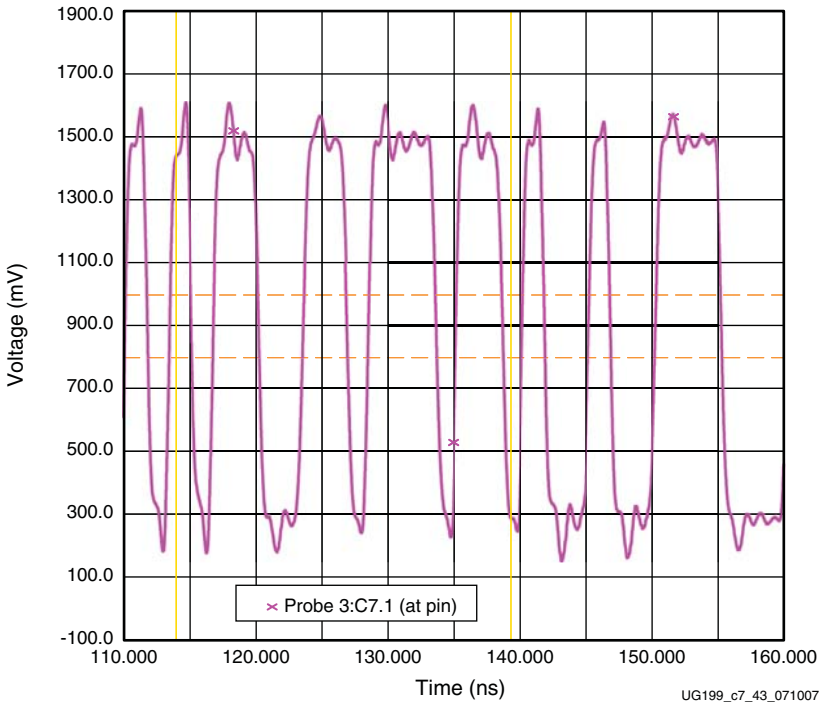

Figure 7-43: **QDRII Write Correlation - Waveform Scope Shot at Probe Point (Slow Corner)**

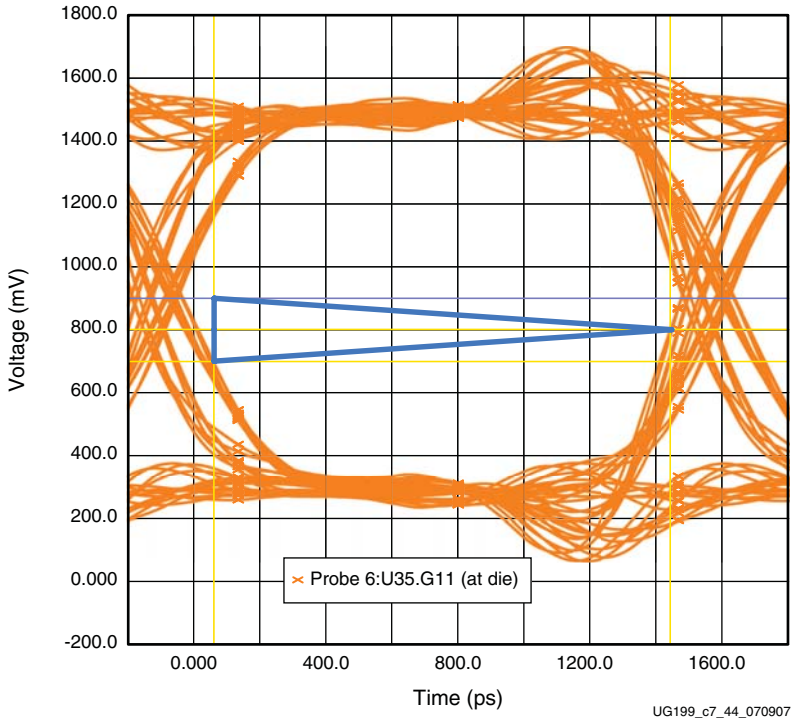

- 300 MHz, Slow, PRBS6, 83% UI
- Cursor 1: 699.1 mV, 61.3 ps
- Cursor 2: 801.0 mV, 1.4433 ns
- Delta Voltage = 101.9 mV, Delta Time = 1.3820 ns (83% UI)

Figure 7-44: **QDRII Write Extrapolation - Eye Scope Shot at Receiver IOB (Slow Corner)**

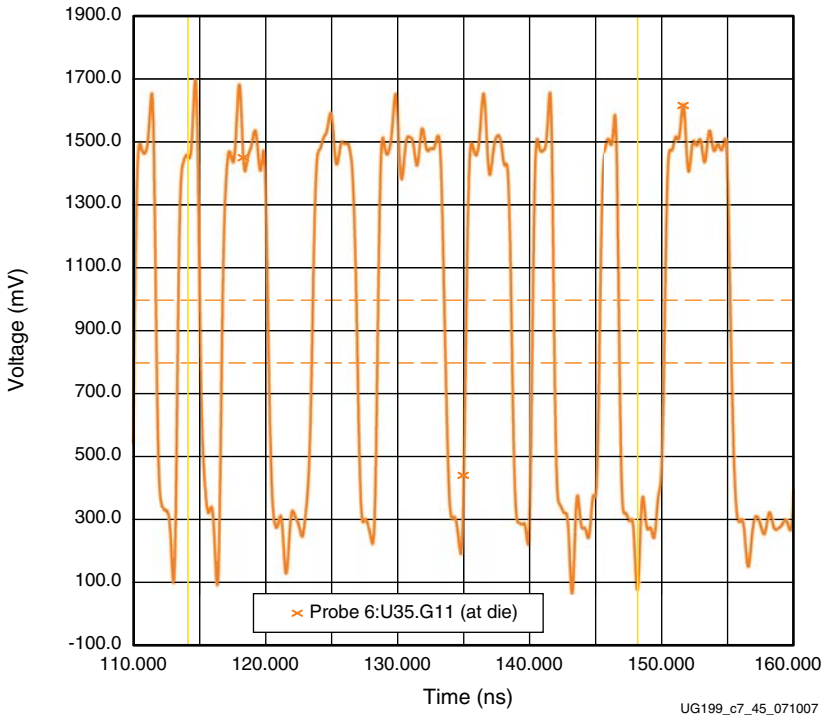

Figure 7-45: **QDRII Write Extrapolation - Waveform Scope Shot at Receiver IOB (Slow Corner)**

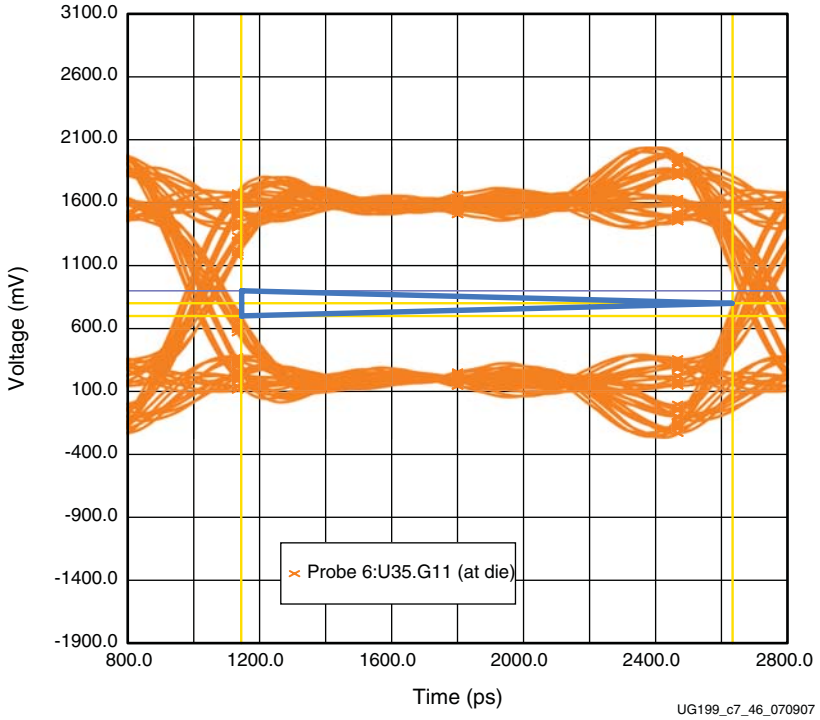

- 300 MHz, Fast, PRBS6, 89% UI
- Cursor 1: 699.1 mV, 1.1440 ns
- Cursor 2: 801.0 mV, 2.6334 ns
- Delta Voltage = 101.9 mV, Delta Time = 1.4894 ns (89% UI)

Figure 7-46: **QDRII Write Extrapolation - Eye Scope Shot at Receiver IOB (Fast Corner)**

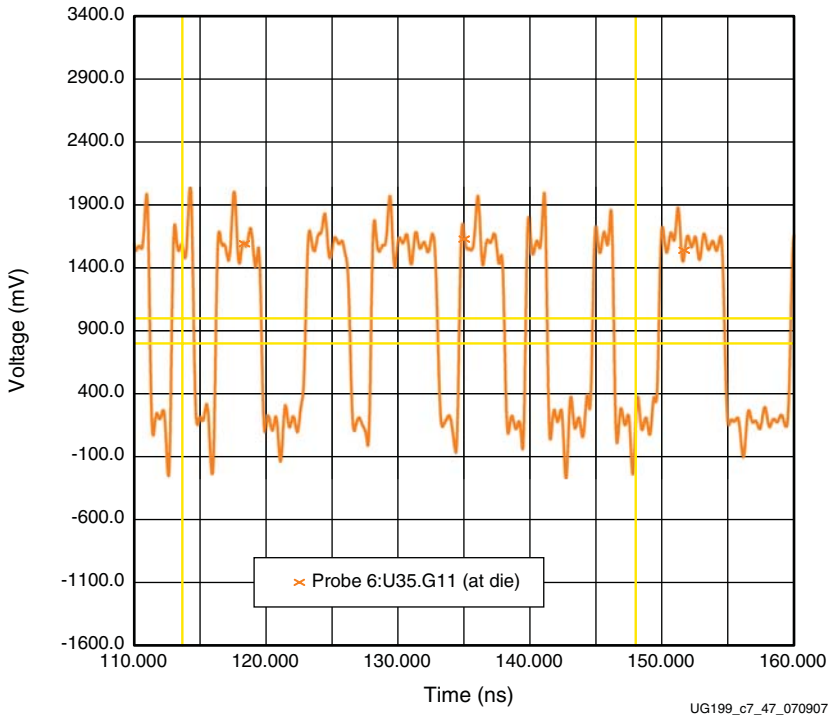

Figure 7-47: **QDRII Write Extrapolation - Waveform Scope Shot at Receiver IOB (Fast Corner)**

QDRII Read Operation

This subsection shows the test results for the QDR2_Q_BY0_B5 signal from QDRII memory (U35) to FPGA3 (U34) measured at 300 MHz (600 Mb/s), where the unit interval (UI) = 1.67 ns.

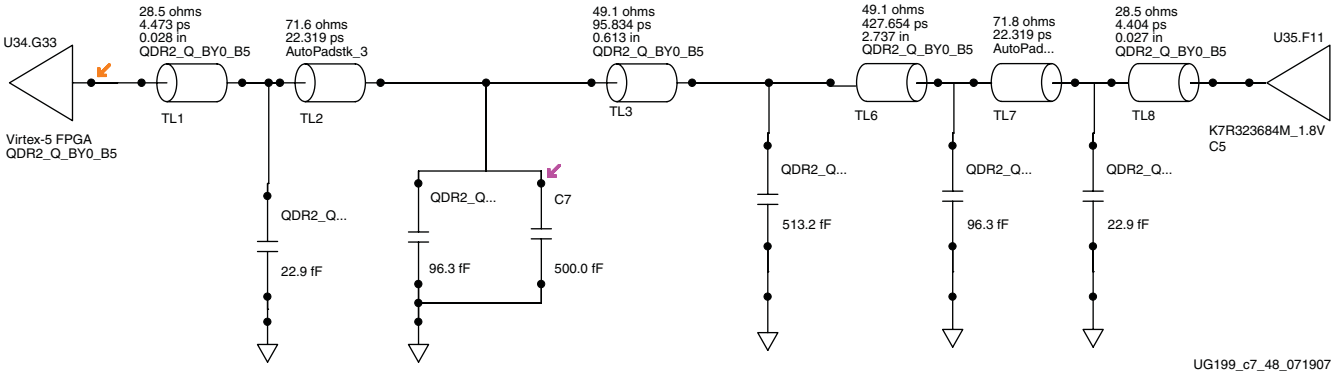

Figure 7-48: **Post-Layout IBIS Schematics of QDRII Read Data Bit (QDR2_Q_BY0_B5)**

Table 7-13: **Circuit Elements of QDRII Read Data Bit (QDR2_Q_BY0_B5)**

Element	Designation	Description
Driver	U36.F11	QDRII memory
Receiver	U34.G33	FPGA HSTL_I_DCI_18
Probe Point	C7	Via under FPGA3 (U34)
PCB Termination	None	DCI at FPGA
Trace Length	TL 1, 3, 6, 8	3.41 inches

Table 7-14: **QDRII Read Operation Correlation Results**

Measurement	DVW (% UI)	ISI (% UI)	Noise Margin (VIH + VIL) = Total (% of VREF)	Overshoot / Undershoot Margin (% of VREF)
Hardware at probe point	1.09 ns (65.4%)	(70 + 50) = 120 ps (7.2%)	(400 + 400) = 800 mV (88.9%)	(500 + 500) = 1000 mV (111.1%)
Simulation correlation slow-weak corner	984 ps (59.0%)	(72 + 75) = 147 ps (8.8%)	(250 + 264) = 514 mV (57.1%)	(532 + 518) = 1050 mV (105.5%)
Correlation Delta: HW vs. Simulation	106 ps (6.4%)	27 ps (1.6%)	386 mV (31.8%)	50 mV (5.6%)
Extrapolation at IOB slow-weak corner	1.46 ns (88%)	(49 + 36) = 85 ps (5.1%)	(237 + 272) = 509 mV (56.5%)	(608 + 575) = 1183 mV (131.5%)
Extrapolation at IOB fast-strong corner	1.45 ns (87%)	(27 + 39) = 66 ps (4.0%)	(341 +201) = 542 mV (60.3%)	(532 + 661) = 1193 mV (132.6%)

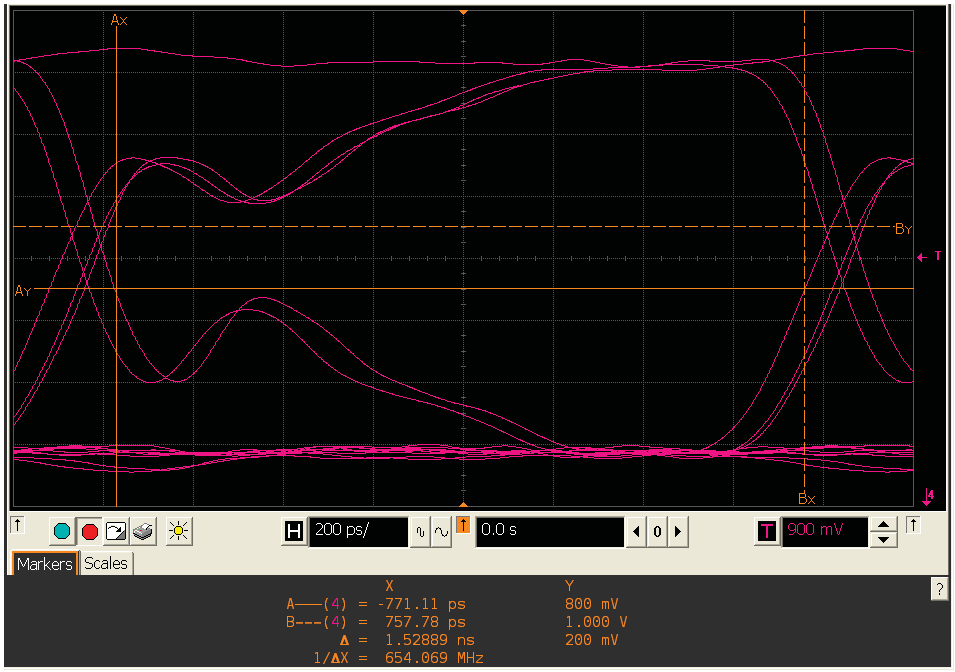

Figure 7-49: **QDRII Read HW Measurement - Eye Diagram Scope Shot at Probe Point (FPGA3 Via)**

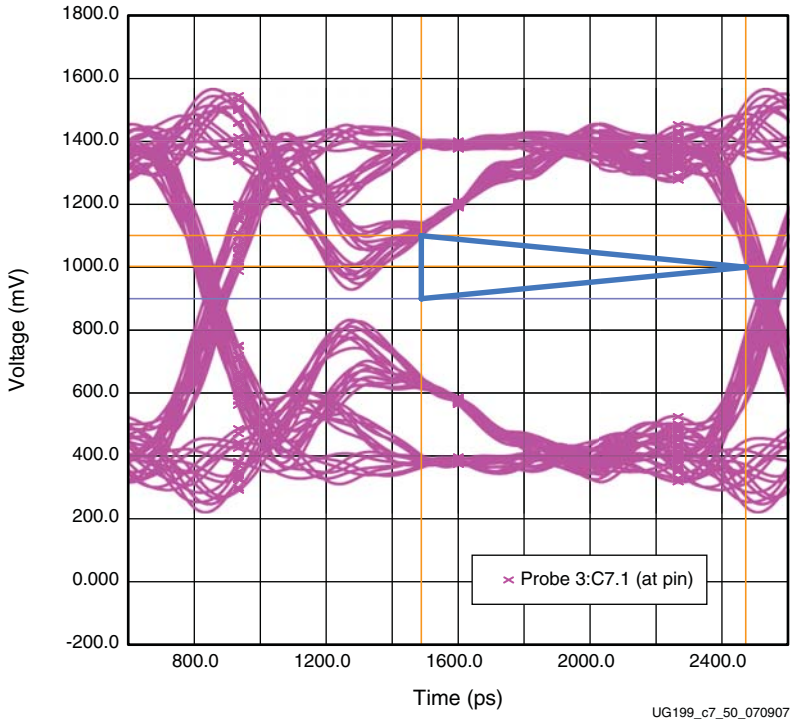

- 300 MHz, Slow, PRBS6, 59% UI
- Cursor 1: 1.1007V, 1.4881 ns
- Cursor 2: 1.0029V, 2.4719 ns
- Delta Voltage = 97.9 mV, Delta Time = 983.8 ps (59% UI)

Figure 7-50: **QDRII Read Correlation - Eye Diagram Scope Shot at Probe Point (Slow Corner)**

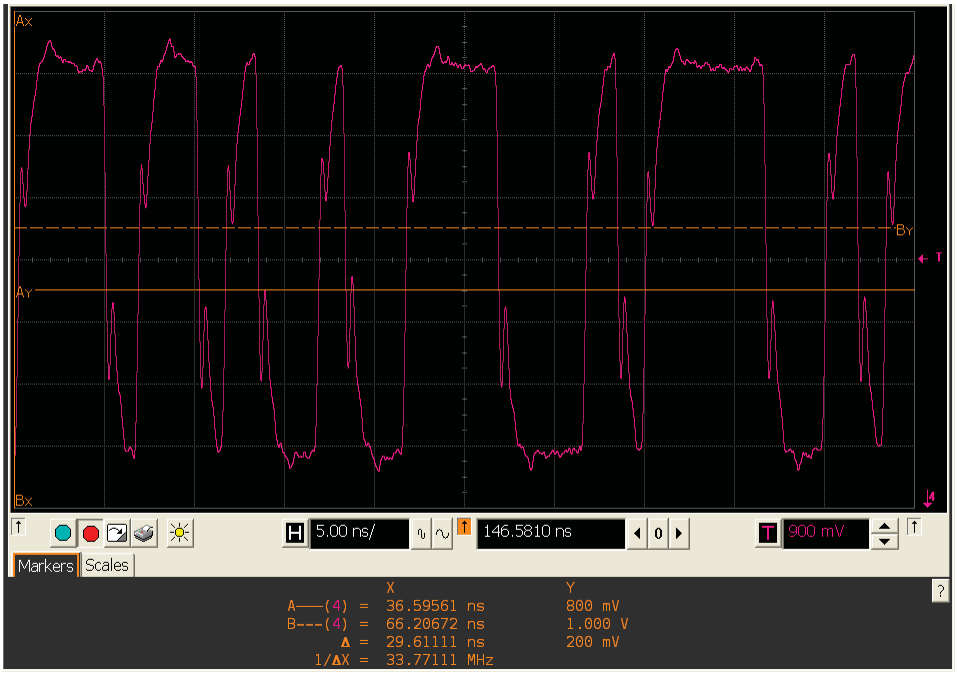

Figure 7-51: **QDRII Read HW Measurement - Waveform Scope Shot at Probe Point (FPGA3 Via)**

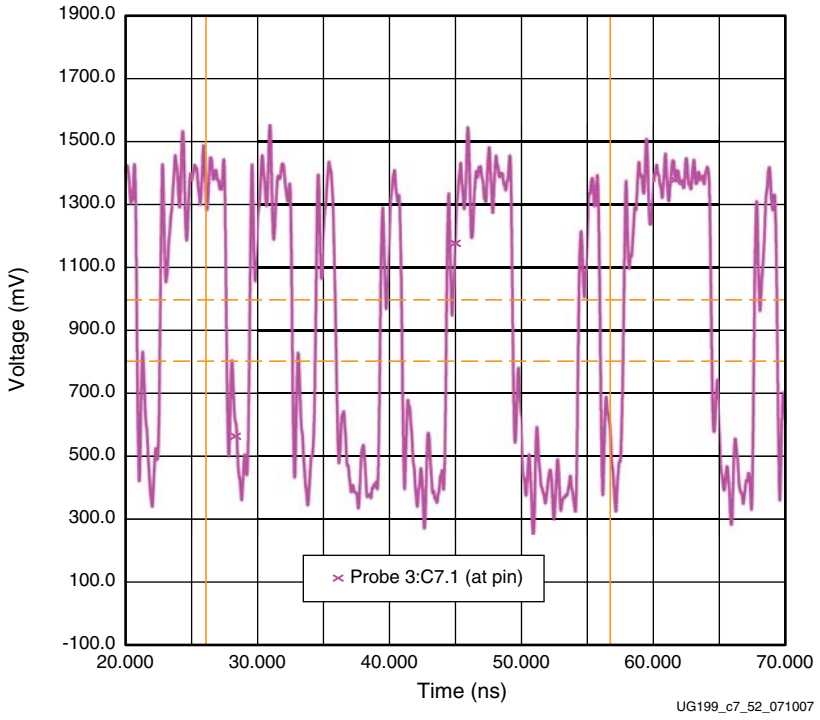

Figure 7-52: **QDRII Read Correlation - Waveform Scope Shot at Probe Point (Slow Corner)**

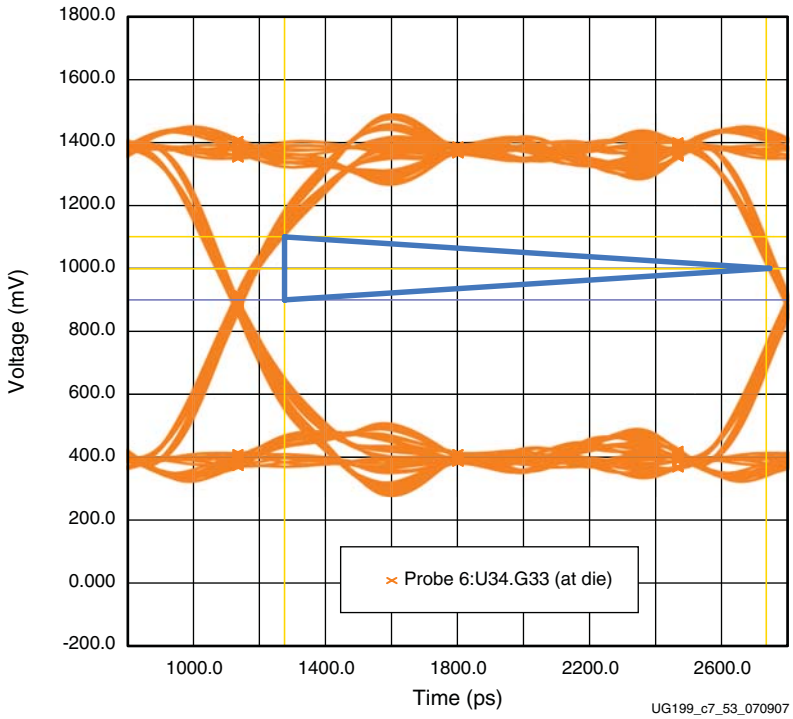

- 300 MHz, Slow, PRBS6, 88% UI
- Cursor 1: 1.1008V, 1.2758 ns
- Cursor 2: 998.9 mV, 2.7352 ns
- Delta Voltage = 101.9 mV, Delta Time = 1.4594 ns (88% UI)

Figure 7-53: **QDRII Read Extrapolation - Eye Scope Shot at Receiver IOB (Slow Corner)**

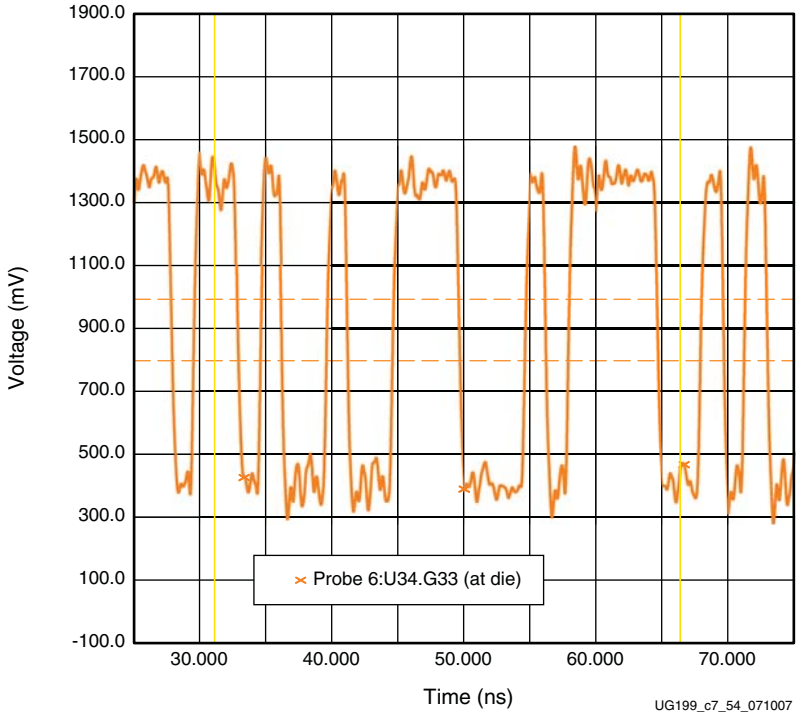

Figure 7-54: **QDRII Read Extrapolation - Waveform Scope Shot at Receiver IOB (Slow Corner**

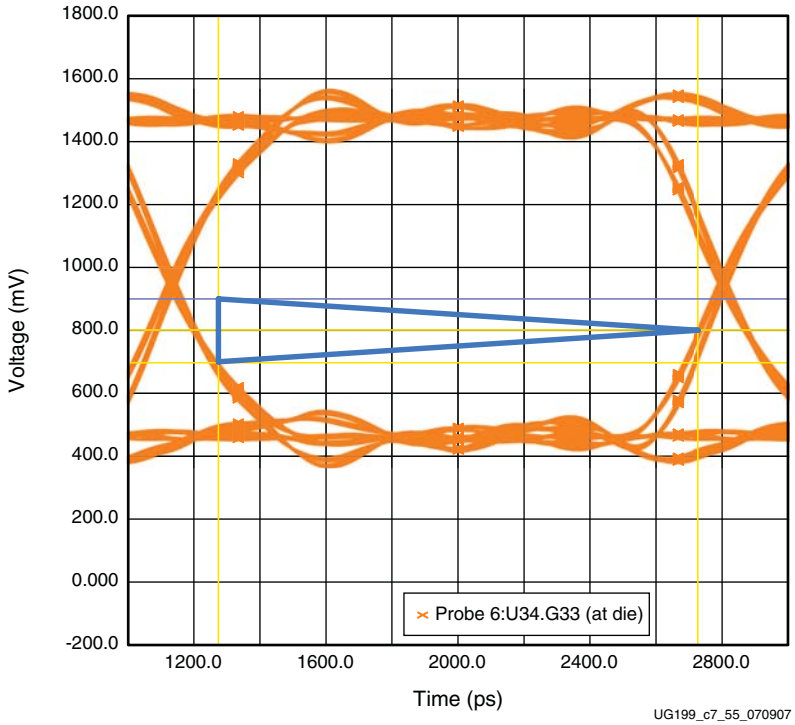

- 300 MHz, Fast, PRBS6, 87% UI
- Cursor 1: 801 mV, 2.7263 ns
- Cursor 2: 697.0 mV, 1.2744 ns
- Delta Voltage = 104.0 mV, Delta Time = 1.4519 ns (87% UI)

Figure 7-55: **QDRII Read Extrapolation - Eye Scope Shot at Receiver IOB (Fast Corner)**

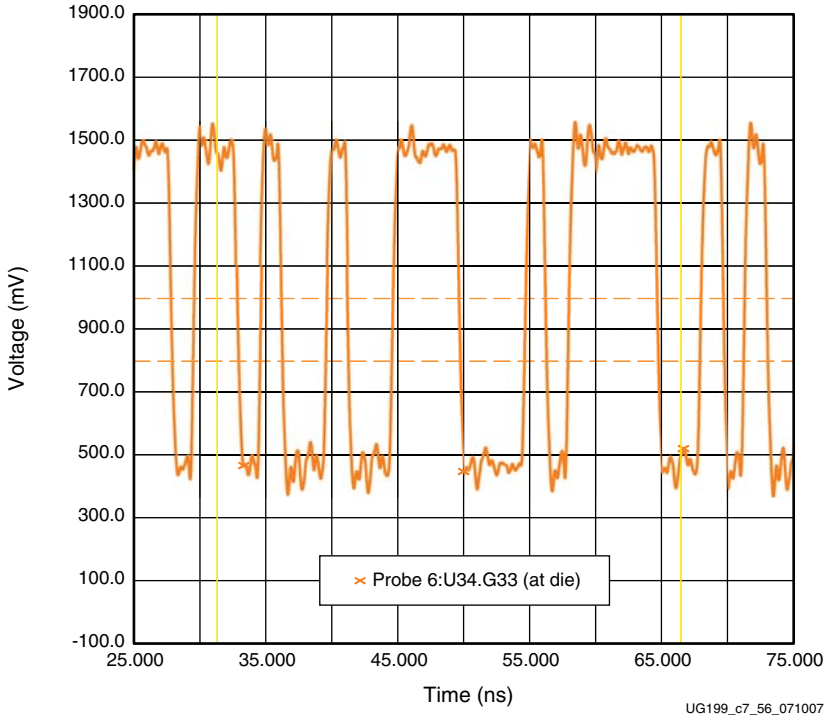

Figure 7-56: **QDRII Read Extrapolation - Waveform Scope Shot at Receiver IOB (Fast Corner)**

Summary and Recommendations

The first objective of this exercise is to establish correlation between hardware measurements and the simulation at the probe point. The intention was to validate the simulation model for the targeted signal. The degree of correlation achieved is looked at in terms of absolute difference as well as relative percentage. The relative percentage differences are presented in terms of unit interval (UI) for timing characteristics and in terms of VREF voltage for the voltage margin characteristics.

Correlation simulation is performed under *ideal* conditions, that is, the stimulus is generated without any jitter. On the other hand, the hardware measurements are subject to jitter (which tends to increase ISI), board-level power fluctuation (which can affect the eye amplitude), and stability of the probing station. Thus some correlation differences are expected. The user ultimately uses his or her own judgment to account for these differences, and adjusts the values extrapolated for quality of signal at the receiver IOB.

Table 7-15 contains this information for all six test signals.

Table 7-15: **Summary of Correlation Differences: Hardware vs. Simulation**

Operation	ΔDVW (% UI(1))	ΔISI (% UI)	Noise Margin (% VREF)	Overshoot / Undershoot Margin (% VREF)
DDR2 Component Write	40 ps (2.6%)	47 ps (3.2%)	98 mV (10.9%)	69 mV (7.6%)
DDR2 Component Read	0 ps (0%)	43 ps (2.9%)	6 mV (0.7%)	244 mV (17.2%)
DDR2 DIMM Write	218 ps (14.5%)	366 ps (24.5%)	112 mV (12.6%)	2 mV (0.3%)
DDR2 DIMM Read	39 ps (2.6%)	44 ps (2.9%)	90 mV (10.0%)	208 mV (23.1%)
QDRII Write	10 ps (0.6%)	107 ps (6.4%)	2 mV (0.3%)	85 mV (9.4%)
QDRII Read	106 ps (6.4%)	27 ps (1.6%)	386 mV (31.8%)	50 mV (5.6%)

Notes:

1. Unit Interval (UI): 1.5 ns for DDR2 and 1.67 ns for QDRII. VREF = 0.9V for DDR2 and QDRII.

There are varying degrees of correlation differences among the six test signals. In general, there is a good match between hardware measurements and the correlation simulation, except for some yet-to-be analyzed differences, for example, DDR2 DIMM Write DVW and QDRII read noise margin.

The remainder of this section summarizes the extrapolation results of the data bit interface for all six memory operations on the ML561 board. The measure of SI characteristics of each signal is determined by the worst-case extrapolation measurement from among the simulations with drivers at slow-weak and fast-strong corners. The values chosen between these two corner cases are:

- Minimum of DVW, noise margin, and overshoot/undershoot margin
- Maximum of ISI

Table 7-16 summarizes the extrapolated SI characteristics of all six test signals.

Table 7-16: **Summary of Worst-Case SI Characteristics**

Operation	ΔDVW (% UI)	ΔISI (% UI)	Noise Margin (% VREF)	Overshoot / Undershoot Margin (% VREF)
DDR2 Component Write	1.27 ns (84%)	127 ps (8.5%)	570 mV (63.3%)	685 mV (76.1%)
DDR2 Component Read	1.29 ns (86%)	178 ps (11.9%)	867 mV (96.3%)	349 mV (38.9%)
DDR2 DIMM Write	1.23 ns (82%)	117 ps (7.8%)	253 mV (28.1%)	981 mV (109.0%)
DDR2 DIMM Read	1.23 ns (82%)	224 ps (14.9%)	546 mV (60.7%)	989 mV (109.9%)
QDRII Write	1.38 ns (83%)	313 ps (18.8%)	687 mV (76.3%)	186 mV (20.7%)
QDRII Read	1.45 ns (87%)	85 ps (5.1%)	509 mV (56.5%)	1183 mV (131.5%)

Here are some observations about extrapolated SI characteristics among these test signals:

- The Data Valid Window (DVW) values already account for the degradation caused by ISI due to the PRBS6 test pattern. For timing analysis, two values need to be taken into consideration appropriately. For a PRBS6 test pattern, the worst-case DVW value (after discounting for ISI) is 82% UI for DDR2 DIMM operations.
- DDR2 write operations, as compared to QDRII write operations, have a lower noise margin due to the *always on* nature of the DCI termination on the DQ signal for the SSTL18_II_DCI I/O standard at the FPGA. Consequently, the overshoot/undershoot margin for DDR2 write operations is higher than for QDRII write operations. The DDR2 DIMM write operation has the lowest VIL noise margin of 107 mV.
- For read operations, the sum of VIH and VIL noise margins beyond the AC value specifications is at least 509 mV (56.6% of VREF). QDRII read operations have the lowest VIL noise margin of 201 mV.
- All six signals have positive values for overshoot and undershoot margins. QDRII write operations have the lowest undershoot margin value of 30 mV.

(For Table 5-1, page 48 through Table 5-5, page 49, the recommendations remain the same except for a clarification for DDR2 ODT as “75 ohm ODT”.)

How to Generate a User-Specific FPGA IBIS Model

The following steps indicate how to generate an IBIS model:

1. Under ISE, open your fully compiled project.
2. Go to the **Tcl Shell** tab, and issue an **`ibiswriter`** command as:

   ```
   ibiswriter -allmodels <your top level project design file>.ncd <name up to 24 lowercase characters>.ibs ;
   ```

   For example, **`ibiswriter -allmodels mem_interface_top.ncd ml561_fpga3_u34.ibs`**
3. Unzip the Virtex-5 FPGA IBIS models ZIP file located at the Xilinx Download Center (under the "Device Models" sidebar link). Then unzip the ZIP file containing the device package files and extract a package file for your device, for example, `ff1136_5vlx50t.pkg`. Place this file in the same directory as the FPGA IBIS file (for example, `ml561_fpga3_u34.ibs`).
4. Open the `ml561_fpga3_u34.ibs` file generated by *ibiswriter* in HyperLynx Visual IBIS Editor. Check the file for correctness by clicking on the check (✓) button in the top toolbar. Warnings are okay.
5. Open the `ff1136_5vlx50t.pkg` file using a text editor and locate the **`[Define Package Model]`** line. Copy and paste this line into the `ml561_fpga3_u34.ibs` file just above the line with the **`[Package]`** declaration. Edit the copied line to change **`[Define Package Model]`** to **`[Package Model]`**.
6. Again, check the file for correctness by clicking on the check (✓) button in the top toolbar. Multiple errors will appear. The package model file defines I/O definitions for all usable pins, but now *ibiswriter* only declares pins defined under the UCF. Thus errors are displayed for all the undefined pins, for example:

   ERROR - Pin 'AK9' found in Package_Model 'ff1136_xc5vlx50t_fga0106_dc' Pin_Numbers list not found in Component 'VIRTEX-5' Pin list.
7. Copy all these errors into a text file with a `.txt` file type.
   - Open this text file with Excel and provide the delimiter as (‘), which puts all the unused pin names in one column. Delete all other columns before and after the one with the pin names.
   - In column 2, fill in **`Unused_IO`** for all pins.
   - In column 3, fill in the name of one of the I/O standards defined under the [Model] section of the `ml561_fpga3_u34.ibs` file, for example, LVCMOS25_S_12. Choose a name that is not an *output only* standard, because it might conflict with other outputs in the same bank.
   - Right-justify the indentation for all three columns and make sure that each column is wider by a few spaces than the longest string in that column.
   - Save this file with the Save As command in Excel using the Formatted Text (space delimited) (`*.prn`) option to create a text file with text columns separated by spaces. (The IBIS checker gives a warning if the `.ibs` file contains tabs.)
8. Open the `.prn` file with a text editor and copy all these lines to the `.ibs` file at the end of the **`[Pin]`** definitions section (just above the **`[Diff Pin]`** declarations).
9. Check (✓) the `.ibs` file again. There should not be any errors. Again, warnings are okay.
10. The result is an accurate custom-made IBIS model of a Virtex-5 device specific to your design.

XILINX®

Appendix A

FPGA Pinouts

This appendix provides the pinouts for the three FPGAs on the Virtex-5 FPGA ML561 Development Board. The toolkit CD shipped with every ML561 contains sample UCFs for each memory interface. These UCFs are for pinout reference only and do not include other constraints, like I/O standards.

FPGA #1 Pinout

Table A-1 lists the connections for FPGA #1 (U7).

Table A-1: **FPGA #1 Pinout**

Signal Name	Pin	Signal Name	Pin
DDR400 Component Interface			
DDR1_A0	M32	DDR1_CK1_N	AJ34
DDR1_A1	L33	DDR1_CK1_P	AH34
DDR1_A10	E33	DDR1_CK2_N	AE34
DDR1_A11	E32	DDR1_CK2_P	AF34
DDR1_A12	E34	DDR1_CKE	AC34
DDR1_A13	F33	DDR1_LB_BK11	N32
DDR1_A2	K32	DDR1_LB_BK11	P32
DDR1_A3	K34	DDR1_LB_BK13	AJ32
DDR1_A4	L34	DDR1_LB_BK13	AK32
DDR1_A5	J34	DDR1_RAS_N	AB32
DDR1_A6	H34	DDR1_WE_N	AD34
DDR1_A7	H33	DDR1_DM_BY0	AG32
DDR1_A8	F34	DDR1_DM_BY1	Y32
DDR1_A9	G33	DDR1_DM_BY2	P34
DDR1_BA0	AK33	DDR1_DM_BY3	G32
DDR1_BA1	AK34	DDR1_DQ_BY0_B0	AP32
DDR1_BY0_1_CS_N	AB33	DDR1_DQ_BY0_B1	AN32
DDR1_BY2_3_CS_N	AC33	DDR1_DQ_BY0_B2	AN33
DDR1_CAS_N	AC32	DDR1_DQ_BY0_B3	AN34

Table A-1: **FPGA #1 Pinout *(Continued)***

Signal Name	Pin	Signal Name	Pin
DDR400 Component Interface (cont.)			
DDR1_DQ_BY0_B4	AM32	DDR1_DQ_BY2_B4	R32
DDR1_DQ_BY0_B5	AM33	DDR1_DQ_BY2_B5	R33
DDR1_DQ_BY0_B6	AL33	DDR1_DQ_BY2_B6	R34
DDR1_DQ_BY0_B7	AL34	DDR1_DQ_BY2_B7	T33
DDR1_DQ_BY1_B0	Y34	DDR1_DQ_BY3_B0	D34
DDR1_DQ_BY1_B1	AA34	DDR1_DQ_BY3_B1	C34
DDR1_DQ_BY1_B2	AA33	DDR1_DQ_BY3_B2	D32
DDR1_DQ_BY1_B3	Y33	DDR1_DQ_BY3_B3	C32
DDR1_DQ_BY1_B4	V34	DDR1_DQ_BY3_B4	C33
DDR1_DQ_BY1_B5	W34	DDR1_DQ_BY3_B5	B33
DDR1_DQ_BY1_B6	V33	DDR1_DQ_BY3_B6	A33
DDR1_DQ_BY1_B7	V32	DDR1_DQ_BY3_B7	B32
DDR1_DQ_BY2_B0	U31	DDR1_DQS_BY0_P	AD32
DDR1_DQ_BY2_B1	U32	DDR1_DQS_BY1_P	AF33
DDR1_DQ_BY2_B2	T34	DDR1_DQS_BY2_P	K33
DDR1_DQ_BY2_B3	U33	DDR1_DQS_BY3_P	J32
DDR2 Component Interface			
DDR2_A0	K12	DDR2_CAS_N	J14
DDR2_A1	K13	DDR2_CK0_N	K19
DDR2_A10	G22	DDR2_CK0_P	L19
DDR2_A11	J15	DDR2_CK1_N	J19
DDR2_A12	K16	DDR2_CK1_P	K18
DDR2_A2	H23	DDR2_CKE	K17
DDR2_A3	G23	DDR2_CS0_N	H20
DDR2_A4	H12	DDR2_CS1_N	H19
DDR2_A5	J12	DDR2_LB_BK15	T28
DDR2_A6	K22	DDR2_LB_BK15	T29
DDR2_A7	K23	DDR2_LB_BK19	M28
DDR2_A8	K14	DDR2_LB_BK19	N28
DDR2_A9	L14	DDR2_ODT0	H18
DDR2_BA0	K21	DDR2_ODT1	H17
DDR2_BA1	J22	DDR2_RAS_N	H13

Table A-1: **FPGA #1 Pinout *(Continued)***

Signal Name	Pin	Signal Name	Pin
DDR2 Component Interface (cont.)			
DDR2_WE_N	J21	DDR2_DQ_BY2_B2	N25
DDR2_DM_BY0	U30	DDR2_DQ_BY2_B3	P25
DDR2_DM_BY1	L29	DDR2_DQ_BY2_B4	P24
DDR2_DM_BY2	K27	DDR2_DQ_BY2_B5	N24
DDR2_DM_BY3	J27	DDR2_DQ_BY2_B6	P27
DDR2_DQ_BY0_B0	T25	DDR2_DQ_BY2_B7	P26
DDR2_DQ_BY0_B1	U25	DDR2_DQ_BY3_B0	M26
DDR2_DQ_BY0_B2	T26	DDR2_DQ_BY3_B1	M25
DDR2_DQ_BY0_B3	U26	DDR2_DQ_BY3_B2	J25
DDR2_DQ_BY0_B4	R27	DDR2_DQ_BY3_B3	J24
DDR2_DQ_BY0_B5	R26	DDR2_DQ_BY3_B4	L26
DDR2_DQ_BY0_B6	U28	DDR2_DQ_BY3_B5	L25
DDR2_DQ_BY0_B7	U27	DDR2_DQ_BY3_B6	L24
DDR2_DQ_BY1_B0	E31	DDR2_DQ_BY3_B7	K24
DDR2_DQ_BY1_B1	F31	DDR2_DQS_BY0_N	N30
DDR2_DQ_BY1_B2	J29	DDR2_DQS_BY0_P	M31
DDR2_DQ_BY1_B3	H29	DDR2_DQS_BY1_N	P29
DDR2_DQ_BY1_B4	F30	DDR2_DQS_BY1_P	N29
DDR2_DQ_BY1_B5	G30	DDR2_DQS_BY2_N	E27
DDR2_DQ_BY1_B6	F29	DDR2_DQS_BY2_P	E26
DDR2_DQ_BY1_B7	E29	DDR2_DQS_BY3_N	H27
DDR2_DQ_BY2_B0	T24	DDR2_DQS_BY3_P	G27
DDR2_DQ_BY2_B1 23	R24		
FPGA #1 Clock and Reset Signals			
CLK_TO_FPGA1_MGT_116_N	H3	DIRECT_CLK_TO_FPGA1_P	AG22
CLK_TO_FPGA1_MGT_116_P	H4	EXT_CLK_TO_FPGA1_N	AG13
CLK_TO_FPGA1_MGT_118_N	AF3	EXT_CLK_TO_FPGA1_P	AH12
CLK_TO_FPGA1_MGT_118_P	AF4	FPGA1_LOW_FREQ_CLK	AH20
DIRECT_CLK_TO_FPGA1_N	AH22	FPGA1_RESET_N	AH14

Table A-1: **FPGA #1 Pinout *(Continued)***

Signal Name	Pin	Signal Name	Pin
FPGA #1 MII Link Interface			
FPGA2_TO_FPGA1_MII_TX_CLK	J10	FPGA3_TO_FPGA1_MII_TX_CLK	D10
FPGA2_TO_FPGA1_MII_TX_DATA0	C13	FPGA3_TO_FPGA1_MII_TX_DATA0	H10
FPGA2_TO_FPGA1_MII_TX_DATA1	B13	FPGA3_TO_FPGA1_MII_TX_DATA1	C12
FPGA2_TO_FPGA1_MII_TX_DATA2	K9	FPGA3_TO_FPGA1_MII_TX_DATA2	D12
FPGA2_TO_FPGA1_MII_TX_DATA3	K8	FPGA3_TO_FPGA1_MII_TX_DATA3	J11
FPGA2_TO_FPGA1_MII_TX_EN	L11	FPGA3_TO_FPGA1_MII_TX_EN	A13
FPGA2_TO_FPGA1_MII_TX_ERR	L10	FPGA3_TO_FPGA1_MII_TX_ERR	H9
FPGA2_TO_FPGA1_MII_TX_SPARE	J9	FPGA3_TO_FPGA1_MII_TX_SPARE	K11
FPGA #1 Configuration Signals			
FPGA_INIT	N14	FPGA1_D_IN	P15
FPGA_PROGB	M22	FPGA1_DONE	M15
FPGA_TMS	AC14	FPGA1_DOUT_B	AD15
FPGA_VBATT	L23	FPGA1_HSWAPEN	M23
FPGA1_CCLK	N15	FPGA1_TCK	AB15
FPGA1_CNFG_M0	AD21	FPGA1_TDI_IN	AC15
FPGA1_CNFG_M1	AC22	FPGA1_TDO 15	AD14
FPGA1_CNFG_M2	AD22		
FPGA #1 Test and Debug Signals			
FPGA1_DIP0	AG18	FPGA1_TEST_HDR_BY0_B6	E8
FPGA1_DIP1	AG15	FPGA1_TEST_HDR_BY0_B7	E9
FPGA1_DIP2	AH15	FPGA1_TEST_HDR_BY1_B0	E12
FPGA1_DIP3	AG20	FPGA1_TEST_HDR_BY1_B1	L9
FPGA1_SPYHOLE_BK21	AF26	FPGA1_TEST_HDR_BY1_B2	M10
FPGA1_TEST_HDR_BY0_B0	H8	FPGA1_TEST_HDR_BY1_B3	E11
FPGA1_TEST_HDR_BY0_B1	G8	FPGA1_TEST_HDR_BY1_B4	F11
FPGA1_TEST_HDR_BY0_B2	G10	FPGA1_TEST_HDR_BY1_B5	L8
FPGA1_TEST_HDR_BY0_B3	F10	FPGA1_TEST_HDR_BY1_B6	M8
FPGA1_TEST_HDR_BY0_B4	F8	FPGA1_TEST_HDR_BY1_B7	G12
FPGA1_TEST_HDR_BY0_B5	F9		

Table A-1: **FPGA #1 Pinout *(Continued)***

Signal Name	Pin	Signal Name	Pin
FPGA #1 Test Display Signals			
FPGA1_7SEG_0_N	AG17	FPGA1_7SEG_6_N	AF19
FPGA1_7SEG_1_N	AH18	FPGA1_7SEG_DP_N	AG21
FPGA1_7SEG_2_N	AE18	FPGA1_LED0	AD19
FPGA1_7SEG_3_N	AF18	FPGA1_LED1	AE19
FPGA1_7SEG_4_N	AG16	FPGA1_LED2	AE17
FPGA1_7SEG_5_N	AH17	FPGA1_LED3	AF16
FPGA #1 External Interfaces			
FPGA1_LCD_BL_ON	M6	FPGA1_LCD_E	M5
FPGA1_LCD_CSB	M7	FPGA1_LCD_R_WB	N8
FPGA1_LCD_DB0	K6	FPGA1_LCD_RESET_N	L6
FPGA1_LCD_DB1	K7	FPGA1_LCD_RS	N7
FPGA1_LCD_DB2	P6	FPGA1_RS232_CTS	R11
FPGA1_LCD_DB3	P7	FPGA1_RS232_RTS	G5
FPGA1_LCD_DB4	L5	FPGA1_RS232_RX	P9
FPGA1_LCD_DB5	L4	FPGA1_RS232_TX	H5
FPGA1_LCD_DB6	P5	FPGA1_TXN0_BK124	B9
FPGA1_LCD_DB7	N5	FPGA1_TXP0_BK124	B10
FPGA1_USB_CTS_N	G6	FPGA1_USB_RTS_N	G7
FPGA1_USB_DSR_N	E6	FPGA1_USB_RX	T9
FPGA1_USB_DTR_N	E7	FPGA1_USB_SUSPEND	T11
FPGA1_USB_RST_N	T10	FPGA1_USB_TX	U10
FPGA #1 Voltage Margining Interface			
VMARGIN_DN_3V3_N	AE22	VMARGIN_UP_3V3_N	AE23
VMARGIN_DN_HSTL_N	AE13	VMARGIN_UP_HSTL_N	AE12
VMARGIN_DN_SSTL18_N	AF13	VMARGIN_UP_SSTL18_N	AG12
VMARGIN_DN_SSTL2_N	AF23	VMARGIN_UP_SSTL2_N	AG23
VMARGIN_DN_VCC1V0_N	AF20	VMARGIN_UP_VCC1V0_N	AF21
VMARGIN_DN_VCC2V5_N	AE14	VMARGIN_UP_VCC2V5_N	AF14

FPGA #2 Pinout

Table A-2 lists the connections for FPGA #2 (U5).

Table A-2: **FPGA #2 Pinout**

Signal Name	Pin	Signal Name	Pin
DDR2 DIMM Deep Interface			
DDR2_DIMM_A0	AG30	DDR2_DIMM1_CK0_N	M26
DDR2_DIMM_A1	AH29	DDR2_DIMM1_CK0_P	M25
DDR2_DIMM_A10	AF31	DDR2_DIMM1_CK1_N	J25
DDR2_DIMM_A11	AC29	DDR2_DIMM1_CK1_P	J24
DDR2_DIMM_A12	AD30	DDR2_DIMM1_CK2_N	L26
DDR2_DIMM_A13	AA30	DDR2_DIMM1_CK2_P	L25
DDR2_DIMM_A14	AA29	DDR2_DIMM1_CKE0	G28
DDR2_DIMM_A15	AC30	DDR2_DIMM1_CKE1	H28
DDR2_DIMM_A2	AH30	DDR2_DIMM1_CS0_N	V27
DDR2_DIMM_A3	AJ30	DDR2_DIMM1_CS1_N	V28
DDR2_DIMM_A4	AF30	DDR2_DIMM1_ODT0	H24
DDR2_DIMM_A5	AF29	DDR2_DIMM1_ODT1	H25
DDR2_DIMM_A6	AK31	DDR2_DIMM2_CK0_N	AF26
DDR2_DIMM_A7	AJ31	DDR2_DIMM2_CK0_P	AF25
DDR2_DIMM_A8	AD29	DDR2_DIMM2_CK1_N	AG25
DDR2_DIMM_A9	AE29	DDR2_DIMM2_CK1_P	AF24
DDR2_DIMM_BA0	AB30	DDR2_DIMM2_CK2_N	AJ26
DDR2_DIMM_BA1	AA31	DDR2_DIMM2_CK2_P	AH27
DDR2_DIMM_BA2	AB31	DDR2_DIMM2_CKE0	AE24
DDR2_DIMM_CAS_N	V29	DDR2_DIMM2_CKE1	AD24
DDR2_DIMM_LB_BK11_IN	P32	DDR2_DIMM2_CS0_N	W27
DDR2_DIMM_LB_BK11_OUT	H33	DDR2_DIMM2_CS1_N	Y27
DDR2_DIMM_LB_BK13_IN	AJ32	DDR2_DIMM2_ODT0	AE26
DDR2_DIMM_LB_BK13_OUT	AK32	DDR2_DIMM2_ODT1	AE27
DDR2_DIMM_LB_BK15_IN	T28	DDR2_DIMM3_CK0_N	AA24
DDR2_DIMM_LB_BK15_OUT	T29	DDR2_DIMM3_CK0_P	Y24
DDR2_DIMM_RAS_N	Y28	DDR2_DIMM3_CK1_N	AC27
DDR2_DIMM_RESET_N	Y29	DDR2_DIMM3_CK1_P	AB27
DDR2_DIMM_WE_N	W29	DDR2_DIMM3_CK2_N	AA26

Table A-2: **FPGA #2 Pinout *(Continued)***

Signal Name	Pin	Signal Name	Pin
DDR2 DIMM Deep Interface (cont.)			
DDR2_DIMM3_CK2_P	AA25	DDR2_DIMM_DQ_BY0_B4	R27
DDR2_DIMM3_CKE0	AE28	DDR2_DIMM_DQ_BY0_B5	R26
DDR2_DIMM3_CKE1	AH28	DDR2_DIMM_DQ_BY0_B6	U28
DDR2_DIMM3_CS0_N	W25	DDR2_DIMM_DQ_BY0_B7	U27
DDR2_DIMM3_CS1_N	V25	DDR2_DIMM_DQ_BY1_B0	N29
DDR2_DIMM3_ODT0	AB26	DDR2_DIMM_DQ_BY1_B1	M30
DDR2_DIMM3_ODT1	AB25	DDR2_DIMM_DQ_BY1_B2	L30
DDR2_DIMM4_CK0_N	AK9	DDR2_DIMM_DQ_BY1_B3	J31
DDR2_DIMM4_CK0_P	AK8	DDR2_DIMM_DQ_BY1_B4	J30
DDR2_DIMM4_CK1_N	AJ11	DDR2_DIMM_DQ_BY1_B5	G31
DDR2_DIMM4_CK1_P	AK11	DDR2_DIMM_DQ_BY1_B6	H30
DDR2_DIMM4_CK2_N	AD11	DDR2_DIMM_DQ_BY1_B7	L29
DDR2_DIMM4_CK2_P	AD10	DDR2_DIMM_DQ_BY2_B0	E31
DDR2_DIMM4_CKE0	AG11	DDR2_DIMM_DQ_BY2_B1	F31
DDR2_DIMM4_CKE1	AG10	DDR2_DIMM_DQ_BY2_B2	J29
DDR2_DIMM4_CS0_N	W26	DDR2_DIMM_DQ_BY2_B3	H29
DDR2_DIMM4_CS1_N	Y26	DDR2_DIMM_DQ_BY2_B4	F30
DDR2_DIMM4_ODT0	AE11	DDR2_DIMM_DQ_BY2_B5	G30
DDR2_DIMM4_ODT1	AF11	DDR2_DIMM_DQ_BY2_B6	F29
DDR2_DIMM_DM_BY0	U30	DDR2_DIMM_DQ_BY2_B7	E29
DDR2_DIMM_DM_BY1	R31	DDR2_DIMM_DQ_BY3_B0	J32
DDR2_DIMM_DM_BY2	T31	DDR2_DIMM_DQ_BY3_B1	F34
DDR2_DIMM_DM_BY3	L33	DDR2_DIMM_DQ_BY3_B2	G33
DDR2_DIMM_DM_BY4	AK34	DDR2_DIMM_DQ_BY3_B3	E33
DDR2_DIMM_DM_BY5	AG32	DDR2_DIMM_DQ_BY3_B4	E32
DDR2_DIMM_DM_BY6	P34	DDR2_DIMM_DQ_BY3_B5	E34
DDR2_DIMM_DM_BY7	AK33	DDR2_DIMM_DQ_BY3_B6	F33
DDR2_DIMM_DM_CB0_7	M32	DDR2_DIMM_DQ_BY3_B7	G32
DDR2_DIMM_DQ_BY0_B0	T25	DDR2_DIMM_DQ_BY4_B0	Y34
DDR2_DIMM_DQ_BY0_B1	U25	DDR2_DIMM_DQ_BY4_B1	AA34
DDR2_DIMM_DQ_BY0_B2	T26	DDR2_DIMM_DQ_BY4_B2	AA33
DDR2_DIMM_DQ_BY0_B3	U26	DDR2_DIMM_DQ_BY4_B3	Y33

Table A-2: **FPGA #2 Pinout *(Continued)***

Signal Name	Pin	Signal Name	Pin
DDR2 DIMM Deep Interface (cont.)			
DDR2_DIMM_DQ_BY4_B4	V34	DDR2_DIMM_DQ_BY7_B7	Y32
DDR2_DIMM_DQ_BY4_B5	W34	DDR2_DIMM_DQ_CB0_7_B0	D34
DDR2_DIMM_DQ_BY4_B6	V33	DDR2_DIMM_DQ_CB0_7_B1	C34
DDR2_DIMM_DQ_BY4_B7	V32	DDR2_DIMM_DQ_CB0_7_B2	D32
DDR2_DIMM_DQ_BY5_B0	AP32	DDR2_DIMM_DQ_CB0_7_B3	C32
DDR2_DIMM_DQ_BY5_B1	AN32	DDR2_DIMM_DQ_CB0_7_B4	C33
DDR2_DIMM_DQ_BY5_B2	AN33	DDR2_DIMM_DQ_CB0_7_B5	B33
DDR2_DIMM_DQ_BY5_B3	AN34	DDR2_DIMM_DQ_CB0_7_B6	A33
DDR2_DIMM_DQ_BY5_B4	AM32	DDR2_DIMM_DQ_CB0_7_B7	B32
DDR2_DIMM_DQ_BY5_B5	AM33	DDR2_DIMM_DQS_BY0_L_N	N30
DDR2_DIMM_DQ_BY5_B6	AL33	DDR2_DIMM_DQS_BY0_L_P	M31
DDR2_DIMM_DQ_BY5_B7	AL34	DDR2_DIMM_DQS_BY1_L_N	P30
DDR2_DIMM_DQ_BY6_B0	U31	DDR2_DIMM_DQS_BY1_L_P	P31
DDR2_DIMM_DQ_BY6_B1	U32	DDR2_DIMM_DQS_BY2_L_N	L31
DDR2_DIMM_DQ_BY6_B2	T34	DDR2_DIMM_DQS_BY2_L_P	K31
DDR2_DIMM_DQ_BY6_B3	U33	DDR2_DIMM_DQS_BY3_L_N	J34
DDR2_DIMM_DQ_BY6_B4	R32	DDR2_DIMM_DQS_BY3_L_P	H34
DDR2_DIMM_DQ_BY6_B5	R33	DDR2_DIMM_DQS_BY4_L_N	AE34
DDR2_DIMM_DQ_BY6_B6	R34	DDR2_DIMM_DQS_BY4_L_P	AF34
DDR2_DIMM_DQ_BY6_B7	T33	DDR2_DIMM_DQS_BY5_L_N	AE32
DDR2_DIMM_DQ_BY7_B0	AF33	DDR2_DIMM_DQS_BY5_L_P	AD32
DDR2_DIMM_DQ_BY7_B1	AB33	DDR2_DIMM_DQS_BY6_L_N	K32
DDR2_DIMM_DQ_BY7_B2	AC33	DDR2_DIMM_DQS_BY6_L_P	K33
DDR2_DIMM_DQ_BY7_B3	AB32	DDR2_DIMM_DQS_BY7_L_N	AJ34
DDR2_DIMM_DQ_BY7_B4	AC32	DDR2_DIMM_DQS_BY7_L_P	AH34
DDR2_DIMM_DQ_BY7_B5	AD34	DDR2_DIMM_DQS_CB0_7_L_N	K34
DDR2_DIMM_DQ_BY7_B6	AC34	DDR2_DIMM_DQS_CB0_7_L_P	L34
DDR2 DIMM Wide Interface			
DDR2_DIMM5_CK0_N	AM13	DDR2_DIMM5_CK2_N	AP14
DDR2_DIMM5_CK0_P	AN13	DDR2_DIMM5_CK2_P	AN14
DDR2_DIMM5_CK1_N	AA10	DDR2_DIMM5_CKE0	AC10
DDR2_DIMM5_CK1_P	AB10	DDR2_DIMM5_CKE1	AM11

Table A-2: **FPGA #2 Pinout *(Continued)***

Signal Name	Pin	Signal Name	Pin
DDR2 DIMM Wide Interface (cont.)			
DDR2_DIMM5_CS0_N	V24	DDR2_DIMM_DQ_BY11_B5	G6
DDR2_DIMM5_CS1_N	W24	DDR2_DIMM_DQ_BY11_B6	T11
DDR2_DIMM5_ODT0	AA9	DDR2_DIMM_DQ_BY11_B7	T10
DDR2_DIMM5_ODT1	AA8	DDR2_DIMM_DQ_BY12_B0	J6
DDR2_DIMM_LB_BK12	F5	DDR2_DIMM_DQ_BY12_B1	T6
DDR2_DIMM_LB_BK12	F6	DDR2_DIMM_DQ_BY12_B2	R6
DDR2_DIMM_LB_BK18	W10	DDR2_DIMM_DQ_BY12_B3	K6
DDR2_DIMM_LB_BK18	Y6	DDR2_DIMM_DQ_BY12_B4	K7
DDR2_DIMM_LB_BK20	E11	DDR2_DIMM_DQ_BY12_B5	P6
DDR2_DIMM_LB_BK20	F11	DDR2_DIMM_DQ_BY12_B6	P7
DDR2_DIMM_DM_BY10	G11	DDR2_DIMM_DQ_BY12_B7	L4
DDR2_DIMM_DM_BY11	R11	DDR2_DIMM_DQ_BY13_B0	AD7
DDR2_DIMM_DM_BY12	G5	DDR2_DIMM_DQ_BY13_B1	AC7
DDR2_DIMM_DM_BY13	Y11	DDR2_DIMM_DQ_BY13_B2	AB5
DDR2_DIMM_DM_BY14	AH7	DDR2_DIMM_DQ_BY13_B3	AA5
DDR2_DIMM_DM_BY15	W11	DDR2_DIMM_DQ_BY13_B4	AB7
DDR2_DIMM_DM_BY8	M8	DDR2_DIMM_DQ_BY13_B5	AB6
DDR2_DIMM_DM_BY9	G12	DDR2_DIMM_DQ_BY13_B6	AC5
DDR2_DIMM_DM_CB8_15	H5	DDR2_DIMM_DQ_BY13_B7	AC4
DDR2_DIMM_DQ_BY10_B0	H8	DDR2_DIMM_DQ_BY14_B0	V9
DDR2_DIMM_DQ_BY10_B1	G8	DDR2_DIMM_DQ_BY14_B1	V10
DDR2_DIMM_DQ_BY10_B2	G10	DDR2_DIMM_DQ_BY14_B2	AK6
DDR2_DIMM_DQ_BY10_B3	F10	DDR2_DIMM_DQ_BY14_B3	AK7
DDR2_DIMM_DQ_BY10_B4	F8	DDR2_DIMM_DQ_BY14_B4	U8
DDR2_DIMM_DQ_BY10_B5	F9	DDR2_DIMM_DQ_BY14_B5	V8
DDR2_DIMM_DQ_BY10_B6	E8	DDR2_DIMM_DQ_BY14_B6	AJ6
DDR2_DIMM_DQ_BY10_B7	E9	DDR2_DIMM_DQ_BY14_B7	AJ7
DDR2_DIMM_DQ_BY11_B0	E7	DDR2_DIMM_DQ_BY15_B0	W6
DDR2_DIMM_DQ_BY11_B1	E6	DDR2_DIMM_DQ_BY15_B1	AE6
DDR2_DIMM_DQ_BY11_B2	U10	DDR2_DIMM_DQ_BY15_B2	AD6
DDR2_DIMM_DQ_BY11_B3	T9	DDR2_DIMM_DQ_BY15_B3	Y7
DDR2_DIMM_DQ_BY11_B4	G7	DDR2_DIMM_DQ_BY15_B4	AA6

Table A-2: **FPGA #2 Pinout *(Continued)***

Signal Name	Pin	Signal Name	Pin
DDR2 DIMM Wide Interface (cont.)			
DDR2_DIMM_DQ_BY15_B5	AD5	DDR2_DIMM_DQ_CB8_15_B4	N7
DDR2_DIMM_DQ_BY15_B6	AD4	DDR2_DIMM_DQ_CB8_15_B5	N8
DDR2_DIMM_DQ_BY15_B7	Y8	DDR2_DIMM_DQ_CB8_15_B6	M5
DDR2_DIMM_DQ_BY8_B0	G13	DDR2_DIMM_DQ_CB8_15_B7	M6
DDR2_DIMM_DQ_BY8_B1	F13	DDR2_DIMM_DQS_BY10_L_N	J9
DDR2_DIMM_DQ_BY8_B2	N9	DDR2_DIMM_DQS_BY10_L_P	J10
DDR2_DIMM_DQ_BY8_B3	N10	DDR2_DIMM_DQS_BY11_L_N	J7
DDR2_DIMM_DQ_BY8_B4	E13	DDR2_DIMM_DQS_BY11_L_P	H7
DDR2_DIMM_DQ_BY8_B5	E12	DDR2_DIMM_DQS_BY12_L_N	U7
DDR2_DIMM_DQ_BY8_B6	L9	DDR2_DIMM_DQS_BY12_L_P	T8
DDR2_DIMM_DQ_BY8_B7	M10	DDR2_DIMM_DQS_BY13_L_N	AF6
DDR2_DIMM_DQ_BY9_B0	A13	DDR2_DIMM_DQS_BY13_L_P	AE7
DDR2_DIMM_DQ_BY9_B1	H9	DDR2_DIMM_DQS_BY14_L_N	V7
DDR2_DIMM_DQ_BY9_B2	H10	DDR2_DIMM_DQS_BY14_L_P	W7
DDR2_DIMM_DQ_BY9_B3	C12	DDR2_DIMM_DQS_BY15_L_N	AF5
DDR2_DIMM_DQ_BY9_B4	D12	DDR2_DIMM_DQS_BY15_L_P	AG5
DDR2_DIMM_DQ_BY9_B5	J11	DDR2_DIMM_DQS_BY8_L_N	C13
DDR2_DIMM_DQ_BY9_B6	K11	DDR2_DIMM_DQS_BY8_L_P	B13
DDR2_DIMM_DQ_BY9_B7	D11	DDR2_DIMM_DQS_BY9_L_N	K9
DDR2_DIMM_DQ_CB8_15_B0 20	P5	DDR2_DIMM_DQS_BY9_L_P	K8
DDR2_DIMM_DQ_CB8_15_B1	N5	DDR2_DIMM_DQS_CB8_15_L_N	R8
DDR2_DIMM_DQ_CB8_15_B2	L6	DDR2_DIMM_DQS_CB8_15_L_P	R7
DDR2_DIMM_DQ_CB8_15_B3	M7		
DDR2 DIMM Miscellaneous Signals			
DDR2_DIMM1_CNTL_PAR	G27	DDR2_DIMM3_CNTL_PAR	AA28
DDR2_DIMM1_CNTL_PAR_ERR	H27	DDR2_DIMM3_CNTL_PAR_ERR	AG28
DDR2_DIMM1_NC_019	K24	DDR2_DIMM3_NC_019	AK29
DDR2_DIMM1_NC_102	L24	DDR2_DIMM3_NC_102	AJ29
DDR2_DIMM2_CNTL_PAR	AD26	DDR2_DIMM4_CNTL_PAR	AG8
DDR2_DIMM2_CNTL_PAR_ERR	AD25	DDR2_DIMM4_CNTL_PAR_ERR	AH8
DDR2_DIMM2_NC_019	AK28	DDR2_DIMM4_NC_019	AL10
DDR2_DIMM2_NC_102	AK27	DDR2_DIMM4_NC_102	AE8

Table A-2: **FPGA #2 Pinout *(Continued)***

Signal Name	Pin	Signal Name	Pin
DDR2 DIMM Miscellaneous Signals (cont.)			
DDR2_DIMM5_CNTL_PAR	AB8	DDR2_DIMM2_SA2	N24
DDR2_DIMM5_CNTL_PAR_ERR	AM12	DDR2_DIMM3_SA0	P27
DDR2_DIMM5_NC_019	AC9	DDR2_DIMM3_SA1	P26
DDR2_DIMM5_NC_102	AL11	DDR2_DIMM3_SA2	N28
DDR2_DIMM_SCL	W31	DDR2_DIMM4_SA0	K27
DDR2_DIMM_SDA	Y31	DDR2_DIMM4_SA1	L28
DDR2_DIMM1_SA0	T24	DDR2_DIMM4_SA2	K28
DDR2_DIMM1_SA1	R24	DDR2_DIMM5_SA0	E26
DDR2_DIMM1_SA2	N25	DDR2_DIMM5_SA1	F28
DDR2_DIMM2_SA0	P25	DDR2_DIMM5_SA2	E28
DDR2_DIMM2_SA1	P24		
FPGA #2 Clock and Reset Signals			
CLK_TO_FPGA2_MGT_N	H3	EXT_CLK_TO_FPGA2_N	AG13
CLK_TO_FPGA2_MGT_P	H4	EXT_CLK_TO_FPGA2_P	AH12
DIRECT_CLK_TO_FPGA2_N	AH22	FPGA2_LOW_FREQ_CLK	AH20
DIRECT_CLK_TO_FPGA2_P	AG22	FPGA2_RESET_N_IN	AH14
FPGA #2 MII Link Interface			
FPGA1_TO_FPGA2_MII_TX_CLK	AE14	FPGA1_TO_FPGA2_MII_TX_DATA3	AF20
FPGA1_TO_FPGA2_MII_TX_DATA0	AE16	FPGA1_TO_FPGA2_MII_TX_EN	AD20
FPGA1_TO_FPGA2_MII_TX_DATA1	AF15	FPGA1_TO_FPGA2_MII_TX_ERR	AE21
FPGA1_TO_FPGA2_MII_TX_DATA2	AF21	FPGA1_TO_FPGA2_MII_TX_SPARE	AF14
FPGA #2 Configuration Signals			
FPGA_INIT	N14	FPGA2_D_IN	P15
FPGA_PROGB	M22	FPGA2_DONE	M15
FPGA_TMS	AC14	FPGA2_DOUT_B	AD15
FPGA_VBATT	L23	FPGA2_HSWAPEN	M23
FPGA2_CCLK	N15	FPGA2_TCK	AB15
FPGA2_CNFG_M0	AD21	FPGA2_TDI_IN	AC15
FPGA2_CNFG_M1	AC22	FPGA2_TDO	AD14
FPGA2_CNFG_M2	AD22		

Table A-2: **FPGA #2 Pinout *(Continued)***

Signal Name	Pin	Signal Name	Pin
FPGA #2 Test and Debug Signals			
FPGA2_DIP0	AG18	FPGA2_SOFTTOUCH_BY1_B7	H17
FPGA2_DIP1	AG15	FPGA2_SPYHOLE_BK15	P29
FPGA2_DIP2	AH15	FPGA2_SPYHOLE_BK18	W9
FPGA2_DIP3	AG20	FPGA2_TEST_HDR_BY0_B0	AE23
FPGA2_SOFTTOUCH_BY0_B0	H20	FPGA2_TEST_HDR_BY0_B1	AE22
FPGA2_SOFTTOUCH_BY0_B1	H19	FPGA2_TEST_HDR_BY0_B2	AG12
FPGA2_SOFTTOUCH_BY0_B2	H13	FPGA2_TEST_HDR_BY0_B3	AF13
FPGA2_SOFTTOUCH_BY0_B3	J14	FPGA2_TEST_HDR_BY0_B4	AG23
FPGA2_SOFTTOUCH_BY0_B4	J21	FPGA2_TEST_HDR_BY0_B5	AF23
FPGA2_SOFTTOUCH_BY0_B5	J20	FPGA2_TEST_HDR_BY0_B6	AE12
FPGA2_SOFTTOUCH_BY0_B6	H15	FPGA2_TEST_HDR_BY0_B7	AE13
FPGA2_SOFTTOUCH_BY0_B7	H14	FPGA2_TEST_HDR_BY1_B0	K12
FPGA2_SOFTTOUCH_BY1_B0	J19	FPGA2_TEST_HDR_BY1_B1	K13
FPGA2_SOFTTOUCH_BY1_B1	K18	FPGA2_TEST_HDR_BY1_B2	H23
FPGA2_SOFTTOUCH_BY1_B2	G16	FPGA2_TEST_HDR_BY1_B3	G23
FPGA2_SOFTTOUCH_BY1_B3	G15	FPGA2_TEST_HDR_BY1_B4	H12
FPGA2_SOFTTOUCH_BY1_B4	L18	FPGA2_TEST_HDR_BY1_B5	J12
FPGA2_SOFTTOUCH_BY1_B5	K17	FPGA2_TEST_HDR_BY1_B6	K22
FPGA2_SOFTTOUCH_BY1_B6	H18	FPGA2_TEST_HDR_BY1_B7	K23
FPGA #2 Test Display Signals			
FPGA2_7SEG_0_N	AG17	FPGA2_7SEG_6_N	AF19
FPGA2_7SEG_1_N	AH18	FPGA2_7SEG_DP_N	AG21
FPGA2_7SEG_2_N	AE18	FPGA2_LED0	AD19
FPGA2_7SEG_3_N	AF18	FPGA2_LED1	AE19
FPGA2_7SEG_4_N	AG16	FPGA2_LED2	AE17
FPGA2_7SEG_5_N	AH17	FPGA2_LED3	AF16
FPGA #2 External Interfaces			
FPGA2_116_TX0_N	G2	FPGA2_120_RX1_P	D1
FPGA2_116_TX0_P	F2	FPGA2_124_TX0_N	B10
FPGA2_120_RX0_N	A2	FPGA2_124_TX0_P	B9
FPGA2_120_RX0_P	A3	FPGA2_124_TX1_N	B6
FPGA2_120_RX1_N	C1	FPGA2_124_TX1_P	B5

Table A-2: **FPGA #2 Pinout *(Continued)***

Signal Name	Pin		Signal Name	Pin
FPGA #2 External Interfaces (cont.)				
FPGA2_TXN0_BK120	B3		FPGA2_USB_CTS_N	L15
FPGA2_TXN1_BK120	D2		FPGA2_USB_DSR_N	K16
FPGA2_TXP0_BK120	B4		FPGA2_USB_DTR_N	J15
FPGA2_TXP1_BK120	E2		FPGA2_USB_RST_N	L21
FPGA2_RS232_CTS	K14		FPGA2_USB_RTS_N	L16
FPGA2_RS232_RTS	L14		FPGA2_USB_RX	J22
FPGA2_RS232_RX	G22		FPGA2_USB_SUSPEND	L20
FPGA2_RS232_TX	H22		FPGA2_USB_TX	K21

FPGA #3 Pinout

Table A-3 lists the connections for FPGA #3 (U34).

Table A-3: **FPGA #3 Pinout**

Signal Name	Pin	Signal Name	Pin
QDRII Memory Interface			
QDR2_CK_BY0_3_N	K34	QDR2_SA11	AB26
QDR2_CK_BY0_3_P	G28	QDR2_SA12	AB25
QDR2_CK_BY0_3_P	L34	QDR2_SA13	AA24
QDR2_CK_BY4_7_N	AJ34	QDR2_SA14	Y24
QDR2_CK_BY4_7_P	AA31	QDR2_SA15	AC27
QDR2_CK_BY4_7_P	AH34	QDR2_SA16	AB27
QDR2_CQ_BY0_3_N	E26	QDR2_SA17	AA26
QDR2_CQ_BY0_3_P	K33	QDR2_SA2	AJ27
QDR2_CQ_BY4_7_N	AA29	QDR2_SA3	AK26
QDR2_CQ_BY4_7_P	AD32	QDR2_SA4	AF28
QDR2_DLL_OFF_N	AK27	QDR2_SA5	AE28
QDR2_K_BY0_3_N	F28	QDR2_SA6	AH28
QDR2_K_BY0_3_P	E28	QDR2_SA7	AG28
QDR2_K_BY4_7_N	AC30	QDR2_SA8	AA28
QDR2_K_BY4_7_P	AB30	QDR2_SA9	AB28
QDR2_LB_BK11	P32	QDR2_W_N	AH27
QDR2_LB_BK11	P34	QDR2_BW_BY0_N	M32
QDR2_LB_BK13	AE34	QDR2_BW_BY1_N	L33
QDR2_LB_BK13	AJ32	QDR2_BW_BY2_N	L28
QDR2_LB_BK17	AE29	QDR2_BW_BY3_N	K28
QDR2_LB_BK17	AF31	QDR2_BW_BY4_N	AK33
QDR2_LB_BK19	K27	QDR2_BW_BY5_N	AK34
QDR2_LB_BK19	M28	QDR2_BW_BY6_N	AC29
QDR2_NC_A3	AG25	QDR2_BW_BY7_N	AD30
QDR2_NC_C6	AF24	QDR2_D_BY0_B0	T28
QDR2_R_N	AJ26	QDR2_D_BY0_B1	U30
QDR2_SA0	AJ29	QDR2_D_BY0_B2	R31
QDR2_SA1	AK29	QDR2_D_BY0_B3	T31
QDR2_SA10	AC28	QDR2_D_BY0_B4	N30

Table A-3: **FPGA #3 Pinout *(Continued)***

Signal Name	Pin	Signal Name	Pin
QDRII Memory Interface (cont.)			
QDR2_D_BY0_B5	M31	QDR2_D_BY4_B1	AH29
QDR2_D_BY0_B6	P30	QDR2_D_BY4_B2	AH30
QDR2_D_BY0_B7	P31	QDR2_D_BY4_B3	AJ30
QDR2_D_BY0_B8	L31	QDR2_D_BY4_B4	AF30
QDR2_D_BY1_B0	J27	QDR2_D_BY4_B5	AF29
QDR2_D_BY1_B1	M26	QDR2_D_BY4_B6	AK31
QDR2_D_BY1_B2	M25	QDR2_D_BY4_B7	AJ31
QDR2_D_BY1_B3	J25	QDR2_D_BY4_B8	AD29
QDR2_D_BY1_B4	J24	QDR2_D_BY5_B0	V30
QDR2_D_BY1_B5	L26	QDR2_D_BY5_B1	W27
QDR2_D_BY1_B6	L25	QDR2_D_BY5_B2	Y27
QDR2_D_BY1_B7	L24	QDR2_D_BY5_B3	W25
QDR2_D_BY1_B8	K24	QDR2_D_BY5_B4	V25
QDR2_D_BY2_B0	L29	QDR2_D_BY5_B5	W26
QDR2_D_BY2_B1	E31	QDR2_D_BY5_B6	Y26
QDR2_D_BY2_B2	F31	QDR2_D_BY5_B7	V24
QDR2_D_BY2_B3	J29	QDR2_D_BY5_B8	W24
QDR2_D_BY2_B4	H29	QDR2_D_BY6_B0	U31
QDR2_D_BY2_B5	F30	QDR2_D_BY6_B1	U32
QDR2_D_BY2_B6	G30	QDR2_D_BY6_B2	T34
QDR2_D_BY2_B7	F29	QDR2_D_BY6_B3	U33
QDR2_D_BY2_B8	E29	QDR2_D_BY6_B4	R32
QDR2_D_BY3_B0	K31	QDR2_D_BY6_B5	R33
QDR2_D_BY3_B1	P29	QDR2_D_BY6_B6	R34
QDR2_D_BY3_B2	N29	QDR2_D_BY6_B7	T33
QDR2_D_BY3_B3	M30	QDR2_D_BY6_B8	N32
QDR2_D_BY3_B4	L30	QDR2_D_BY7_B0	T25
QDR2_D_BY3_B5	J31	QDR2_D_BY7_B1	U25
QDR2_D_BY3_B6	J30	QDR2_D_BY7_B2	T26
QDR2_D_BY3_B7	G31	QDR2_D_BY7_B3	U26
QDR2_D_BY3_B8	H30	QDR2_D_BY7_B4	R27
QDR2_D_BY4_B0	AG30	QDR2_D_BY7_B5	R26

Table A-3: **FPGA #3 Pinout *(Continued)***

Signal Name	Pin	Signal Name	Pin
QDRII Memory Interface (cont.)			
QDR2_D_BY7_B6	U28	QDR2_Q_BY3_B2	G27
QDR2_D_BY7_B7	U27	QDR2_Q_BY3_B3	F26
QDR2_D_BY7_B8	T29	QDR2_Q_BY3_B4	F25
QDR2_Q_BY0_B0	J34	QDR2_Q_BY3_B5	H24
QDR2_Q_BY0_B1	H34	QDR2_Q_BY3_B6	H25
QDR2_Q_BY0_B2	H33	QDR2_Q_BY3_B7	G26
QDR2_Q_BY0_B3	J32	QDR2_Q_BY3_B8	G25
QDR2_Q_BY0_B4	F34	QDR2_Q_BY4_B0	AP32
QDR2_Q_BY0_B5	G33	QDR2_Q_BY4_B1	AN32
QDR2_Q_BY0_B6	E33	QDR2_Q_BY4_B2	AN33
QDR2_Q_BY0_B7	E32	QDR2_Q_BY4_B3	AN34
QDR2_Q_BY0_B8	E34	QDR2_Q_BY4_B4	AM32
QDR2_Q_BY1_B0	T24	QDR2_Q_BY4_B5	AM33
QDR2_Q_BY1_B1	R24	QDR2_Q_BY4_B6	AL33
QDR2_Q_BY1_B2	N25	QDR2_Q_BY4_B7	AL34
QDR2_Q_BY1_B3	P25	QDR2_Q_BY4_B8	AK32
QDR2_Q_BY1_B4	P24	QDR2_Q_BY5_B0	AF34
QDR2_Q_BY1_B5	N24	QDR2_Q_BY5_B1	AE33
QDR2_Q_BY1_B6	P27	QDR2_Q_BY5_B2	AF33
QDR2_Q_BY1_B7	P26	QDR2_Q_BY5_B3	AB33
QDR2_Q_BY1_B8	N28	QDR2_Q_BY5_B4	AC33
QDR2_Q_BY2_B0	G32	QDR2_Q_BY5_B5	AB32
QDR2_Q_BY2_B1	D34	QDR2_Q_BY5_B6	AC32
QDR2_Q_BY2_B2	C34	QDR2_Q_BY5_B7	AD34
QDR2_Q_BY2_B3	D32	QDR2_Q_BY5_B8	AC34
QDR2_Q_BY2_B4	C32	QDR2_Q_BY6_B0	Y32
QDR2_Q_BY2_B5	C33	QDR2_Q_BY6_B1	Y34
QDR2_Q_BY2_B6	B33	QDR2_Q_BY6_B2	AA34
QDR2_Q_BY2_B7	A33	QDR2_Q_BY6_B3	AA33
QDR2_Q_BY2_B8	B32	QDR2_Q_BY6_B4	Y33
QDR2_Q_BY3_B0	H28	QDR2_Q_BY6_B5	V34
QDR2_Q_BY3_B1	H27	QDR2_Q_BY6_B6	W34

Table A-3: **FPGA #3 Pinout *(Continued)***

Signal Name	Pin	Signal Name	Pin
QDRII Memory Interface (cont.)			
QDR2_Q_BY6_B7	V33	QDR2_Q_BY7_B4	W29
QDR2_Q_BY6_B8	V32	QDR2_Q_BY7_B5	Y31
QDR2_Q_BY7_B0	AB31	QDR2_Q_BY7_B6	W31
QDR2_Q_BY7_B1	Y29	QDR2_Q_BY7_B7	V27
QDR2_Q_BY7_B2	Y28	QDR2_Q_BY7_B8	V28
QDR2_Q_BY7_B3	V29		
RLDRAM II Memory Interface			
RLD2_A0	AD10	RLD2_CK_BY2_3_N	AE11
RLD2_A1	AD9	RLD2_CK_BY2_3_P	AF11
RLD2_A10	AC8	RLD2_CS_BY0_1_N	AK9
RLD2_A11	AP12	RLD2_CS_BY2_3_N	AK8
RLD2_A12	AA9	RLD2_DK_BY0_1_N	AH8
RLD2_A13	AA8	RLD2_DK_BY0_1_P	AG8
RLD2_A14	AM13	RLD2_DK_BY2_3_N	AH10
RLD2_A15	AN13	RLD2_DK_BY2_3_P	AH9
RLD2_A16	AA10	RLD2_QK_BY0_N	C13
RLD2_A17	AB10	RLD2_QK_BY0_P	B13
RLD2_A18	AP14	RLD2_QK_BY1_N	K9
RLD2_A19	AN14	RLD2_QK_BY1_P	K8
RLD2_A2	AE8	RLD2_QK_BY2_N	J7
RLD2_A3	AL10	RLD2_QK_BY2_P	H7
RLD2_A4	AL11	RLD2_QK_BY3_N	U7
RLD2_A5	AC9	RLD2_QK_BY3_P	T8
RLD2_A6	AC10	RLD2_QVLD_BY0_1	F11
RLD2_A7	AM11	RLD2_QVLD_BY2_3	U10
RLD2_A8	AM12	RLD2_REF_N	AJ9
RLD2_A9	AB8	RLD2_WE_N	AF9
RLD2_BA0	AJ11	RLD2_D_BY0_B0	D11
RLD2_BA1	AK11	RLD2_D_BY0_B1	H8
RLD2_BA2	AD11	RLD2_D_BY0_B2	G8
RLD2_CK_BY0_1_N	AG11	RLD2_D_BY0_B3	G10
RLD2_CK_BY0_1_P	AG10	RLD2_D_BY0_B4	F10

Table A-3: **FPGA #3 Pinout *(Continued)***

Signal Name	Pin	Signal Name	Pin
RLDRAM II Memory Interface (cont.)			
RLD2_D_BY0_B5	F8	RLD2_DM_BY2_3_N	T9
RLD2_D_BY0_B6	F9	RLD2_DQ_BY0_B0	G13
RLD2_D_BY0_B7	E8	RLD2_DQ_BY0_B1	F13
RLD2_D_BY0_B8	E9	RLD2_DQ_BY0_B2	N9
RLD2_D_BY1_B0	R11	RLD2_DQ_BY0_B3	N10
RLD2_D_BY1_B1	R7	RLD2_DQ_BY0_B4	E13
RLD2_D_BY1_B2	J6	RLD2_DQ_BY0_B5	E12
RLD2_D_BY1_B3	T6	RLD2_DQ_BY0_B6	L9
RLD2_D_BY1_B4	R6	RLD2_DQ_BY0_B7	M10
RLD2_D_BY1_B5	K6	RLD2_DQ_BY0_B8	E11
RLD2_D_BY1_B6	K7	RLD2_DQ_BY1_B0	J10
RLD2_D_BY1_B7	P6	RLD2_DQ_BY1_B1	B12
RLD2_D_BY1_B8	P7	RLD2_DQ_BY1_B2	A13
RLD2_D_BY2_B0	V9	RLD2_DQ_BY1_B3	H9
RLD2_D_BY2_B1	V10	RLD2_DQ_BY1_B4	H10
RLD2_D_BY2_B2	AK6	RLD2_DQ_BY1_B5	C12
RLD2_D_BY2_B3	AK7	RLD2_DQ_BY1_B6	D12
RLD2_D_BY2_B4	U8	RLD2_DQ_BY1_B7	J11
RLD2_D_BY2_B5	V8	RLD2_DQ_BY1_B8	K11
RLD2_D_BY2_B6	AJ6	RLD2_DQ_BY2_B0	E7
RLD2_D_BY2_B7	AJ7	RLD2_DQ_BY2_B1	E6
RLD2_D_BY2_B8	W9	RLD2_DQ_BY2_B2	G7
RLD2_D_BY3_B0	Y8	RLD2_DQ_BY2_B3	G6
RLD2_D_BY3_B1	AD7	RLD2_DQ_BY2_B4	F6
RLD2_D_BY3_B2	AC7	RLD2_DQ_BY2_B5	F5
RLD2_D_BY3_B3	AB5	RLD2_DQ_BY2_B6	J5
RLD2_D_BY3_B4	AA5	RLD2_DQ_BY2_B7	G5
RLD2_D_BY3_B5	AB7	RLD2_DQ_BY2_B8	H5
RLD2_D_BY3_B6	AB6	RLD2_DQ_BY3_B0	L4
RLD2_D_BY3_B7	AC5	RLD2_DQ_BY3_B1	P5
RLD2_D_BY3_B8	AC4	RLD2_DQ_BY3_B2	N5
RLD2_DM_BY0_1_N	G12	RLD2_DQ_BY3_B3	L6

Table A-3: **FPGA #3 Pinout *(Continued)***

Signal Name	Pin	Signal Name	Pin
RLDRAM II Memory Interface (cont.)			
RLD2_DQ_BY3_B4	M7	RLD2_DQ_BY3_B7	M5
RLD2_DQ_BY3_B5	N7	RLD2_DQ_BY3_B8	M6
RLD2_DQ_BY3_B6	N8		
FPGA #3 Clock and Reset Signals			
CLK_TO_FPGA3_MGT_N	D4	EXT_CLK_TO_FPGA3_N	AG13
CLK_TO_FPGA3_MGT_P	E4	EXT_CLK_TO_FPGA3_P	AH12
DIRECT_CLK_TO_FPGA3_N	AH22	FPGA3_LOW_FREQ_CLK	AH20
DIRECT_CLK_TO_FPGA3_P	AG22	FPGA3_RESET_N_IN	AH14
FPGA #3 MII Link Interface			
FPGA1_TO_FPGA3_MII_TX_CLK	AE14	FPGA1_TO_FPGA3_MII_TX_DATA3	AF20
FPGA1_TO_FPGA3_MII_TX_DATA0	AE16	FPGA1_TO_FPGA3_MII_TX_EN	AD20
FPGA1_TO_FPGA3_MII_TX_DATA1	AF15	FPGA1_TO_FPGA3_MII_TX_ERR	AE21
FPGA1_TO_FPGA3_MII_TX_DATA2	AF21	FPGA1_TO_FPGA3_MII_TX_SPARE	AF14
FPGA #3 Configuration Signals			
FPGA_INIT	N14	FPGA3_D_IN	P15
FPGA_PROGB	M22	FPGA3_DONE	M15
FPGA_TMS	AC14	FPGA3_DOUT_B	AD15
FPGA_VBATT	L23	FPGA3_HSWAPEN	M23
FPGA3_CCLK	N15	FPGA3_TCK	AB15
FPGA3_CNFG_M0	AD21	FPGA3_TDI_IN	AC15
FPGA3_CNFG_M1	AC22	FPGA3_TDO	AD14
FPGA3_CNFG_M2	AD22		
FPGA #3 Test and Debug Signals			
FPGA3_DIP0	AG18	FPGA3_TEST_HDR_BY0_B3	AF13
FPGA3_DIP1	AG15	FPGA3_TEST_HDR_BY0_B4	AG23
FPGA3_DIP2	AH15	FPGA3_TEST_HDR_BY0_B5	AF23
FPGA3_DIP3	AG20	FPGA3_TEST_HDR_BY0_B6	AE12
FPGA3_SPYHOLE_BK12	R8	FPGA3_TEST_HDR_BY0_B7	AE13
FPGA3_SPYHOLE_BK13	AG32	FPGA3_TEST_HDR_BY1_B0	AE24
FPGA3_TEST_HDR_BY0_B0	AE23	FPGA3_TEST_HDR_BY1_B1	AD24
FPGA3_TEST_HDR_BY0_B1	AE22	FPGA3_TEST_HDR_BY1_B2	AD25
FPGA3_TEST_HDR_BY0_B2	AG12	FPGA3_TEST_HDR_BY1_B3	AD26

Table A-3: **FPGA #3 Pinout *(Continued)***

Signal Name	Pin	Signal Name	Pin
FPGA #3 Test and Debug Signals (cont.)			
FPGA3_TEST_HDR_BY1_B4	AC24	FPGA3_TEST_HDR_BY1_B6	AE26
FPGA3_TEST_HDR_BY1_B5	AC25	FPGA3_TEST_HDR_BY1_B7	AE27
FPGA #3 Test Display Signals			
FPGA3_7SEG_0_N	AG17	FPGA3_7SEG_6_N	AF19
FPGA3_7SEG_1_N	AH18	FPGA3_7SEG_DP_N	AG21
FPGA3_7SEG_2_N	AE18	FPGA3_LED0	AD19
FPGA3_7SEG_3_N	AF18	FPGA3_LED1	AE19
FPGA3_7SEG_4_N	AG16	FPGA3_LED2	AE17
FPGA3_7SEG_5_N	AH17	FPGA3_LED3	AF16
FPGA #3 External Interfaces			
FPGA3_RS232_CTS	G15	FPGA3_USB_DTR_N	H13
FPGA3_RS232_RTS	L18	FPGA3_USB_RST_N	L19
FPGA3_RS232_RX	H18	FPGA3_USB_RTS_N	H15
FPGA3_RS232_TX	K17	FPGA3_USB_RX	J20
FPGA3_USB_CTS_N	H14	FPGA3_USB_SUSPEND	K19
FPGA3_USB_DSR_N	J14	FPGA3_USB_TX	J21
FPGA #3 System ACE Control Signals			
SYSACE_CTRL0	H12	SYSACE_MPA5	K22
SYSACE_CTRL1	G23	SYSACE_MPA6	J12
SYSACE_CTRL2	H23	SYSACE_MPD0	L21
SYSACE_CTRL3	K13	SYSACE_MPD1	L20
SYSACE_CTRL4	K12	SYSACE_MPD2	L15
SYSACE_MPA0	G22	SYSACE_MPD3	L16
SYSACE_MPA1	H22	SYSACE_MPD4	J22
SYSACE_MPA2	L14	SYSACE_MPD5	K21
SYSACE_MPA3	K14	SYSACE_MPD6	K16
SYSACE_MPA4	K23	SYSACE_MPD7	J15

XILINX®

Appendix B

Bill of Materials

This appendix lists the bill of materials (BOM) for many of the components used for the assembly of the Virtex-5 FPGA ML561 Development Board, Revision A. Wherever feasible and practical, the associated reference designators are also listed for each part. The component part number in the "Mfr. Part Number" column includes a link to the corresponding manufacturer or supplier's web page. Check with the manufacturer for current information regarding the location and status of component data sheets.

Table B-1: **Bill of Materials**

Category	Description	Manufacturer	Mfr. Part Number	Reference Designators
FPGA	Virtex-5 FPGA	Xilinx	XC5VLX50T-FFG1136 -2 speed grade	U5, U7, U34
Memory	DDR2 Registered DIMM	Micron	MT9HTF6472Y-667 (RDIMM)	XP1, XP2, XP3, XP4, XP5 (DIMM)
	DDR2 Unbuffered DIMM	Micron	MT9HTF6472AY-667 (UDIMM)	XP1, XP2, XP3, XP4, XP5 (DIMM)
	DDR400 SDRAM	Micron	MT46V32M16BN-5B	U6, U9
	DDR2 SDRAM	Micron	MT47H32M16CC-3	U11, U12
	QDRII	Samsung	K7R643684M-FC30	U35, U41
	RLDRAM II	Micron	MT49H16M18BM-25	U25, U33
	DIMM Socket	SMP Technology	B037-2401-010-0-Z	XP1, XP2, XP3, XP4, XP5 (Socket)
Clock	33 MHz Oscillator	Epson	SG-8002CA-33.0000M-PCC	Y2, Y3
	200 MHz Oscillator	Epson	EG2121CA-200.0000M-PHPAB	Y1
Configuration	System ACE Controller	Xilinx	XCCACE-TQG144I	U45
	JTAG Port	Molex	87832-1420	P114

Table B-1: **Bill of Materials *(Continued)***

Category	Description	Manufacturer	Mfr. Part Number	Reference Designators
Power	15A Power Module	Texas Instruments	PTH05010-WAZ	VR1, VR6, VR9, VR10, VR12, VR13
	6A Power Module	Texas Instruments	PTH05000-WAZ	VR2, VR4, VR14
	4A LDO	Maxim	MAX8556ETE	VR3, VR5, VR7, VR8
	1.5A VLDO Regulator	Linear Technology	LTC3026EMSE#PBF	U15
	DDR Bus Termination Regulator	Fairchild Semiconductor	FN6555	U1, U2, U14, U42
	Power Measurement Header	3M	3429-6002	P102
	500 mA VLDO Regulator	Linear Technology	LT3021ES8	U16, U22
	5A LDO	Texas Instruments	TPS75501	U23
	Power Sensing Resistor	Isotek Corp.	SMV-R010-0.5	R63, R724, R764, R777, R874, R885, R954
Glue Logic	USB to RS-232 Bridge	Silicon Labs	CP2102GM	U43
	Schmitt Inverter	Toshiba	TC74LCX14FTCT-ND	U32
	Level Translator	Maxim	MAX3008	U10
	RS-232 Compatible Transceiver	Maxim	MAX3316ECUP	U31
	CMOS Octal Buffer	ON Semiconductor	MC74LCX541DT	U37, U38
Clock Buffer	LVCMOS, 1-to-4	Integrated Device Technology	ICS8304	U19
	LVCMOS, 1-to-4, 5V Tolerant	Integrated Device Technology	ICS553MI	U30, U44
	Differential LVPECL, 1-to-6	Integrated Device Technology	ICS853006	U17, U18
	Diff. LVPECL-to-LVDS, 1-to-4	Integrated Device Technology	ICS8543BG	U20
	Diff. HCSL, 1-to-4	Integrated Device Technology	ICS557-06	U24
Display	7-Segment LED	Stanley Electric	NAR131SB	D17, D23, D35
Socket/ Connector	Banana Jack (Red)	Hirschmann	973-582-101	J18, J25
	Banana Jack (Black)	Hirschmann	973-582-100	J17, J24
	RS232 DB-9 Port	Tyco Electronics	747250-4	P73
	USB Port	KYCON	KUSB-AS-1-N-BLK	J29
	Test Headers (2x8)	Tyco Electronics	146130-7-ND	P20, P21, P93
	CompactFlash Holder	Molex	55358-5038	J27
	CompactFlash Ejector	Molex	55364-0011	
	5V Power Input Jack	CUI Inc.	PJ-002AH	J28
	Power Fuse	Digikey	RUE600-ND	F1, F2
	SMA for Ext Clock Inputs	AMPHENOL-RF	901-144-8RFX	J16, J19, J20, J21

Table B-1: **Bill of Materials *(Continued)***

Category	Description	Manufacturer	Mfr. Part Number	Reference Designators
Switch	DIP (Test Inputs)	ITT_INDUSTRIES	SDA04H1KD	SW1, SW2, SW6
	System Reset (Black)	Panasonic	EVQ11L07K	SW4
	Configuration Reset (Red)	Panasonic	EVQ11L05K	SW7
	Power Input (12V and 5V)	APEM	25336NA	SW3, SW5
	Rotary 8-position	Digikey	GH3311-ND	SW8
Capacitor	0402 (Assorted Values)	Panasonic	ECJ-xxx	MLC_CAP_0402
	0603 (Assorted Values)	Panasonic	ECJ-xxx	MLC_CAP_0603
	0805 (Assorted Values)	Panasonic	ECJ-xxx	MLC_CAP_0805
	Tantalum C	Kemet	T520xxx	TANT_CAP_C
	Tantalum D	Kemet	T520xxx	TANT_CAP_D
	Tantalum E	Kemet	T520xxx	TANT_CAP_E
Inductor	DO3316	Coilcraft	DO3316	Lxx
	Ferrite Bead	TDK	MPZ1608S221A	FBxx
	0805 (assorted values)	Digikey	HZ0805E601R-00	Lxx
Resistor	0402 (assorted values)	Panasonic	ERJ-xxx	Rxxx
	0603 (assorted values)	Panasonic	ERJ-xxx	Rxxx
	0805 (assorted values)	Panasonic	ERJ-xxx	Rxxx
Transistor	MOSFET	Diodes	BSS138	Qxx

Appendix C

LCD Interface

This appendix describes the LCD interface for the Virtex-5 FPGA ML561 Development Board.

General

The Virtex-5 FPGA ML561 Development Board has a full graphical LCD panel. This display was chosen because of its possible use in embedded systems. A character-type display also can be connected because the graphical LCD has the same interface as the character-type LCD panels.

A hardware character generator must be designed to display characters on the screen.

Display Hardware Design

The FPGA (I/O functioning at 2.5V) is connected to the graphic LCD panel through a set of voltage-level converting devices. These switches translate the 2.5 I/O voltage to a 3.3V voltage for the LCD panel.

A graphics-based LCD panel from DisplayTech (64128EFCBC-XLP) is used on the Virtex-5 FPGA ML561 Development Board. The control for this LCD panel is based on the KS0713 controller from Samsung. The KS0713 is a 65-column, 132-segment driver-controller device for graphic dot matrix LCD systems. The chip accepts serial or parallel display data. The 8-bit parallel interface is compatible with most LCD panel manufacturers. The serial connection mode is write only.

Extra features added to the interface in addition to the normal parallel signals are:

- Intel or Motorola compatible interface
- External reset of the chip
- External chip select

The interface also contains the following built-in options for the display and controller:

- On-chip oscillator circuitry
- On-chip voltage converter (x2, x3, x4, and x5)
- A 64-step electronic contrast control function

Table C-1 summarizes the controller specifications.

Table C-1: **Display Controller Specifications**

Parameter	Specification
Supply Voltage	2.4V to 3.6V (V_{DD})
LCD Driving Voltage	4V to 15V (V_{LCD} = V0 - V_{DD})
Power Consumption	70 µA typical (V_{DD} = 3V, x4 boost, V0 = 11V, internal supply = ON)
Sleep Mode	2 µA
Standby Mode	10 µA

The on-chip RAM size is 65 x 132 = 8580 bits.

Hardware Schematic Diagram

Figure C-1 illustrates the schematic for the display.

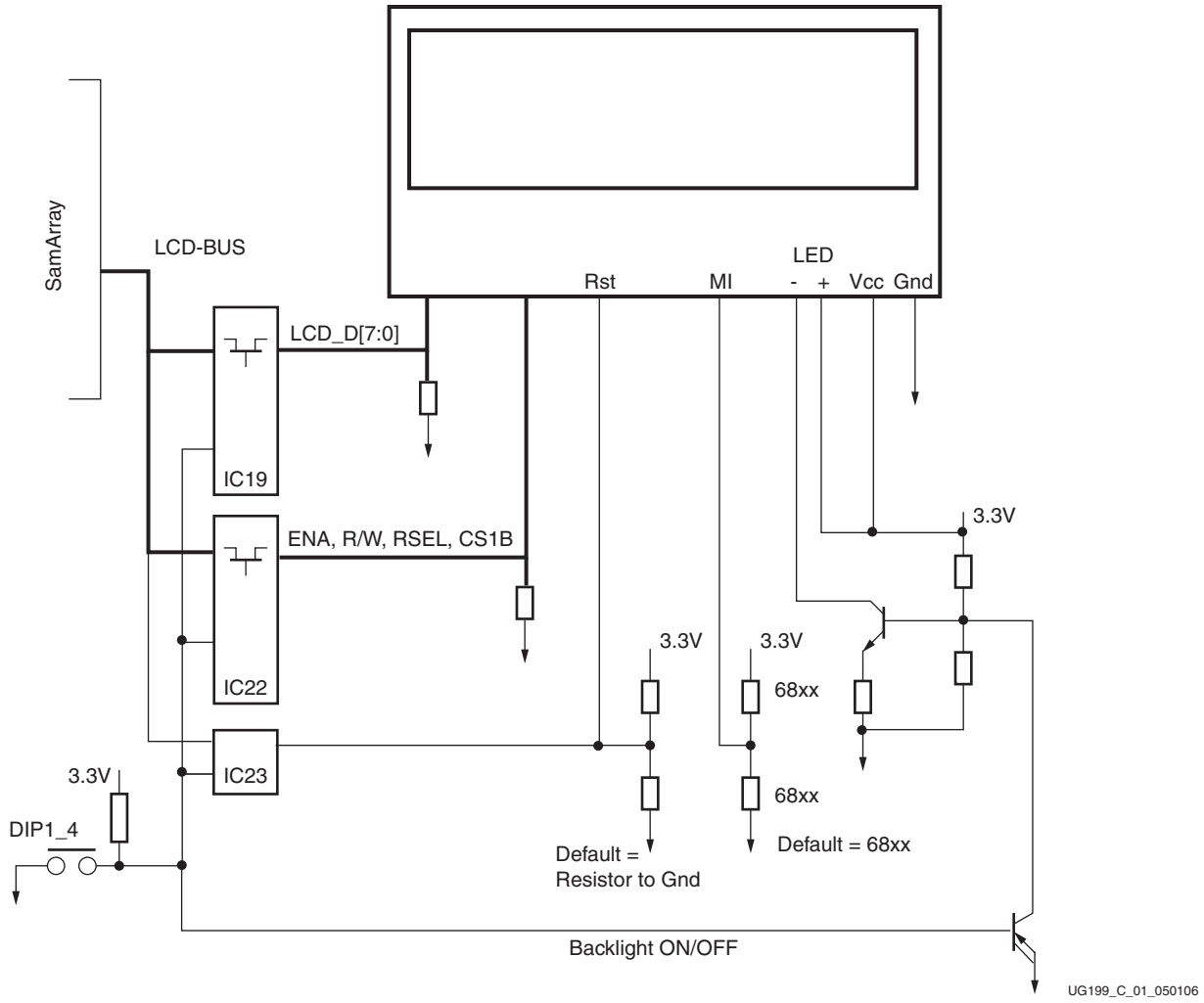

Figure C-1: **Display Schematic Diagram**

Peripheral Device KS0713

Figure C-2 is a block diagram of the Samsung KS0713.

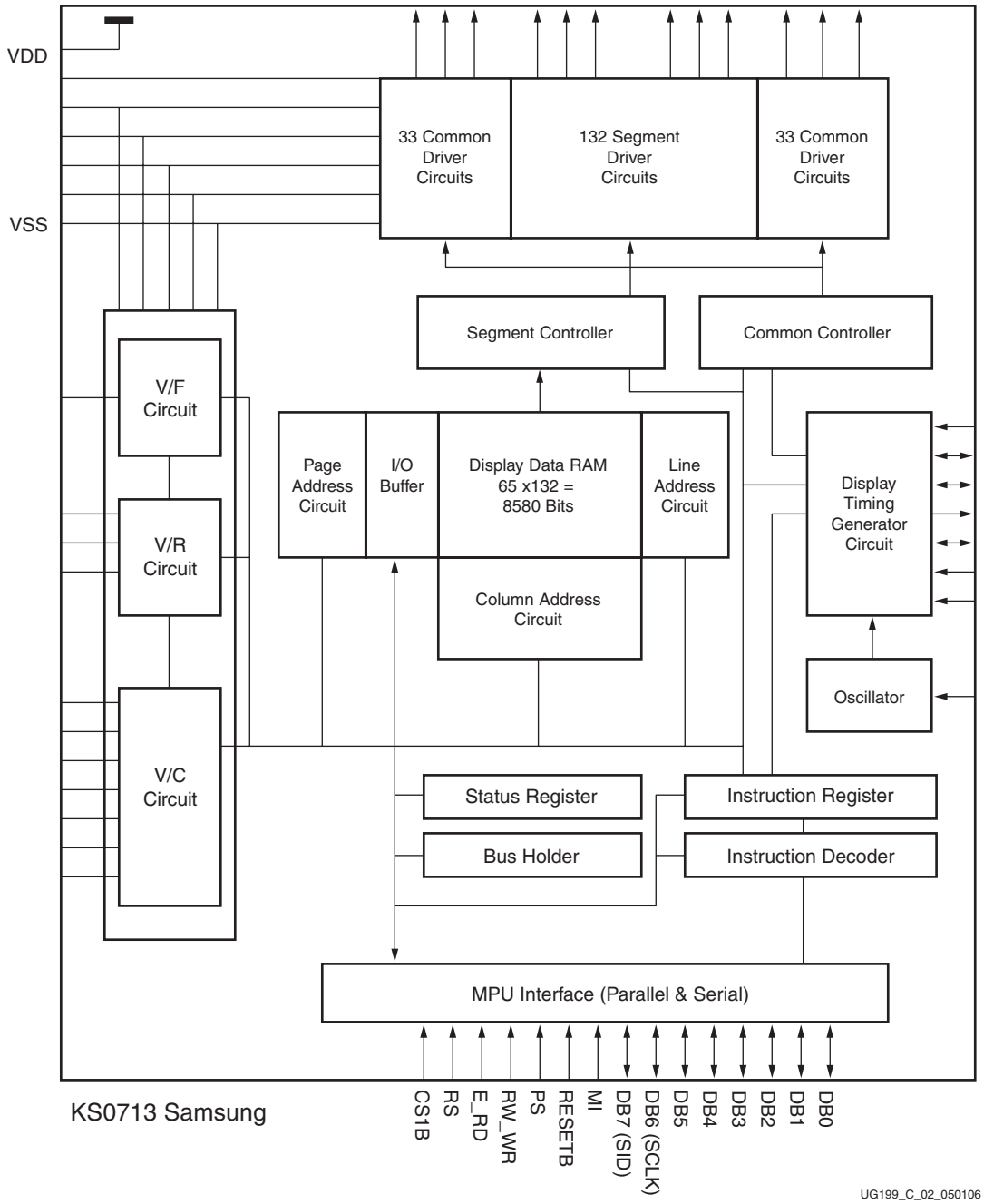

Figure C-2: **KS0713 Block Diagram**

Figure C-3 shows only the signals of interest for the LCD controller. The data sheet from the Samsung web pages provides a complete signal listing.

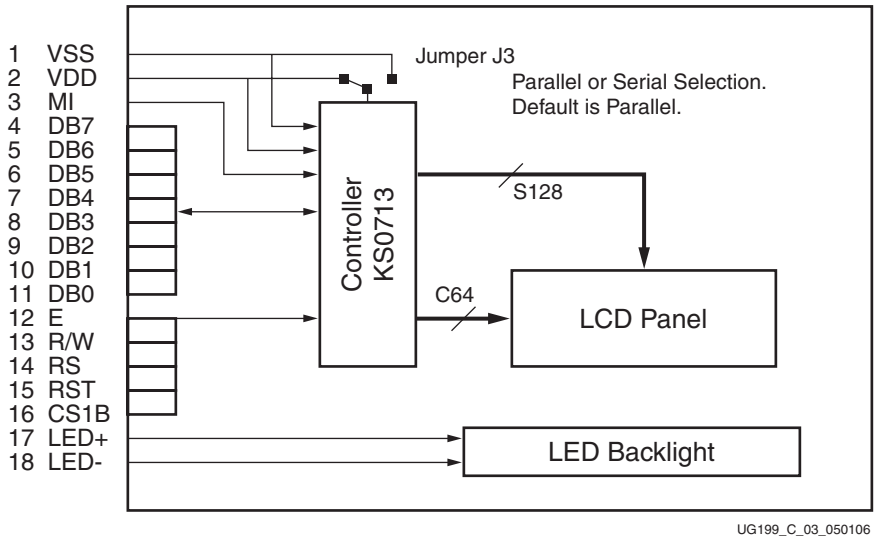

Figure C-3: **64128EFCBC-XLP Block Diagram**

Figure C-4 shows the dimensions for the 64128EFCBC-XLP LCD panel.

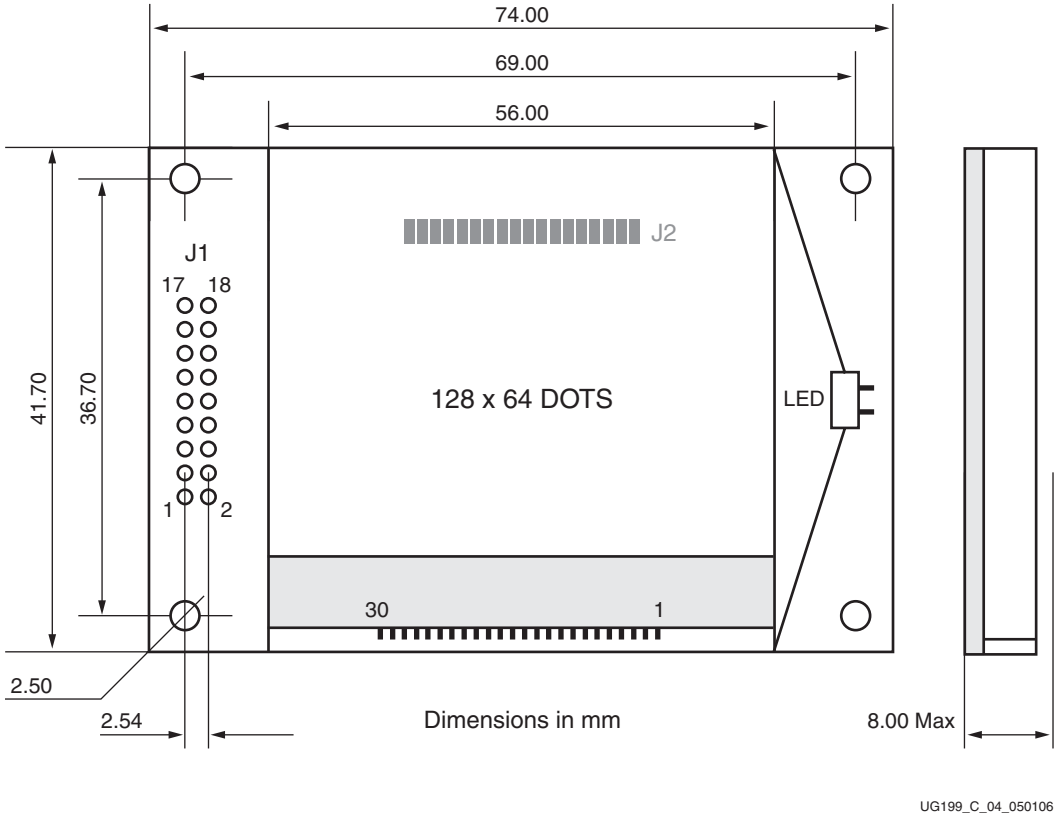

Figure C-4: **64128EFCBC-XLP Dimensions**

Controller – Operation

The pixels for the LCD panel are stored in the controller data RAM. This RAM is a 65-row by 132-column array. Each display pixel is represented by a single bit in the RAM array.

The interface to the RAM array goes through the 8-bit (DB0 – DB7) LCD interface. Therefore, the 65-bit rows are split into eight pages of eight lines. The ninth page is a single line page (DB0 only).

Interface designs can read from or write to the RAM array.

The display page is changed through the 4-bit page address register.

The column address (line address) is set with a two-byte register access. The line address corresponds to the first line that is going to be displayed on the LCD panel. This address is located in a 6-bit address register.

The RAM array is configured such that there are two characters per row (page), where each character pair uses eight rows of the display panel. Table C-2 shows the input data bytes, address lines, ADC control, and LCD outputs (segments).

Table C-2: **LCD Panel**

DB3	DB2	DB1	DB0	Data																			Line Address
0	0	0	0	DB0		■	■	■			■	■	■	■			Page 0							00H
				DB1	■				■		■				■									01H
				DB2	■				■		■				■									02H
				DB3	■				■		■	■	■	■										03H
				DB4	■	■	■	■	■		■				■									04H
				DB5	■				■		■				■									05H
				DB6	■				■		■	■	■	■										06H
				DB7																				07H
0	0	0	1	DB0		■	■	■			■	■	■				Page 1							08H
				DB1	■				■		■			■										09H
				DB2	■						■				■									0AH
				DB3	■						■				■									0BH
				DB4	■						■				■									0CH
				DB5	■				■		■			■										0DH
				DB6		■	■	■			■	■	■											0EH
				DB7																				0FH

Table C-2: **LCD Panel *(Continued)***

DB3	DB2	DB1	DB0	Data	Line Address
0	0	1	0	DB0	10H
				DB1	11H
				DB2	12H
				DB3	13H
				DB4	14H
				DB5	15H
				DB6	16H
				DB7	17H
0	0	1	1	DB0	18H
				DB1	19H
				DB2	1AH
				DB3	1BH
				DB4	1CH
				DB5	1DH
				DB6	1EH
				DB7	1FH
0	1	0	0	DB0	20H
				DB1	21H
				DB2	22H
				DB3	23H
				DB4	24H
				DB5	25H
				DB6	26H
				DB7	27H
0	1	0	1	DB0	28H
				DB1	29H
				DB2	2AH
				DB3	2BH
				DB4	2CH
				DB5	2DH
				DB6	2EH
				DB7	2FH

Table C-2: **LCD Panel *(Continued)***

DB3	DB2	DB1	DB0	Data																				Line Address
0	1	1	0	DB0	■				■		■				■		Page 6							30H
				DB1	■	■		■	■		■				■									31H
				DB2	■		■		■		■	■			■									32H
				DB3	■		■		■		■		■		■									33H
				DB4	■				■		■			■	■									34H
				DB5	■				■		■				■									35H
				DB6	■				■		■				■									36H
				DB7																				37H
0	1	1	1	DB0		■	■	■			■	■	■	■			Page 7							38H
				DB1	■				■		■				■									39H
				DB2	■				■		■				■									3AH
				DB3	■				■		■	■	■	■										3BH
				DB4	■				■		■													3CH
				DB5	■				■		■													3DH
				DB6		■	■	■			■													3EH
				DB7																				3FH
1	0	0	0	DB0													Page 8							

Column Address																					
	ADC = 0	0	1	2	3	4	5	6	7	8	9	A	B		7E	7F	80	81	82	83
	ADC = 1	83	82	81	80	7F	7E	7D	7C	7B	7A	79	78		5	4	3	2	1	0
LCD Output		Seg 1	Seg 2	Seg 3	Seg 4	Seg 5	Seg 6	Seg 7	Seg 8	Seg 9	Seg 10	Seg 11	Seg 12		Seg 127	Seg 128	Seg 129	Seg 130	Seg 131	Seg 132

When a page is addressed, all the bits representing dots on the LCD panel can be accessed in that page. An array of 8x132 bits is available. The line address dictates what line of the RAM is going to be displayed on the first line of the glass panel.

Controller – LCD Panel Connections

The controller die, KS0713, connects to the LCD glass panel and user connection pins via a small PCB. Other necessary pins have default connections on the PCB.

Controller – Power Supply Circuits

Figure C-5 shows the power supply circuits. The power supply is used in the five times boost mode, where VDD is 3.3V and VOUT is 16.5V. VOUT is the operating voltage of the operational amplifier delivering the operating voltage, V0, for the LCD panel.

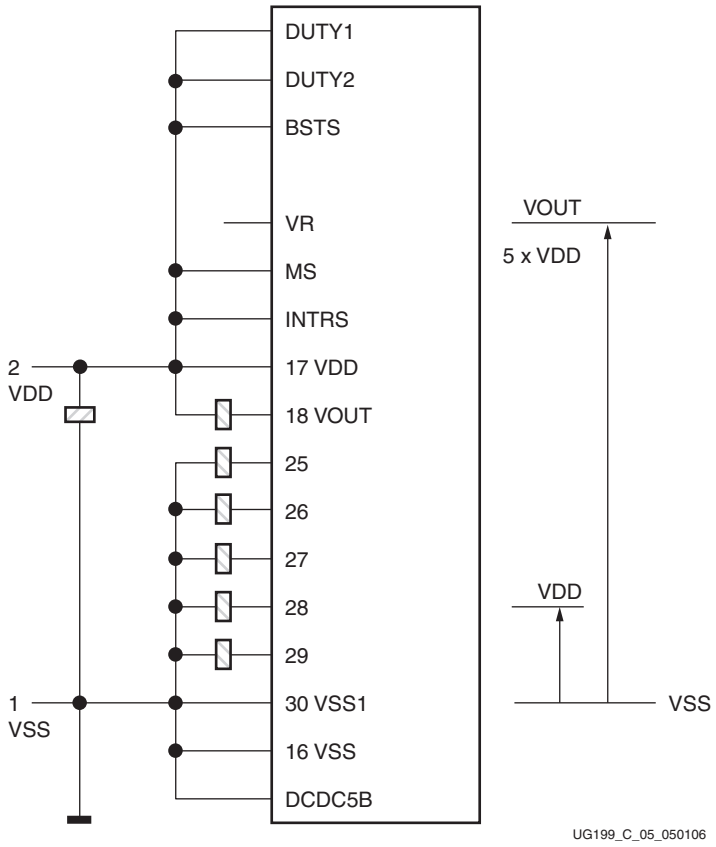

Figure C-5: **Power Supply Circuits**

The LCD operating voltage, V0, is set with two resistors R_A and R_B. INTRS is driven Low when the resistors are external. INTRS is driven High when the resistors are internal. For the Virtex-5 FPGA ML561 Development Board, internal resistors are selected.

The LCD operating voltage (V0) and the Electronic Volume Voltage (V_{EV}) can be calculated in units of V using Equation C-1 and Equation C-2:

$$V0 = \left(1 + \frac{R_B}{R_A}\right) \times V_{EV} \qquad \textit{Equation C-1}$$

$$V_{EV} = \left(1 - \frac{63 - \alpha}{300}\right) \times V_{REF} \qquad \textit{Equation C-2}$$

In Equation C-2, V_{REF} is equal to 2.0V at 25 °C.

The values of the reference voltage parameter, α, and the ratio R_A/R_B are determined with bit settings in the LCD controller's instruction registers. Thus, it is possible to change physical operating parameters of the LCD through register bit settings, controlling the operating voltage, and the electronic volume level.

The voltage and contrast settings must be configured before the LCD panel is ready for operation. Figure C-6 shows the initialization procedure required to set up the LCD controller.

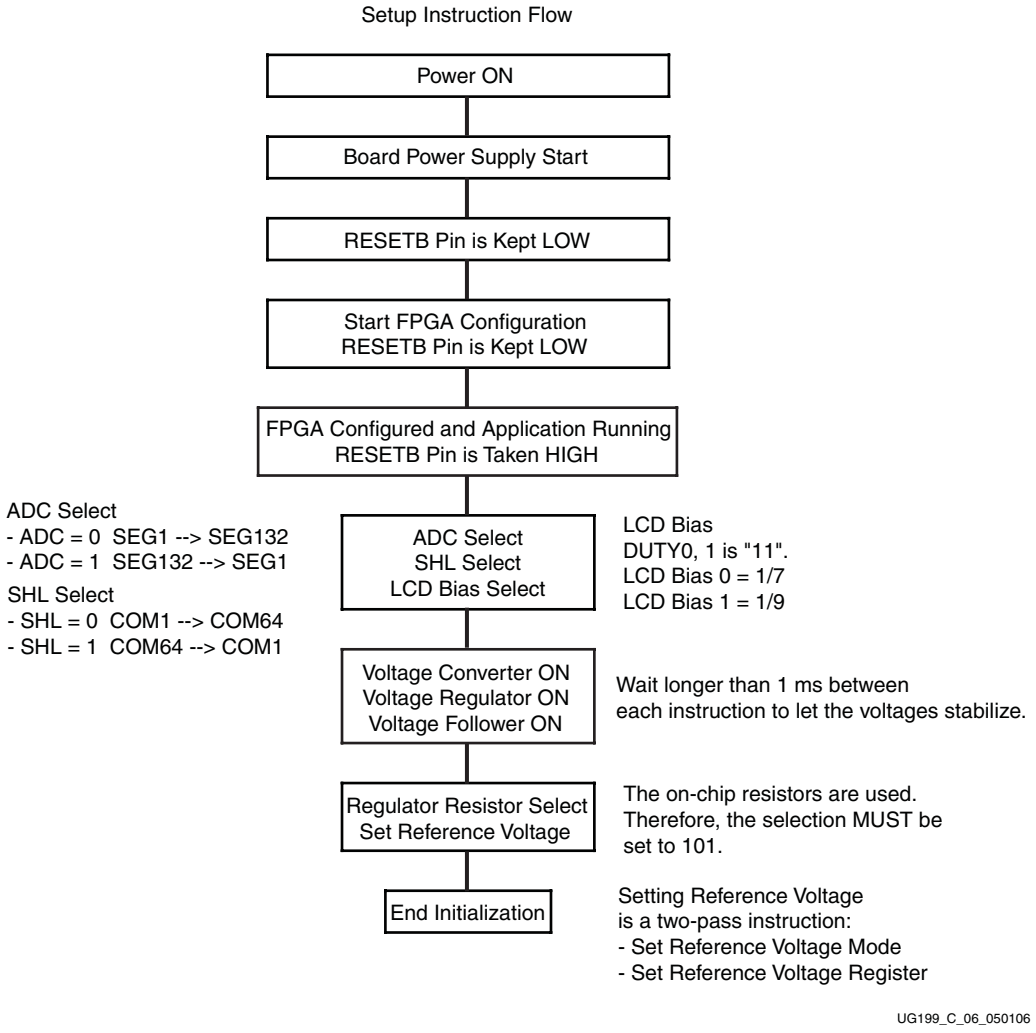

Figure C-6: **LCD Controller Initialization Flow**

Operation Example of the 64128EFCBC-3LP

The KS0713 LCD controller has several default settings of operation on the LCD panel PCB. Some settings are forced through direct bonding on the chip. The default settings are:

- Master mode
- Parallel mode
- Internal oscillator
- Duty cycle ratio is set to 1/65
- Voltage converter input is between 2.4V ≤ VDD ≤ 3.6V, where VDD connects to 3.3V
- Internal voltage divider resistors
- Temperature coefficient is set to -0.05%/°C
- Normal power mode is set

- The voltage follower and voltage regulator are set to:
  - Five times boost mode
  - The V4, V3, V2, V1, and V0 outputs depend on the bias settings of 1/9 or 1/7.

Because of these default settings, the following display controller connections are not used:

- DISP: Turns into an output when Master mode is selected
- FRS: Static driver segment output
- M: Used in Master/Slave display configurations
- CL: Clock pin used in Master/Slave display configurations

When RESETB is Low, the display controller is initialized as indicated in Table C-3.

Table C-3: **Display Controller Initialization (RESETB is Low)**

Parameter	Initial Value
Display	OFF
Entire Display	OFF
ADC Select	OFF
Reverse Display	OFF
Power Control	0,0,0 (VC, VR, VF)
LCD Bias	1/7
Read-Modify-Write	OFF
SHL Select	OFF
Static Indicator Mode	OFF
Static Indicator Register	0,0 (S1, S0)
Display Start	0 (First line)
Column Address	0
Page Address	0
Regulator Select	0,0,0 (R2, R1, R0)
Reference Voltage	OFF
Reference Voltage Register	1,0,0,0,0,0 (SV5, SV4, SV3, SV2, SV1, SV0)

When RESETB is High, the display must be initialized. The first steps to be taken to guarantee correct operation of the display and the controller are:

- Configure the ADC bit. This bit determines the scanning direction of the segments.
  - When the RESETB signal is active, ADC is reset to *0*, meaning that the segments are scanned from SEG1 up to SEG132.
  - When ADC is set to *1*, the segments are scanned in opposite direction.
- Configure the SHL bit. This bit sets the scanning direction of the COM lines.
  - When the RESETB signal is active, SHL is reset to *0*, meaning that the segments are scanned from COM1 up to COM64.
  - When SHL is set to *1*, the common lines are scanned in opposite direction.

After the SHL bit is configured, these settings normally are not changed.

- Select the LCD bias settings.
  - The duty cycle is selected as 1/65 by hardwiring the controller IC pads on the display PCB.
  - The LCD bias is set to:
    - 1/7: when the BIAS bit is 0
    - 1/9: when the BIAS bit is 1

The following steps are performed next:

- Start the onboard converter, regulator, and follower
- Set the regulator resistor values (see Table C-4)
- Configure the reference voltage register parameters (see Table C-5)

Table C-4: **Resistor Value Settings**

	3-Bit Data Settings (R2 R1 R0)							
	000	001	010	011	100	**101**	110	111
1+(Rb/Ra)	1.90	2.19	2.55	3.02	3.61	**4.35**	5.29	6.48

Table C-5: **Reference Voltage Parameters**

SV5	SV4	SV3	SV2	SV1	SV0	Reference Voltage Parameter (α)
0	0	0	0	0	0	0
0	0	0	0	0	1	1
..	..	…	..	..	..	..
..	..	..	..	..	..	..
1	1	1	1	1	0	62
1	1	1	1	1	1	63

At startup of the LCD controller (after RESETB operation), the resistor and reference voltage values are:

- Resistor selection is: 0,0,0
- Reference voltage is: 1,0,0,0,0,0

The resistor selection value MUST be set to 101b when using this LCD panel.

After the display is brought to operational mode, it is best to wait at least 1 ms to ensure the stabilization of power supply levels. After this time, all other necessary display initializations can be performed.

Instruction Set

Table C-6 shows the instruction set for the LCD panel.

Table C-6: **Display Instructions**

Instruction	RS	RW	DB7	DB6	DB5	DB4	DB3	DB2	DB1	DB0
Read display data	1	1	Read Data							
8-bit data specified by the column and page address can be read from the Display Data RAM. The column address is increased automatically, thus data can be read continuously from the addressed page.										
Write display data	1	0	Write Data							
8-bit data can be written into a RAM location specified by the column and page address. The column address is increased automatically, thus data can be written continuously to the addressed page.										
Read status	0	1	BUSY	ADC	ONOFF	RESETB	0	0	0	0
BUSY: Device is BUSY when internal operation or reset. (0=active, 1 =busy). ADC: Indicates the relationship between RAM column address and segment driver. ONOFF: Indicates display ON or OFF status. RESETB: Indicates if initialization is in progress.										
Display ON/OFF	0	0	1	0	1	0	1	1	1	DON
Turn display ON or OFF. (1=ON, 0 = OFF)										
Initial display line	0	0	0	1	ST5	ST4	ST3	ST2	ST1	ST0

Sets the line address of the display RAM to determine the initial line of the LCD panel.

ST5	ST4	ST3	ST2	ST1	ST0	
0	0	0	0	0	0	Line address 0
0	0	0	0	0	1	Line address 1
..	..	..	..	..	..	..
1	1	1	1	1	0	Line address 62
1	1	1	1	1	1	Line address 63

Set reference voltage mode	0	0	1	0	0	0	0	0	0	1
Set reference voltage register	0	0	x	x	SV5	SV4	SV3	SV2	SV1	SV0

This is a two-byte instruction. The first instruction sets the reference voltage mode. The second instruction sets the reference voltage parameter.

SV5	SV4	SV3	SV2	SV1	SV0	
0	0	0	0	0	0	0
0	0	0	0	0	1	1
..	..	..	..	..	..	..
1	1	1	1	1	0	62
1	1	1	1	1	1	63

Table C-6: **Display Instructions *(Continued)***

Instruction	RS	RW	DB7	DB6	DB5	DB4	DB3	DB2	DB1	DB0
Set page address	0	0	1	0	1	1	P3	P2	P1	P0
This instruction sets the address of the display data page. Any RAM data bit can be accessed when its page address and column address are specified. Changing the Page Address does not affect the display status.										

P3	P2	P1	P0	
0	0	0	0	page 0
0	0	0	1	page 1
..	..	..	..	...
0	1	1	1	page 7
1	0	0	0	page 8

Set column address MSB	0	0	0	0	0	1	Y7	Y6	Y5	Y4
Set column address LSB	0	0	0	0	0	0	Y3	Y2	Y1	Y0
This instruction sets the address of the display data RAM. When a read or write to or from the display data RAM occurs, the addresses are automatically increased.										

Y7	Y6	Y5	Y4	Y3	Y2	Y1	Y0	
0	0	0	0	0	0	0	0	Col Addr 0
0	0	0	0	0	0	0	1	Col Addr 1
..	..	..	..	..	..	..	..	...
1	1	1	1	1	1	1	0	Col Addr 130
1	1	1	1	1	1	1	1	Col Addr 131

ADC select	0	0	1	0	1	0	0	0	0	ADC

This instruction changes the relationship between RAM column address and segment driver.

ADC = 0, SEG1 --> SEG132 default mode
ADC = 1, SEG132 --> SEG1

Table C-6: **Display Instructions *(Continued)***

Instruction	RS	RW	DB7	DB6	DB5	DB4	DB3	DB2	DB1	DB0
Reverse display ON/OFF	0	0	1	0	1	0	0	1	1	REV
<table><tr><td>REV</td><td>RAM bit data = '1'</td><td>RAM bit data = '0'</td></tr><tr><td>0</td><td>Pixel ON</td><td>Pixel OFF</td></tr><tr><td>1</td><td>Pixel OFF</td><td>Pixel ON</td></tr></table>										
Entire display ON/OFF	0	0	1	0	1	0	0	1	0	EON
This instruction forces the display to be turned on regardless the contents of the display data RAM. The contents of the display data RAM are saved. This instruction has priority over reverse display.										
LCD bias select	0	0	1	0	1	0	0	0	1	BIAS
This instruction selects the LCD bias. <table><tr><td>Duty ratio</td><td>Bias = 0</td><td>Bias = 1</td></tr><tr><td>1/65</td><td>1/7</td><td>1/9</td></tr></table>										
Set modify-read	0	0	1	1	1	0	0	0	0	0
This instruction stops the automatic incrementing of the column address by a read operation. The automatic increment is still done with a write operation.										
Reset modify-read	0	0	1	1	1	0	1	1	1	0
This instruction resets the changed modify-read to the normal.										
Reset	0	0	1	1	1	0	0	0	1	0
This instruction resets the LCD controller registers to the default values. The instruction CANNOT initialize the LCD power supply initialized with RESETB.										
SHL select	0	0	1	1	0	0	SHL	x	x	x
This instruction sets the COM output scanning direction. SHL = 0, COM1 ----> COM64 (default) SHL = 1, COM64 ----> COM1										
Power Control	0	0	0	0	1	0	1	VC	VR	VF
This instruction selects one of the eight power circuit functions. In the case of the DisplayTech 64128EFCBC display, these must be kept at "000"										
Regulator resistor select	0	0	0	0	1	0	0	R2	R1	R0
This instruction selects the resistor ratio Rb/Ra.										
Set static indicator mode	0	0	1	0	1	0	1	1	0	SM
Set static indicator register	0	0	x	x	x	x	x	x	S1	S0
This is a two-byte instruction. The first instruction enables the second instruction. The second instruction update the contents of the static indicator register.										

Read/Write Characteristics (6800 Mode)

Table C-7 list the read and write timing parameters in 6800 mode. The associated waveforms for these parameters are illustrated in Figure C-7.

Table C-7: **Read/Write Characteristics in 6800 Mode**

Parameter	Signal	Symbol	Min	Typ	Max	Unit
Address Setup Time	RS	T_{AS}	13	-	-	ns
Address Hold Time		T_{AH}	17	-	-	ns
Data Setup Time	DB7 to DB0	T_{DS}	35	-	-	ns
Data Hold Time		T_{DH}	13	-	-	ns
Access Time		T_{ACC}	-	-	125	ns
Output Disable Time		T_{OD}	10	-	90	ns
System Cycle Time	RS	T_{CYC}	400	-	-	ns
Enable Pulse Width	Read/Write	E_RD	T_{PWR}	125	-	ns
			T_{PWW}	55	-	ns

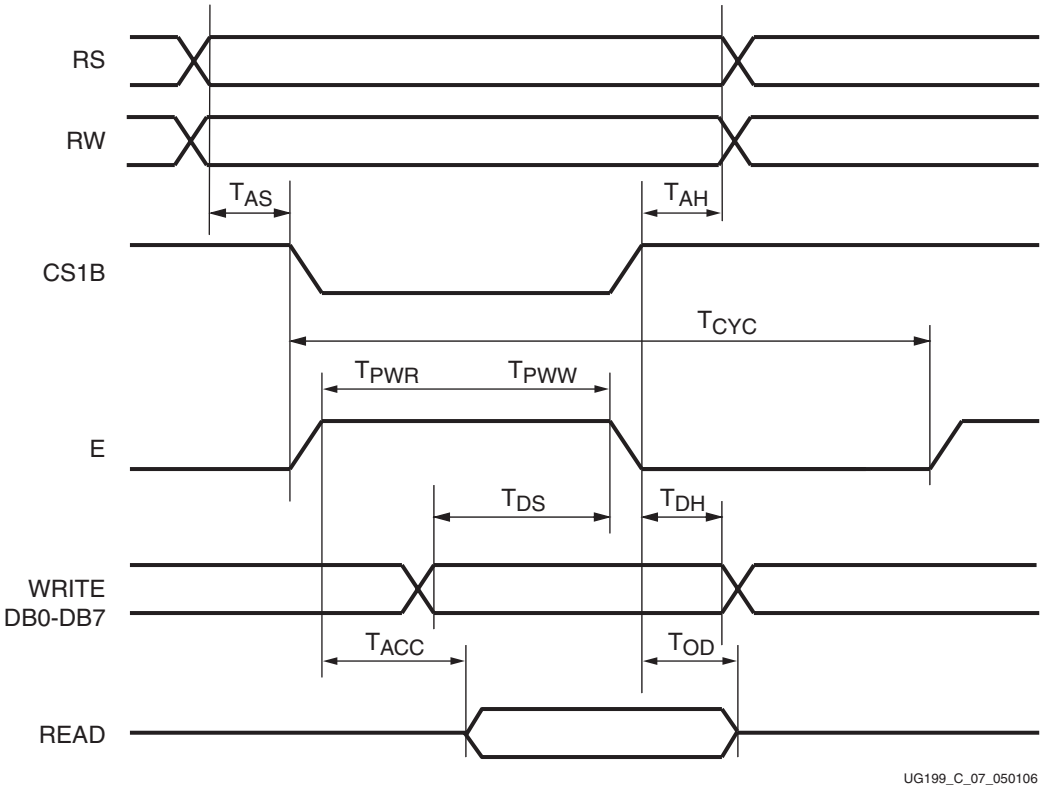

Figure C-7: **Read/Write Timing Waveforms (6800 Mode)**

Design Examples

LCD Panel Used in Full Graphics Mode

The LCD controller RAM has eight 132-byte pages (in fact, there are nine pages; page 9 is special). Each page is one byte wide. If all the pages are put in one memory block, the needed space is 8 pages x 8 bits x 132 pixels or 8448 bits (1056 bytes).

One Virtex-5 FPGA block RAM can be configured as 8+1 by 2048.

One block RAM can be used to store one complete pixel view of the LCD panel. There is enough space left for commands.

The ninth bit in the block RAM indicates whether the data in the block RAM is real data to be displayed or is a command for the controller.

The interface to the LCD panel is slow. The E signal can be used as the controller clock signal. This signal has a minimum cycle time of 400 ns for displaying 8 bits (equal to 8 dots) on the LCD. One full page of the display takes up to 132 x 400 ns = 52.8 µs. Updating the full display takes 52.8µs x 8 = 423µs.

If using the dual port and data width capabilities of the block RAM, then writes to the block RAM can be 32 bits (+4 control bits), and reads from the block RAM on the LCD side can be 8 bits (1 control bit). An entire LCD page is updated in 33 write operations.

The interface on the LCD panel side sequentially reads the block RAM, and thus, updates the screen contiguously (like a television screen). The controller (microcontroller or other) side of the block RAM can be written at any time.

The write operation happens on the rising edge of the clock and the read (LCD update) happens on the falling edge of the clock. Normally write and read operations at the same address give corrupt read data when the read and write clock edges do not respect the clock-to-clock setup timing. This problem is solved by using both edges of the clock.

A state machine provides correct timing of the signals on the LCD panel side. The panel can be used in write-only mode or in read/write mode. Most of the time, LCD panels operate in write-only mode.

At first, the block RAM must be initialized with some data (instructions to the LCD) to make the LCD operate correctly. Figure C-8 illustrates a general block diagram of the LCD panel in full graphics mode.

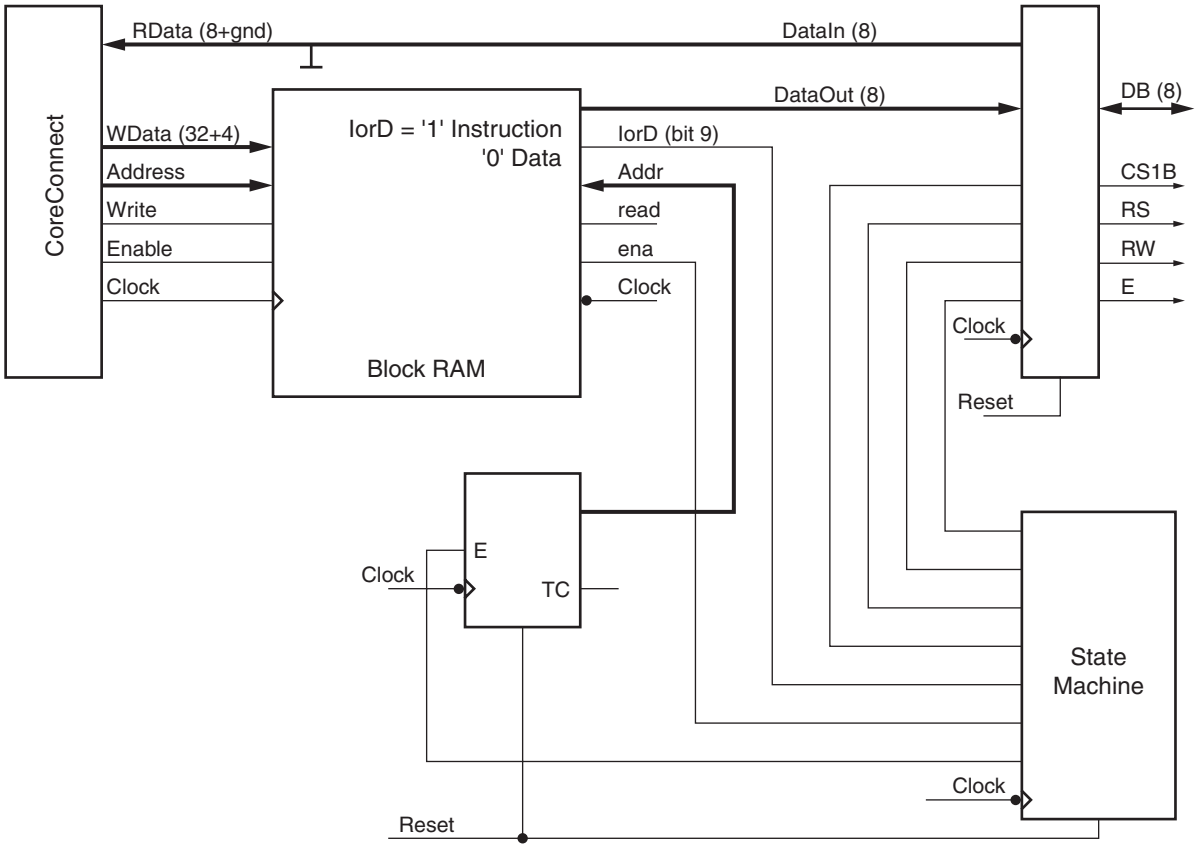

Figure C-8: **General Block Diagram of LCD Panel in Full Graphics Mode**

LCD Panel Used in Character Mode

This design example requires a byte representing a command or data to be displayed as input.

- When the Enable signal is Low, nothing happens. The display interface design is locked.
- When the Enable signal is High and the data_or_command control signal is Low, the byte written is a display command.
- When the Enable signal and the data_or_command control signal are High, the byte written is the ASCII character code of the character to be put on the display.

Display Command Byte

The command set of the display can be found in Table C-6, page 130.

When the LCD interface is enabled for the first time, a set of command bytes is sent to the LCD. This command set provides the basic initialization of the LCD controller. When this initialization is done, the normal LCD interface is freed for normal use. Command bytes from the valid command set can be sent to the display (controller).

The `Toplevel.vhd.txt` file provides a detailed description of the LCD controller interface.

Display Data Byte

The supplied byte must be a valid ASCII representation of a character as shown in Figure C-9.

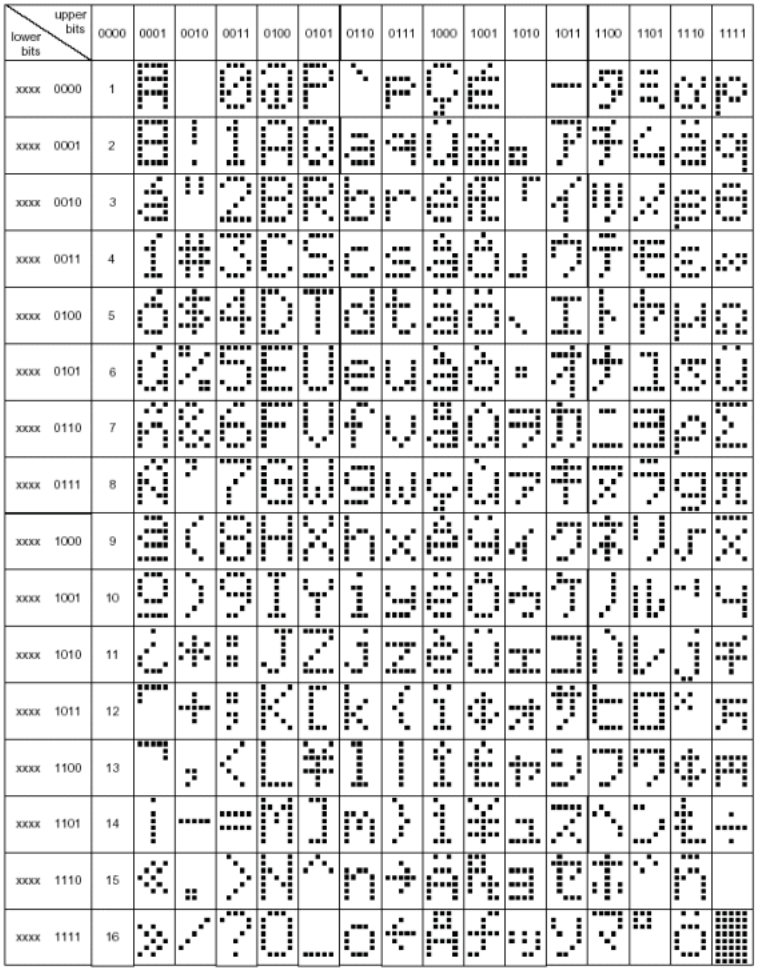

Figure C-9: **ASCII Character Representations**

The character set is stored in block RAM (used as ROM). The `CharacterSet.xls` file contains the layout of the block RAM character set. The block RAM (see Figure C-10) is organized as small arrays of eight bytes, which is easy for address calculation.

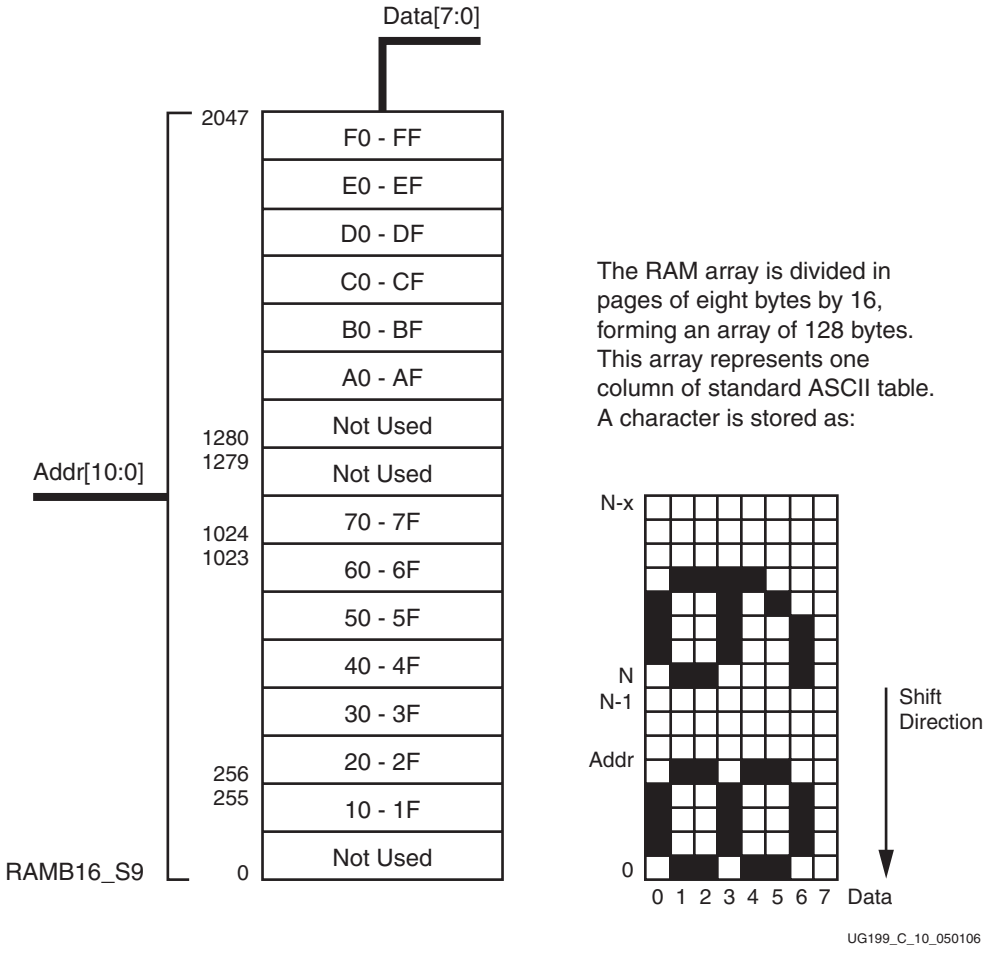

Figure C-10: **Block RAM Organization**

When presenting byte value 30 hex, character *0* must be displayed. Shifting the value 00110000b (30h) up three positions gives the value 180h or 348d.

Because each character uses eight byte locations, character *0* in the character set starts from memory location 348 decimal.

For example, character *X* has byte value 58h or 01011000b. Shifting this value three positions gives the value 2C0h or 704d.

Figure C-11 shows a block diagram of the LCD character generator controller. Character data is latched and then shifted left three positions. This shifted value is the start byte for a counter that outputs an address to the block RAM. The result is a stream of bytes representing a character for the display.

A small second counter determines when a new character is loaded into the block RAM address counter.

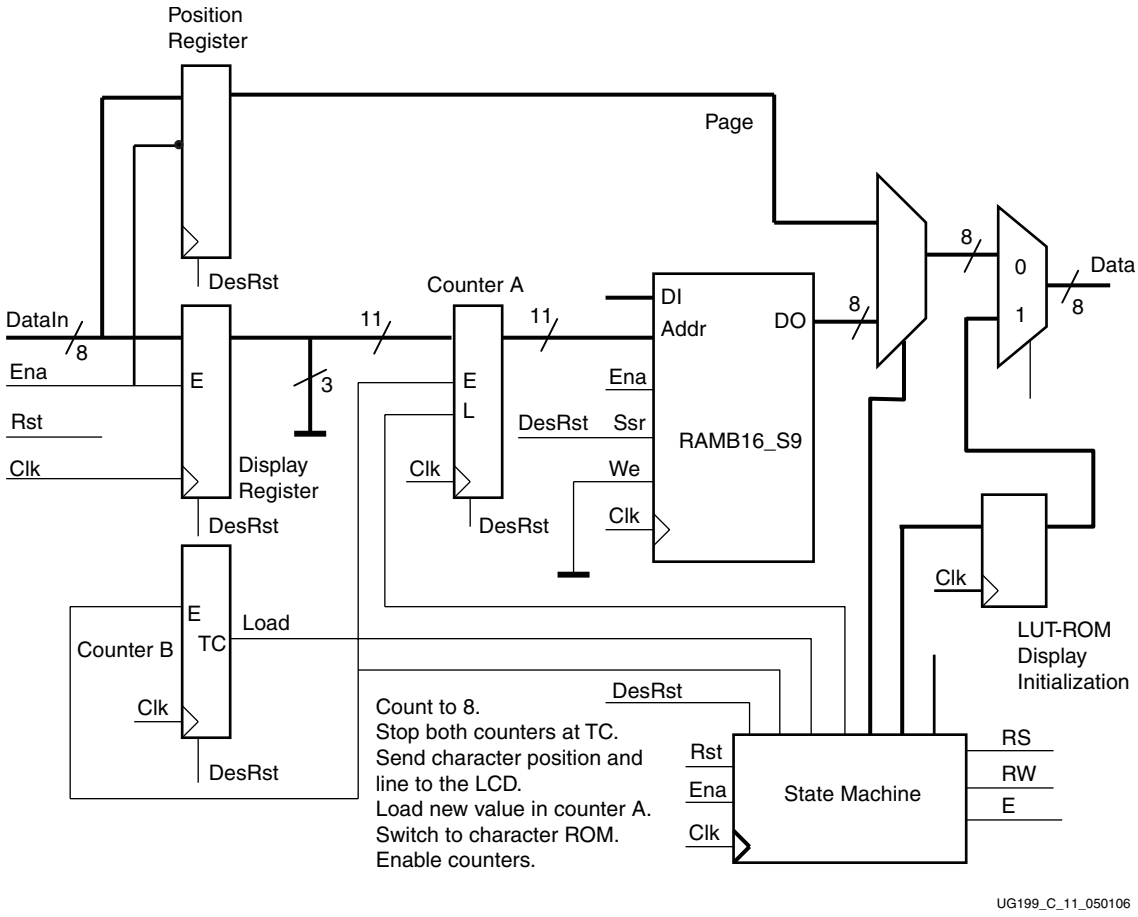

Figure C-11: **LCD Character Generator Controller**

A state machine manages the processing order.

A minimum cycle time of 400 ns on the E signal used as a reference. The 200 MHz system clock frequency is used as reference system clock. One E cycle uses at least 80 system clock cycles when the design is running at 200 MHz. The E pulse is part of the state machine, and the design only depends on the system clock. Timing is met as long as the system clock does not exceed 200 MHz.

This design can be adapted easily to fit the MicroBlaze™ or PPC405 CoreConnect bus system.

Array Connector Numbering

Figure C-12 shows the LCD connections for Bank 0.

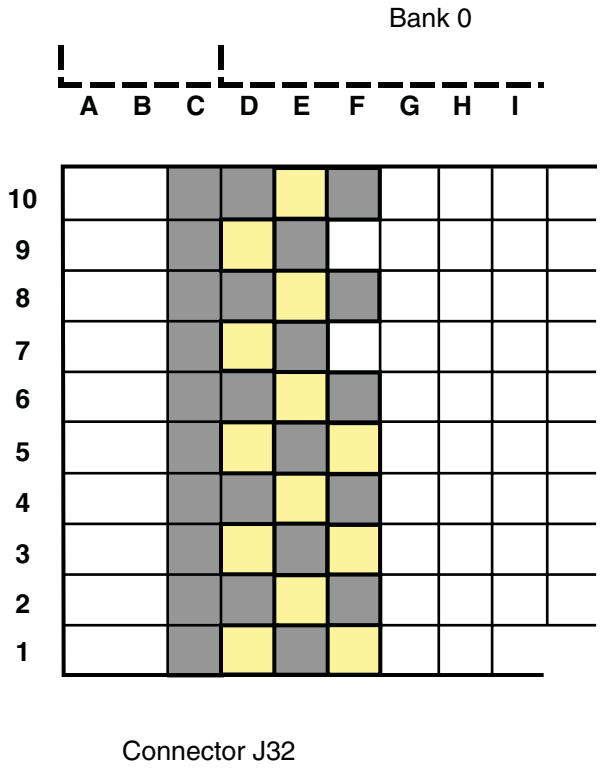

Connector Pin	
D9	LCD_D0
D7	LCD_D4
D5	LCD_D5
D3	LCD_D6
D1	LCD_D7
E10	LCD_RST
E8	LCD_D1
E6	LCD_D2
E4	LCD_D3
E2	LCD_ENA
F5	LCD_R/W
F3	LCD_RSEL
F1	LCD_CS1B

UG199_C_12_050106

Figure C-12: **LCD Connections (Bank 0)**