FEATURING
Extended Commercial Temperature Range
-20°C to 70°C
for Portable Handheld Equipment

July 2000

ML4863*

High Efficiency Flyback Controller

GENERAL DESCRIPTION

The ML4863 is a flyback controller designed for use in multi-cell battery powered systems such as PDAs and notebook computers. The flyback topology is ideal for systems where the battery voltage can be either above or below the output voltage, and where multiple output voltages are required.

The ML4863 uses the output voltage as the feedback control signal to the current mode variable frequency flyback controller. In addition, a synchronous rectifier control output is supplied to provide the highest possible conversion efficiency (greater than 85% efficiency over a 1mA to 1A load range).

The ML4863 has been designed to operate with a minimum number of external components to optimize space and cost.

FEATURES

- Variable frequency current mode control and synchronous rectification for high efficiency
- Minimum external components
- Guaranteed start-up and operation over a wide input voltage range (3.15V to 15V)
- High frequency operation (>200kHz) minimizes the size of the magnetics
- Flyback topology allows multiple outputs in addition to the regulated 5V
- Built-in overvoltage and current limit protection

*Some Packages Are Obsolete

BLOCK DIAGRAM

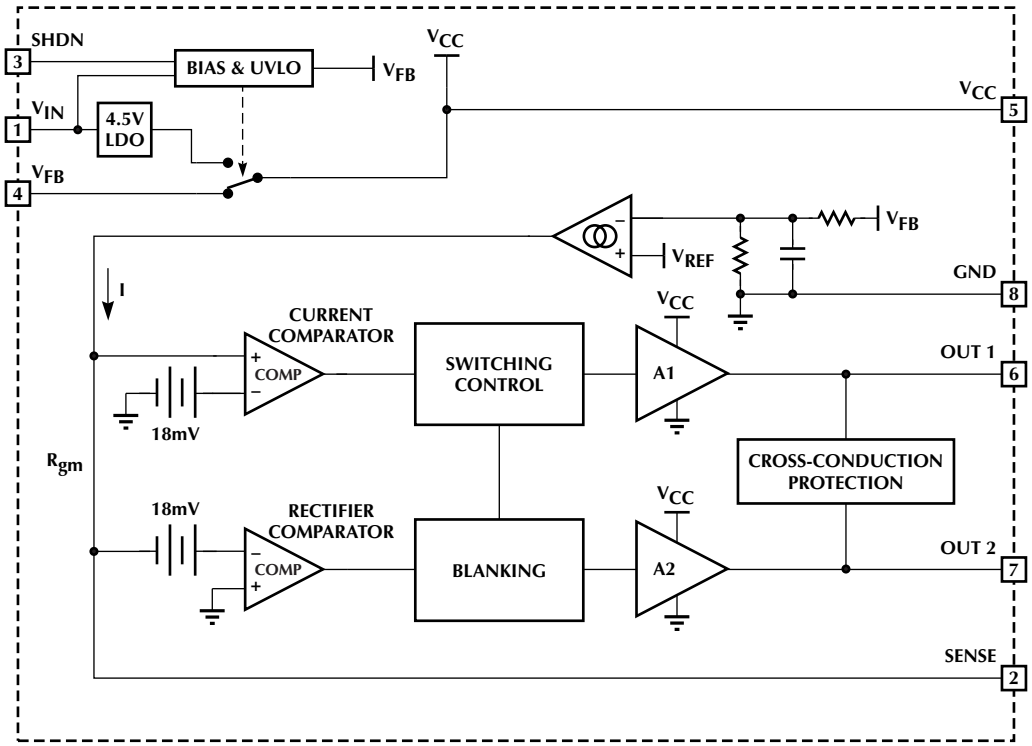

PIN CONFIGURATION

ML4863
8-Pin SOIC (S08)

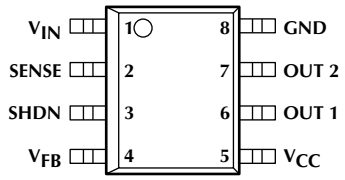

TOP VIEW

PIN DESCRIPTION

PIN	NAME	FUNCTION
1	V_{IN}	Battery input voltage
2	SENSE	Secondary side current sense
3	SHDN	Pulling this pin high initiates a shutdown mode to minimize battery drain
4	V_{FB}	Feedback input from transformer secondary, and supply voltage when $V_{OUT} > 4.5V$
5	V_{CC}	Internal power supply node for connection of a bypass capacitor
6	OUT 1	Flyback primary switch MOSFET driver output
7	OUT 2	Flyback synchronous rectifier MOSFET driver output
8	GND	Analog signal ground

ABSOLUTE MAXIMUM RATINGS

Absolute maximum ratings are those values beyond which the device could be permanently damaged. Absolute maximum ratings are stress ratings only and functional device operation is not implied.

V_{IN} ..... GND – 0.3V to 18V
Voltage on any other pin ..... GND – 0.3V to 7V
Source or Sink Current (OUT1 & OUT2) 1A
Junction Temperature 150ºC
Storage Temperature Range ..... –65ºC to 150ºC
Lead Temperature (Soldering 10 Sec.) 260ºC
Thermal Resistance (θ_{JA}) 160ºC/W

OPERATING CONDITIONS

Temperature Range
ML4863CS ..... 0ºC to 70ºC
ML4863ES ..... –20ºC to 70ºC
ML4863IS ..... –40ºC to 85ºC
V_{IN} Operating Range ..... 3.15V to 15V

ELECTRICAL CHARACTERISTICS

Unless otherwise specified, V_{IN} = 12V, T_A = Operating Temperature Range (Note 1)

SYMBOL	PARAMETER	CONDITIONS		MIN	TYP	MAX	UNITS
OSCILLATOR							
t_{ON}	ON Time		C Suffix	2.1	2.5	2.8	µs
			E/I Suffix	2.1	2.5	2.95	µs
	Minimum Off Time	V_{FB} = 0V		450	650	850	ns
V_{FB} REGULATION							
	Total Variation	Line, Load, & Temp		4.85	5	5.15	V
OUTPUT DRIVERS							
	OUT1 Rise Time	C_{LOAD} = 3nF, 20% to 90% of V_{CC}			60	70	ns
	OUT1 Fall Time	C_{LOAD} = 3nF, 90% to 20% of V_{CC}			60	70	ns
	OUT2 Rise Time	C_{LOAD} = 3nF, 20% to 90% of V_{CC}			60	70	ns
	OUT2 Fall Time	Continuous Mode, C_{LOAD} = 3nF, 90% to 20% of V_{CC}			60	70	ns
		Discontinuous Mode, C_{LOAD} = 3nF, 90% to 20% of V_{CC}			125	150	ns
SHDN							
	Input High Voltage			2.0			V
	Input Low Voltage					0.8	V
	Input Bias Current	SHDN = 5V			5	10	µA
SENSE							
	SENSE Threshold – Full Load	V_{IN} = 5V, V_{FB} = $V_{FB\ (No\ Load)}$ – 100mV		130	150	160	mV
	SENSE Threshold – Short Circuit	V_{FB} = 0V				235	mV
CIRCUIT PROTECTION							
	Undervoltage Lockout Start-up Threshold				3.0	3.15	V
	Undervoltage Lockout Hysteresis				0.5	0.6	V

ELECTRICAL CHARACTERISTICS (Continued)

SYMBOL	PARAMETER	CONDITIONS	MIN	TYP	MAX	UNITS
SUPPLY						
I_{FB}	V_{FB} Quiescent Current			100	150	µA
I_{IN}	V_{IN} Shutdown Current	SHDN = 5V		20	25	µA
		SHDN = 5V, V_{IN} < 6V		5	10	µA
V_{CC}	V_{CC} Output Voltage	V_{FB} = 0V, V_{IN} = 15V, C_{VCC} = 0.1µF	4.5		5.5	V
		V_{FB} = 0V, V_{IN} = 6V, C_{VCC} = 0.1µF	4.0		5.0	V
		V_{FB} = 0V, V_{IN} = 3.15V, C_{VCC} = 0.1µF	2.8			V
		V_{FB} = 5V	4.5	5	5.15	V

Note 1: Limits are guaranteed by 100% testing, sampling, or correlation with worst case test conditions.

FUNCTIONAL DESCRIPTION

The ML4863 utilizes a flyback topology with constant on-time control. The circuit determines the length of the off-time by waiting for the inductor current to drop to a level determined by the feedback voltage (V_{FB}). Consequently, the current programming is somewhat unconventional because the valley of the current ripple is programmed instead of the peak. The controller automatically enters burst mode when the programmed current falls below zero. Constant on-time control therefore features a transition into and out of burst mode which does not require additional control circuitry.

The control circuit is made up of four distinctive blocks; the constant on-time oscillator, the current programming comparator, the feedback transconductance amplifier, and the synchronous rectifier controller. A simplified circuit diagram is shown in Figure 1.

OSCILLATOR & COMPARATOR

The oscillator has a constant on-time and a minimum off-time. The off-time is extended as long as the output of the current programming comparator is low. Note that in constant on-time control, a discharge (off-time) cycle is needed for the inductor current to be sensed. The minimum off-time is required to account for the finite circuit delays in sensing the inductor output current.

TRANSCONDUCTANCE AMPLIFIER

The feedback transconductance amplifier generates a current from the voltage difference between the output and the reference. This current produces a voltage across R_{gm} that adds to the negative voltage on the current sense resistor, R_{SENSE}. When the current level in the inductor drops low enough to cause the voltage at the non-inverting input of the current programming comparator to go positive, the comparator trips and the converter starts a new on-cycle. The current programming comparator controls the length of the off-time by waiting until the current in the secondary decreases to the value specified by the feedback transconductance amplifier.

In this way, the feedback transconductance amplifier's output current steers the current level in the inductor. When the output voltage drops due to a load increase, it will increase the output current of the feedback amplifier and generate a larger voltage across R_{gm} which in turn raises the secondary current trip level. However, when the output voltage is too high, the feedback amplifier's output current will eventually become negative. Because the output current of the inductor can never go negative by virtue of the diode, the non-inverting input of the comparator will also stay negative. This causes the converter to stop operation until the output voltage drops enough to increase the output current of the feedback transconductance amplifier above zero.

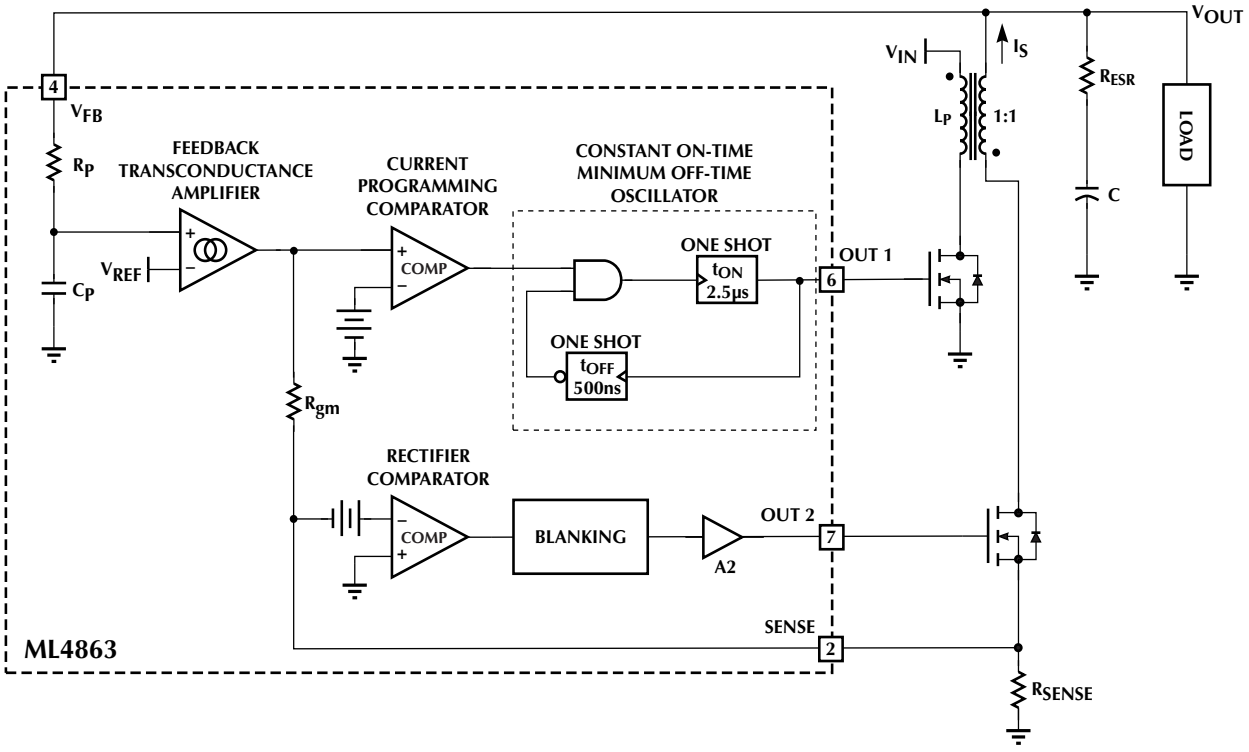

Figure 1. Schematic of the ML4863 Controller and Power Stage

FUNCTIONAL DESCRIPTION (Continued)

SYNCHRONOUS RECTIFIER CONTROL

The control circuitry for the synchronous rectifier does not influence the operation of the main controller. The synchronous rectifier is turned on during the minimum off time, or whenever the SENSE pin is less than –18mV. During transitions where the primary switch is turned on before the voltage on the SENSE pin goes above –18mV, the gate of the synchronous rectifier is discharged softly to avoid accidently triggering the current-mode comparator with the gate discharge spike on the sense resistor.

The part will also operate with a Schottky diode in place of the synchronous rectifier, but the conversion efficiency will suffer.

CURRENT LIMIT AND MODES OF OPERATION

The normal operating range and current limit point are determined by the current programming comparator. They are dependent on the value of the synchronous rectifier current sense resistor (R_{SENSE}), the nominal transformer primary inductance (L_P), and the input voltage.

R_{SENSE} can be calculated by:

$$R_{SENSE} = \frac{V_{IN(MIN)}}{V_{OUT} + V_{IN}} \times \left(\frac{150mV}{I_{OUT(MAX)}} + \frac{V_{IN(MIN)}}{20 \times V_{IN(MAX)} \times I_{OUT(MAX)}} \right) \times \eta \quad (1)$$

where η = converter efficiency.

Once R_{SENSE} has been determined, L_P can be found:

$$L_P = (25 \times 10^{-6}) \times V_{IN(MAX)} \times R_{SENSE} \quad (2)$$

Three operational modes are defined by the voltage at the SENSE pin at the end of the off-time: discontinuous mode, continuous mode, and current limit. The following values can be used to determine the current levels of each mode:

$V_{SENSE} < 0V$: discontinuous mode

$0V < V_{SENSE} < 160mV$: continuous mode

$160mV < V_{SENSE} < 235mV$: current limit

Inserting the maximum value of V_{SENSE} for each operational mode into the following equation will determine the maximum current levels for each operational mode:

$$I_{OUT} = \frac{V_{IN}}{V_{OUT} + V_{IN}} \times \left(\frac{V_{SENSE}}{R_{SENSE}} + \frac{t_{ON} \times V_{IN}}{2 \times L_P} \right) \times \eta \quad (3)$$

DESIGN CONSIDERATIONS

DESIGN PROCEDURE

A typical design can be implemented by using the following procedure.

1. Specify the application by defining:

   The maximum input voltage ($V_{IN(MAX)}$)
   The mainimum input voltage ($V_{IN(MIN)}$)
   The maximum output current ($I_{OUT(MAX)}$)
   The maximum output ripple (ΔV_{OUT})

As a general design rule, the output ripple should be kept below 100mV to ensure stability.

2. Select a sense resistor, R_{SENSE}, using equation 1.

3a. Determine the inductance required for the optimum output ripple using equation 2.

3b. Determine the minimum inductor current rating required. The peak inductor current is calculated using the following formula:

$$I_{L\,PEAK} = \frac{235mV}{R_{SENSE}} + \frac{V_{IN\,(MAX)} \times (2.5 \times 10^{-6})}{L_P} \quad (4)$$

3c. Specify the inductor's DC winding resistance. A good rule of thumb is to allow 5mΩ, or less, of resistance per µH of inductance. For minimum core loss, choose a high frequency core material such as Kool-Mu, ferrite, or MPP.

3d. Specify the coupled inductor's turns ratio:

Np : Ns = 1:1

4a. Calculate the minimum output capacitance required using:

$$C = I_{OUT\,(MAX)} \times \left(\frac{V_{OUT} + V_{IN\,(MAX)}}{V_{OUT}} \right) \times \frac{2.5 \times 10^{-6}}{\Delta V_{OUT}} \quad (5)$$

4b. Establish the maximum allowable ESR for the ouput capacitor:

$$R_{ESR} < \frac{\Delta V_{OUT} \times R_{SENSE}}{150mV} \quad (6)$$

5. As a final design check, evaluate the system stability (no compensation, single pole response) by using the following equation:

$$\Delta V_{OUT} \leq (6 \times 10^{-6}) \times \left[\frac{R_{SENSE} \times (V_{OUT} + V_{IN\,(MIN)})}{L_P} \right] \quad (7)$$

where R_{SENSE} and L_P are the actual values to be used.

See Table 1 for suggested component manufacturers.

Component	Manufacturer	Part Number	Phone
Sense Resistors	Dale	LRC Series	(402) 563-6506
	IRC	WSL Series	(512) 992-7900
Inductors	Coilcraft	R4999	(847) 639-6400
	Coiltronics	OCTA-PAC Series	(561)241-7876
	Dale	LPE-6562 Series LPT-4545 series	(605) 665-9301
Capacitors	AVX	TPS series	(207) 282-5111
	Sprague	593D Series	(207) 324-4140
MOSFETs	National	NDS94XX NDS99XX	(800) 272-9954
	Motorola	MMDF Series MMSF Series	(602) 897-5056
	Siliconix	Littlefoot Series	(408) 988-8000

Table 1. Component Suppliers

DESIGN EXAMPLE

1. Specify the application by defining:
   $V_{IN(MAX)}$ = 6V
   $V_{IN(MIN)}$ = 4V
   $I_{OUT(MAX)}$ = 500mA
   ΔV_{OUT} = 100mV

2. Select the sense resistor, R_{SENSE}, using Equation 1:

$$R_{SENSE} = \frac{4}{5+4} \times \left(\frac{150mV}{500mA} + \frac{4V}{20 \times 6 \times 0.5} \right) \times 0.85 \quad (1a)$$

R_{SENSE} = 138mΩ ≅ 120mΩ

3a. Determine the inductance required using equation 2.

$$L_P = (25 \times 10^{-6}) \times 6 \times 0.12 = 18\mu H \quad (2a)$$

3b. Determine the minimum inductor current rating required.

$$I_{L\,PEAK} = \frac{235mV}{120m\Omega} + \frac{6 \times (2.5 \times 10^{-6})}{18 \times 10^{-6}} = 2.79A \quad (4a)$$

DESIGN CONSIDERATIONS (Continued)

3c. Specify the inductor's DC winding resistance:

L_{DCR} = 90mΩ

3d. Specify the coupled inductor's turn ratio:

Np : Ns = 1:1

4a. Calculate the minimum output capacitance required using equation 5.

$$C = 0.50 \times \left(\frac{5+6}{5}\right) \times \frac{2.5 \times 10^{-6}}{0.1} = 55\mu F \quad (5a)$$

4b. Establish the maximum ESR for the output capacitor using equation 6.

$$R_{ESR} < \frac{0.1 \times 0.12}{150mV} = 80m\Omega \quad (6a)$$

Based on these calculations, the design should use two 100µF capacitors, with an ESR of 100mΩ each, in parallel to meet the capacitance and ESR requirements.

5. As a final design check, evaluate the system stability using equation 7.

$$100mV \le (6 \times 10^{-6}) \times \left[\frac{0.12 \times (5+4)}{18 \times 10^{-6}}\right] = 360mV \quad (7a)$$

Since the inequality is met, the circuit should be stable.

Some typical application circuits are shown in Figures 2, 3, and 4.

LAYOUT

Good PC board layout practices will ensure the proper operation of the ML4863. Important layout considerations follow:

- The connection from the current sense resistor to the SENSE pin of the ML4863 should be made by a separate trace and connected right at the sense resistor lead.
- The V_{CC} bypass capacitor needs to be located close to the ML4863 for adequate filtering of the IC's internal bias voltage.
- Trace lengths from the capacitors to the inductor, and from the inductor to the FET should be as short as possible to minimize noise and ground bounce.
- Power and ground planes must be large enough to handle the current the converter has been designed for.

See Figure 5 for a sample PC board layout.

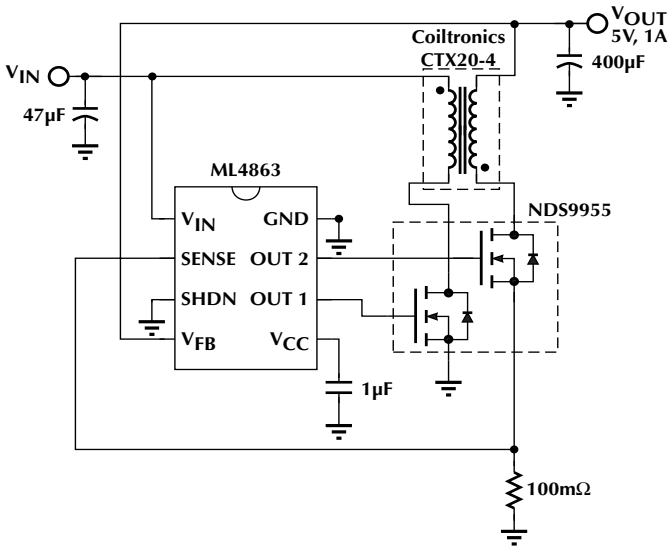

Figure 2. 5V, 1A Circuit

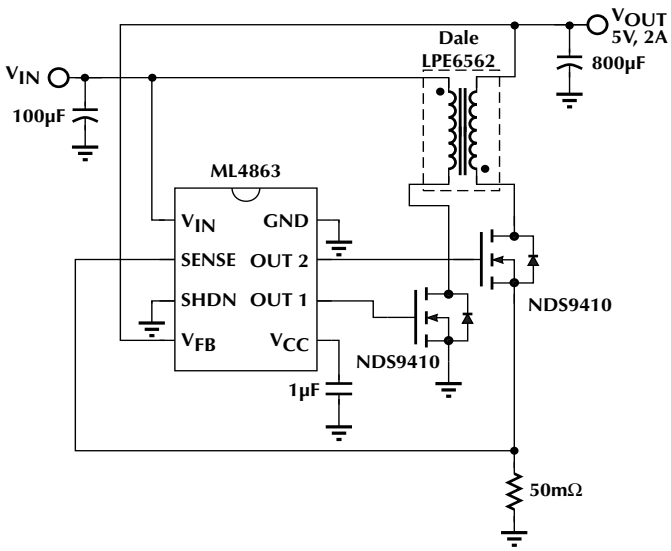

Figure 3. 5V, 2A Circuit

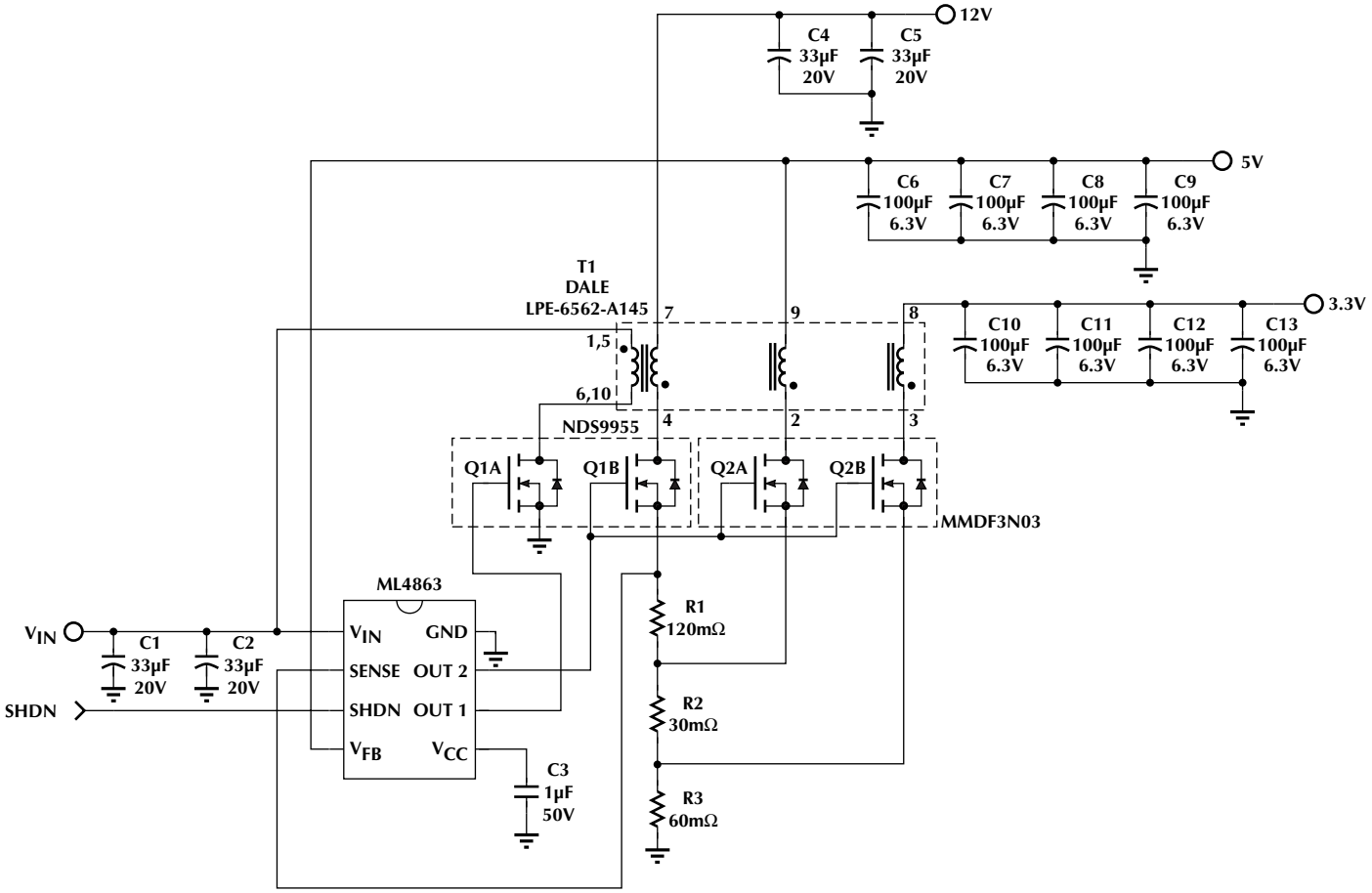

Figure 4. 5W Multiple Output DC-DC Converter

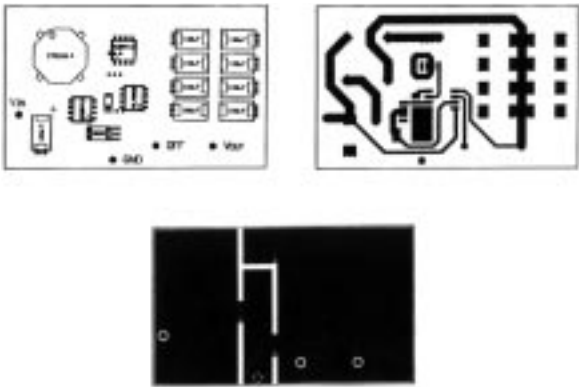

Figure 5. Typical PC Board Layout

PHYSICAL DIMENSIONS inches (millimeters)

Package: S08
8-Pin SOIC

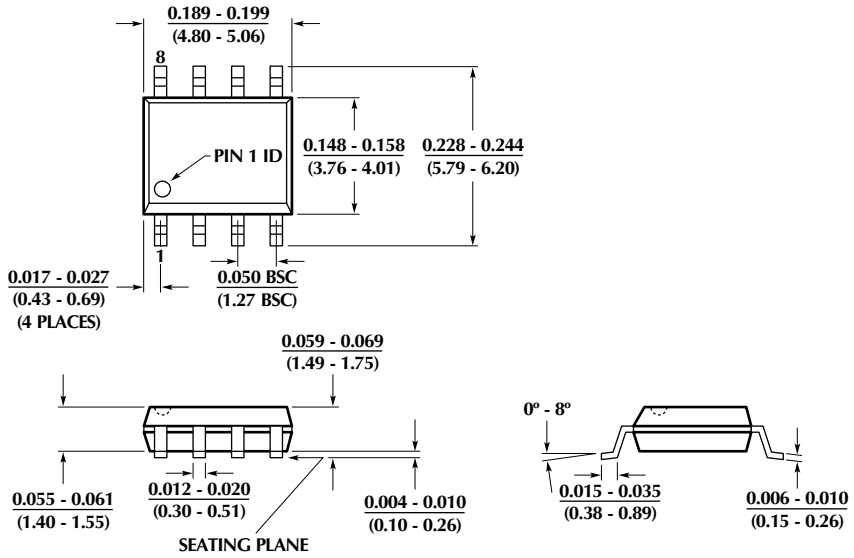

ORDERING INFORMATION

PART NUMBER	TEMPERATURE RANGE	PACKAGE
ML4863CS	0°C to 70°C	8-Pin SOIC (S08)
ML4863ES	–20°C to 70°C	8-Pin SOIC (S08)
ML4863IS (Obsolete)	–40°C to 85°C	8-Pin SOIC (S08)

© Micro Linear 1997. is a registered trademark of Micro Linear Corporation. All other trademarks are the property of their respective owners.

Products described herein may be covered by one or more of the following U.S. patents: 4,897,611; 4,964,026; 5,027,116; 5,281,862; 5,283,483; 5,418,502; 5,508,570; 5,510,727; 5,523,940; 5,546,017; 5,559,470; 5,565,761; 5,592,128; 5,594,376; 5,652,479; 5,661,427; 5,663,874; 5,672,959; 5,689,167. Japan: 2,598,946; 2,619,299; 2,704,176. Other patents are pending.

Micro Linear reserves the right to make changes to any product herein to improve reliability, function or design. Micro Linear does not assume any liability arising out of the application or use of any product described herein, neither does it convey any license under its patent right nor the rights of others. The circuits contained in this data sheet are offered as possible applications only. Micro Linear makes no warranties or representations as to whether the illustrated circuits infringe any intellectual property rights of others, and will accept no responsibility or liability for use of any application herein. The customer is urged to consult with appropriate legal counsel before deciding on a particular application.

2092 Concourse Drive
San Jose, CA 95131
Tel: 408/433-5200
Fax: 408/432-0295
www.microlinear.com