ML10ORW Series

Ultra-Compact, 1W Wide 2:1 Input, SMT DC/DC Converters

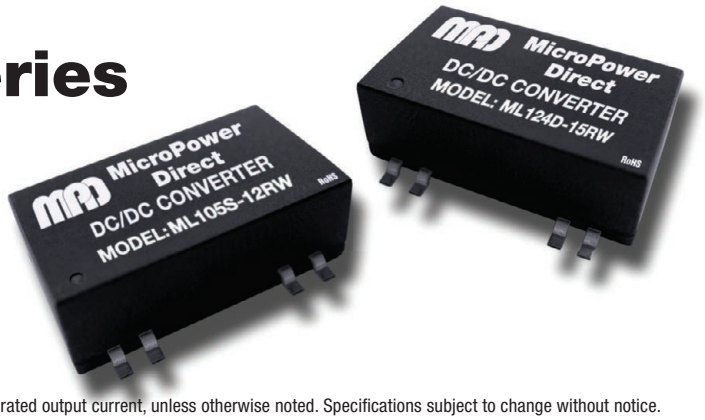

Key Features:

- 1W Output Power
- Ultra-Compact SMT Case
- Wide 2:1 Input
- 1,500 VDC Isolation
- Single & Dual Outputs
- -40°C to +85°C Operation
- 20 Standard Models
- Tight Line/Load Regulation
- Available on Tape/Reel

RoHS

Tape & Reel

Electrical Specifications

Specifications typical @ +25°C, nominal input voltage & rated output current, unless otherwise noted. Specifications subject to change without notice.

Input

Parameter	Conditions	Min.	Typ.	Max.	Units
Input Voltage Range	5 VDC Input	4.5	5.0	9.0	VDC
	12 VDC Input	9.0	12.0	18.0	
	24 VDC Input	18.0	24.0	36.0	
	48 VDC Input	36.0	48.0	75.0	
Start Up Voltage	5 VDC Input			4.5	VDC
	12 VDC Input			9.0	
	24 VDC Input			18.0	
	48 VDC Input			36.0	
Input Filter	Capacitor				

Output

Parameter	Conditions	Min.	Typ.	Max.	Units
Output Voltage Accuracy	At 50% Load			±1.0	%
Line Regulation	For V_{IN} = Min to Max			±0.2	%
Load Regulation	For I_{OUT} = Min to Max			±1.0	%
	Single: For I_{OUT} = 10% to 100%			±0.5	
	Dual: For I_{OUT} = 10% to 100%			±0.8	
Ripple & Noise (20 MHz)	See Note 2		30		mV P - P
Transient Response Time, See Note 3	25% Load Step Change		250		µS
Transient Response Deviation	25% Load Step Change		±3		%
Temperature Coefficient				±0.02	%/°C
Output Short Circuit	Continuous (Autorecovery)				

General

Parameter	Conditions	Min.	Typ.	Max.	Units
Isolation Voltage	60 Seconds	1,500			VDC
Isolation Resistance	500 VDC	1,000			MΩ
Isolation Capacitance	100 kHz, 1V			50	pF
Switching Frequency			220		kHz

Remote On/Off

Parameter	Conditions	Min.	Typ.	Max.	Units
Supply On		Open or High Impedance			
Supply Off	See Note 4	2.0		4.0	mA
Standby Input Current			2.5		mA

Environmental

Parameter	Conditions	Min.	Typ.	Max.	Units
Operating Temperature Range	Ambient	-40		+85	°C
Operating Temperature Range	Case			+95	°C
Storage Temperature Range		-50		+125	°C
Cooling	Free Air Convection				
Humidity	RH, Non-condensing			95	%

Physical

Case Size	See Mechanical Drawing (Page 2)
Case Material	Non-Conductive Black Plastic (UL94-V0)
Weight	0.15 Oz (4.5g)

Reliability Specifications

Parameter	Conditions	Min.	Typ.	Max.	Units
MTBF	MIL HDBK 217F, 25°C, Gnd Benign	2.80			MHours
Moisture Sensitivity Level (MSL)	IPC/JEDEC J-STD-020D Level 2				

Absolute Maximum Ratings

Parameter	Conditions	Min.	Typ.	Max.	Units
Input Voltage Surge (1 Sec)	5 VDC Input	-0.7		15.0	VDC
	12 VDC Input	-0.7		25.0	
	24 VDC Input	-0.7		50.0	
	48 VDC Input	-0.7		100.0	
Peak Reflow Temperature	See Note 5			245	°C
Lead Temperature	1.5 mm From Case For 10 Sec.			260	°C

Caution: Exceeding Absolute Maximum Ratings may damage the module. These are not continuous operating ratings.

MicroPower Direct
292 Page Street
Suite D
Stoughton, MA 02072
USA

T: (781) 344-8226
F: (781) 344-8481
E: sales@micropowerdirect.com
W: www.micropowerdirect.com

Model Selection Guide

Model Number	Input				Output			Efficiency (%, Typ)	Output Capacitive Load (µF, Max)	Fuse Rating Slow-Blow (mA)
	Voltage (VDC)		Current (mA)		Voltage (VDC)	Current (mA, Max)	Current (mA, Min)			
	Nominal	Range	Full-Load	No-Load						
ML105S-05RW	5.0	4.5 - 9.0	256	40	5.0	200	0.0	78	1,680	500
ML105S-12RW	5.0	4.5 - 9.0	252	40	12.0	83	0.0	79	820	500
ML105S-15RW	5.0	4.5 - 9.0	248	40	15.0	67	0.0	81	680	500
ML105D-12RW	5.0	4.5 - 9.0	255	40	±12.0	±42	±0.0	79	470	500
ML105D-15RW	5.0	4.5 - 9.0	248	40	±15.0	±33	±0.0	80	330	500
ML112S-05RW	12	9.0 - 18.0	105	20	5.0	200	0.0	79	1,680	200
ML112S-12RW	12	9.0 - 18.0	105	20	12.0	83	0.0	79	820	200
ML112S-15RW	12	9.0 - 18.0	102	20	15.0	67	0.0	82	680	200
ML112D-12RW	12	9.0 - 18.0	104	20	±12.0	±42	±0.0	81	470	200
ML112D-15RW	12	9.0 - 18.0	103	20	±15.0	±33	±0.0	80	330	200
ML124S-05RW	24	18.0 - 36.0	53	10	5.0	200	0.0	79	1,680	100
ML124S-12RW	24	18.0 - 36.0	51	10	12.0	83	0.0	82	820	100
ML124S-15RW	24	18.0 - 36.0	51	10	15.0	67	0.0	82	680	100
ML124D-12RW	24	18.0 - 36.0	51	10	±12.0	±42	±0.0	82	470	100
ML124D-15RW	24	18.0 - 36.0	50	10	±15.0	±33	±0.0	82	330	100
ML148S-05RW	48	36.0 - 75.0	26	7	5.0	200	0.0	79	1,680	50
ML148S-12RW	48	36.0 - 75.0	26	7	12.0	83	0.0	80	820	50
ML148S-15RW	48	36.0 - 75.0	26	7	15.0	67	0.0	80	680	50
ML148D-12RW	48	36.0 - 75.0	26	7	±12.0	±42	±0.0	81	470	50
ML148D-15RW	48	36.0 - 75.0	25	7	±15.0	±33	±0.0	81	330	50

Notes:

1. The specified maximum capacitive load is for each output.
2. When measuring output ripple, it is recommended that an external 0.47 µF ceramic capacitor be placed from +Vout to -Vout for single output models or from each output to common for dual output models. For noise sensitive applications, the use of 3.3 µF capacitors will reduce the output ripple.
3. Transient recovery is measured to within a 1% error band for a load step change of 75% to 100%.
4. The control input is current controlled. The unit operates when this input is open. When the input is "high" (current is flowing into the pin), the converter shuts down. The input current to this pin should be applied via a 1 kΩ resistor, and kept between 2 mA to 4 mA. Connecting this input directly to ground will not damage the converter.
5. The recommended reflow settings are a peak temperature of 245 °C for a maximum period (Tpk) of 10S and a time above liquidous (TL) of ≤60 seconds at 217 °C. For more information, please contact the factory.
6. Operation at no-load will not damage these units. However, they may not meet all specifications.
7. The converter should be connected to a low ac-impedance source. An input source with a highly inductive impedance may affect the stability of the converter. In applications where the converter output loading is high and input power is supplied over long lines, it may be necessary to use a capacitor on the input to insure start-up.
   In this case, it is recommended that a low ESR (<1.0Ω at 100 kHz) capacitor be mounted close to the converter. For 24V input units a 4.7 µF is recommended and for 48V input models, a 2.2 µF.
8. It is recommended that a fuse be used on the input of a power supply for protection. See the table above for the correct rating.

Derating Curve, All Other Outputs

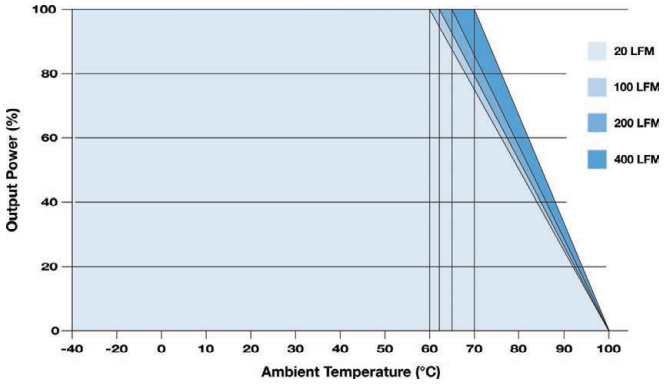

Mechanical Dimensions

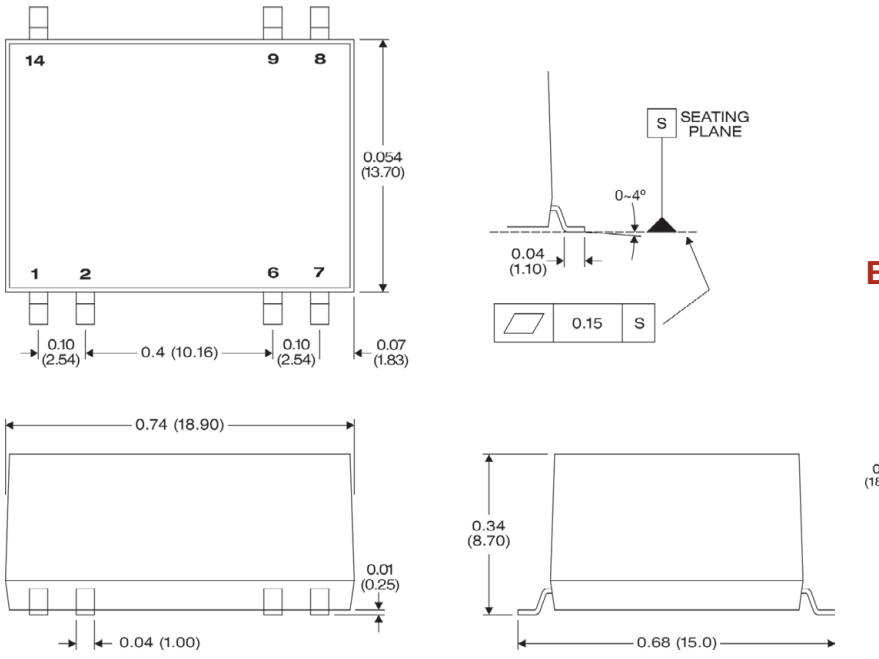

Pin Connections

Pin	Single	Dual
1	-Vin	-Vin
2	Remote On/Off	
7	NC	NC
8	NC	Common
9	+Vout	+Vout
10	-Vout	-Vout
16	+Vin	+Vin

NC = No connection

Board Layout

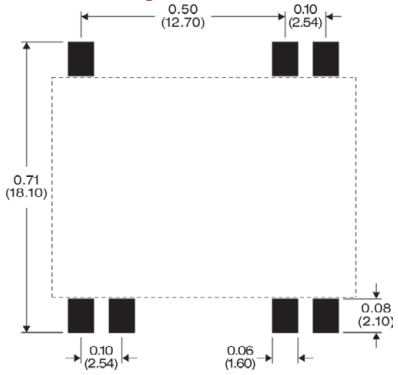

Notes:

- All dimensions are typical in inches (mm)
- Tolerance x.xx = ±0.01 (±0.25)
- Pin 1 is marked by a "dot" or indentation on the unit

MicroPower Direct
We Power Your Success - For Less!
292 Page Street Ste D Stoughton, MA 02072 • TEL: (781) 344-8226 • FAX: (781) 344-8481 • E-Mail: sales@micropowerdirect.com