REVISIONS				
LTR	DESCRIPTION	E.C.N.	DATE	BY/APP'D
A	RELEASE TO DOCUMENT CONTROL	09829	06/21/93	DEG/FL
B	REV LEADS; ADD .000-.006 STAND-OFF & NOTE 5	10152	12/02/93	TL/

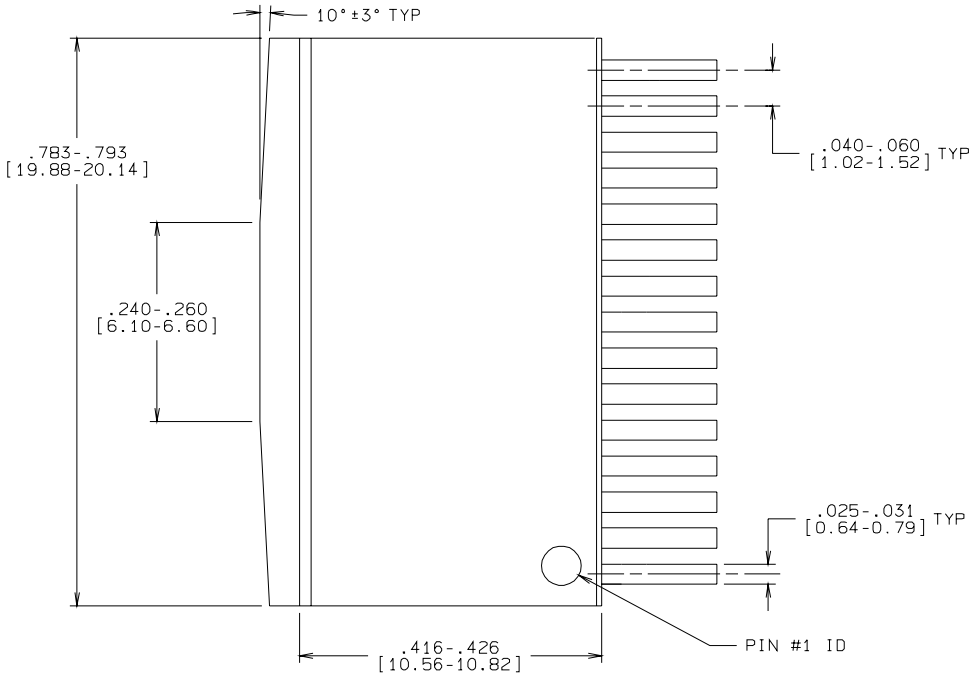

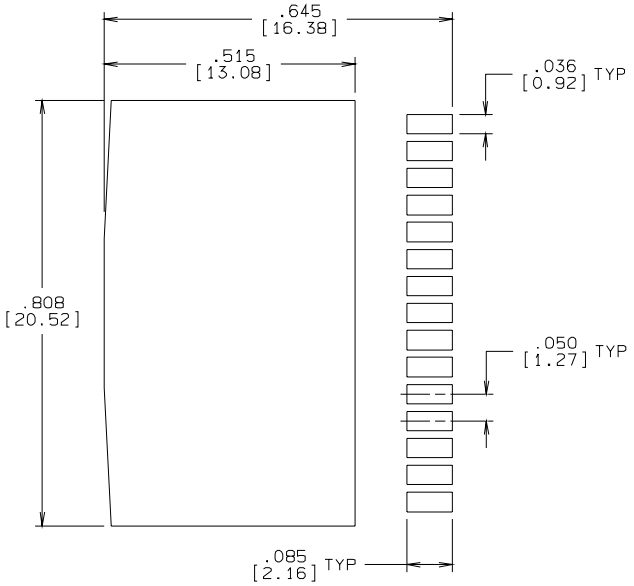

LEAD POSITION OVERLAY

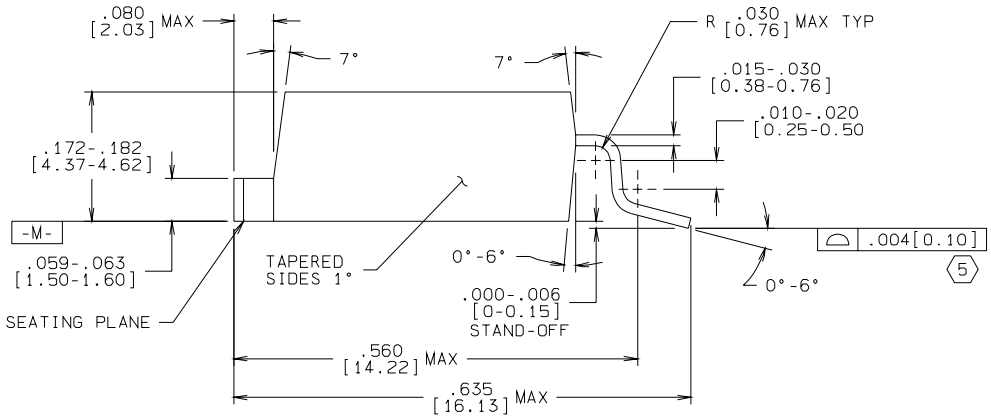

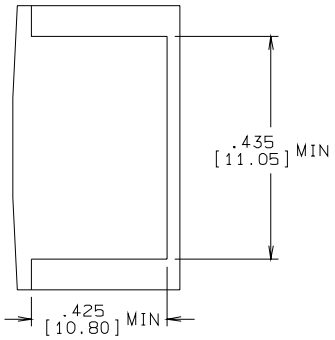

BACK VIEW

CONTROLLING DIMENSION: INCH

NOTES: UNLESS OTHERWISE SPECIFIED

1. STANDARD LEAD FINISH:
   200 MICROINCHES / 5.08 MICROMETERS MINIMUM LEAD/TIN 15/85 ON OLIN 194 COPPER OR EQUIVALENT.
2. MAXIMUM VERTICAL BURR ON HEATSINK NOT TO EXCEED .003 IN/ 0.05 mm.
3. NO PACKAGE CHIPS, CRACKS OR SURFACE INDENTATION ALLOWED AFTER FORMING.
4. JEDEC IS IN PROGRESS FOR BALLOT #10-340 AS OF 6/16/93.

(5) UNDER ALL CONDITIONS, LEAD(S) MUST NOT BE ABOVE DATUM -M- AND NO LEADS MAY BE LOWER THAN .006 IN/ 0.15 mm MEASURED FROM DATUM -M- TO THE BOTTOM OF THE LEADS.

APPROVALS	DATE
DRAWN D.E.GRADY	06/21/93
DFTG. CHK.	
ENGR. CHK.	
APPROVAL	

NATIONAL SEMICONDUCTOR CORPORATION
2900 Semiconductor Drive, Santa Clara, CA 95052-8090

TO-263, MOLDED, 15 LEAD, SURFACE MOUNT

PROJECTION	SCALE	SIZE	DRAWING NUMBER	REV
INCH [MM]	N/A	C	MKT-TS15B	B
	DO NOT SCALE DRAWING		SHEET 1 OF 1	