REV.	DESCRIPTION	DATE
A	NEW DRAWING	7/6/2007

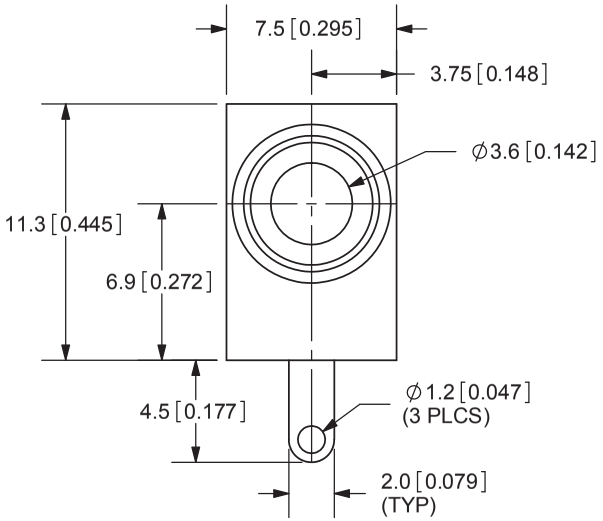

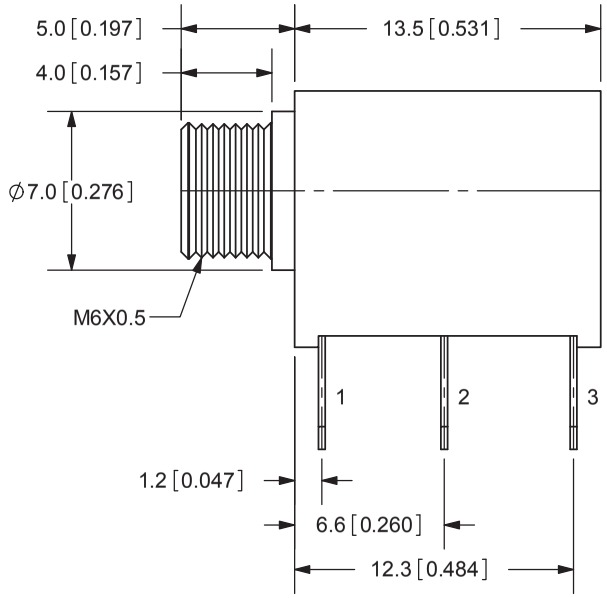

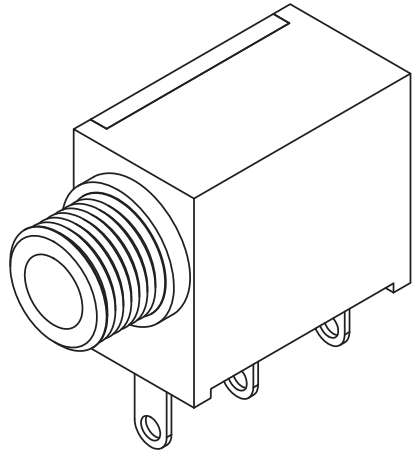

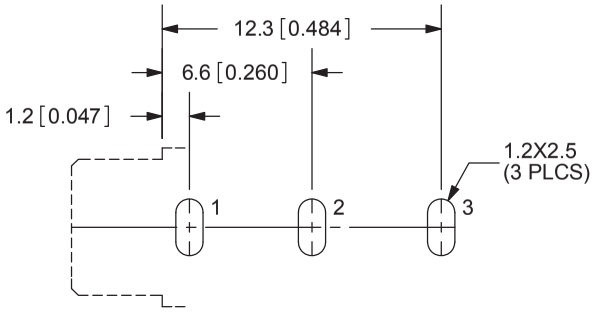

PCB LAYOUT
TOP VIEW

MODEL NO.	MJ-3502
DIA.	THREADED
	M6X0.5
SCHEMATIC	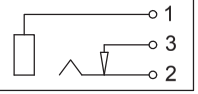

SPECIFICATIONS:
RATING: 12V DC @ 1A
CONTACT RESISTANCE: 30m OHMS MAX
INSULATION RESISTANCE: 100M OHMS MIN: 500V DC
VOLTAGE WITHSTAND: 500V AC R.M.S. FOR 1 MINUTE
LIFE: 5,000 CYCLES
OPERATING TEMP: -20° ~ +85°C

	MATERIAL	PLATING
TERMINAL 1	Brass	Silver
TERMINAL 2	Phosphor Bronze	Silver
TERMINAL 3	Brass	Silver
BARREL	Brass	Nickel
HOUSING	POM	Black Color
COVER	PC	Transparent

TOLERANCE:
±0.3mm UNLESS OTHERWISE SPECIFIED

RoHS

CUI INC
20050 SW 112th Ave.
Tualatin, OR 97062
Phone: 503-612-2300
800-275-4899
Fax: 503-612-2383
Website: www.cui.com

TITLE: 3.5mm AUDIO JACK - MONO	REV: A
PART NO. MJ-3502	UNITS: MM [INCHES]
DRAWN BY: ZRJ	APPROVED BY:
	SCALE: 3:1

PC FILE NAME: MJ-3502

COPYRIGHT 2007 BY CUI INC.

For more information, please visit the product page.