REV.	DESCRIPTION	DATE
A	NEW DRAWING	2/22/2008

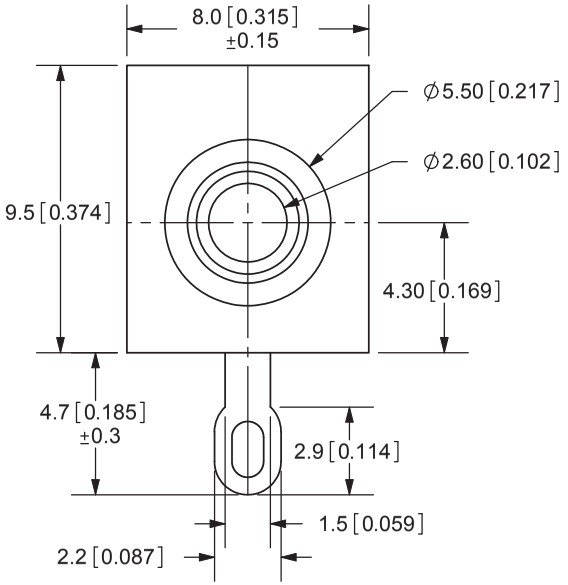

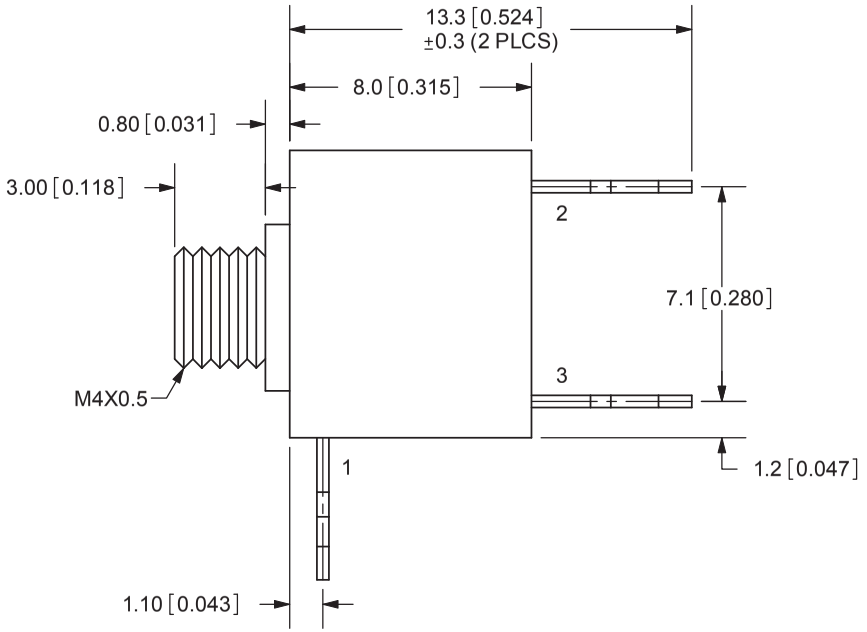

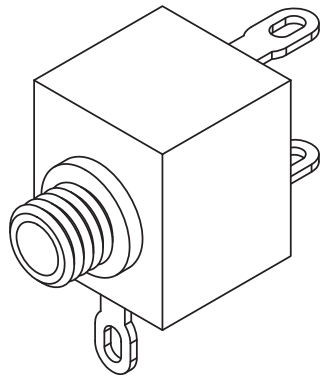

SCALE: 3:1

TOLERANCE:
X.X ±0.2mm
X.XX ±0.1mm
X.XXX ±0.05mm

RoHS

MODEL NO.	MJ-2507
DIA.	THREADED
	M4X0.5
SCHEMATIC	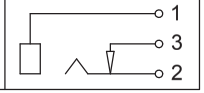

SPECIFICATIONS:
RATING: 12V DC @ 1A
CONTACT RESISTANCE: 30m OHMS MAX
INSULATION RESISTANCE: 50M OHMS MIN: 100V DC
VOLTAGE WITHSTAND: 500V AC R.M.S. FOR 1 MINUTE
LIFE: 5,000 CYCLES
OPERATING TEMP: -25° ~ +85°C

	MATERIAL	PLATING
TERMINAL 1	Brass	
TERMINAL 2	Copper Alloy	
TERMINAL 3	Brass	
BUSHING	Brass	
BODY	PBT	

CUI INC
20050 SW 112th Ave.
Tualatin, OR 97062
Phone: 503-612-2300
800-275-4899
Fax: 503-612-2383
Website: www.cui.com

TITLE: 2.5mm AUDIO JACK-MONO	REV: A
PART NO. MJ-2507	UNITS: MM [INCHES]
DRAWN BY: ZRJ	APPROVED BY:
	SCALE: 4:1

PC FILE NAME: MJ-2507

COPYRIGHT 2008 BY CUI INC.

For more information, please visit the product page.