I/Q Mixer / Modulator — Model MIQ2xMS-2

Communications Band — RF 1.9 to 4.2 GHz

Electrical Specifications: (1)

Parameter	Conditions RF (GHz)	LO (GHz)	IF (MHz)	Specifications Min	Typical	Max
SSB Conversion loss: (2) (3)	2.0-4.2 1.9-4.2	2.0-4.2 1.9-4.2	DC-500 DC-500		5.5 dB 6.0 dB	7.0 dB 7.5 dB
Image Rejection Side-band Suppression: (4)	1.9-2.0 2.0-4.2	1.9-2.0 2.0-4.2	DC-500 DC-500	18 dB 20 dB	26 dB 32 dB	
Amplitude Match	1.9-4.2	1.9-4.2	DC-500		0.2 dB	
Phase Match	1.9-4.2	1.9-4.2	DC-500		2 deg	
Isolation						
LO to RF:		1.9-4.2		34 dB	42 dB	
LO to I/Q:		1.9-4.2			30 dB	
RF to I/Q:	1.9-4.2				24 dB	
I/Q to RF:			DC-500		40 dB	
Input 1 dB Compression Point:	1.9-4.2	1.9-4.2	DC-500		+6 dBm +9 dBm +13 dBm	MIQ24 MIQ26 MIQ27
Input Third Order Intercept Point:	1.9-4.2	1.9-4.2	DC-500		+14 dBm +17 dBm +21 dBm	MIQ24 MIQ26 MIQ27
LO Power: (5)	1.9-4.2	1.9-4.2	DC-500		+10 dBm +13 dBm +17 dBm	MIQ24 MIQ26 MIQ27

Model MIQ2xMS-2

LO Power
4 = +10 dBm
6 = +13 dBm
7 = +17 dBm

Notes:
1. Specifications are guaranteed when tested as a downconverter in a 50 Ohm system at +25˚C with the nominal LO power. Specifications indicated as typical are not guaranteed.
2. Noise figure is typically within ±0.5 dB of conversion loss for IF frequencies greater than 10 MHz.
3. Conversion loss typically degrades less than 0.5 dB at +100˚C and improves less than 0.5 dB at -55˚C. Conversion loss is the combined value.
4. Measured with an IF quadrature hybrid whose amplitude and phase errors are 0.5 dB and 3 degrees maximum. An IF quadrature hybrid is not included.
5. Usable LO drives are up to 2 dB below to 3 dB above nominal.
6. See Application notes M112, for aid in selecting the outline and for mounting and installation information.

MIQ2xMS-2

Outline: MSQ8

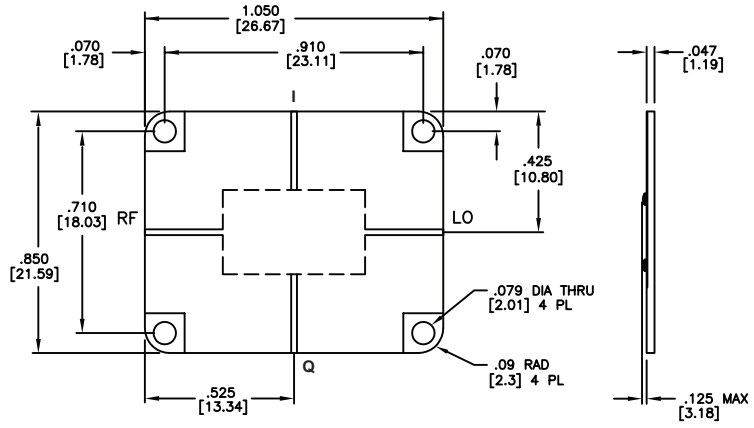

NOTES: (UNLESS OTHERWISE SPECIFIED)
1. LO, RF, AND IF TRACES ARE .02[0.5] WIDE SUITABLE FOR SOLDER ATTACH.

TOLERANCE:
INCHES .XX±.02
.XXX±.010
mm .X±.5
.XX±.25

All dimensions are in inches and [mm].

Typical Performance at 25˚C

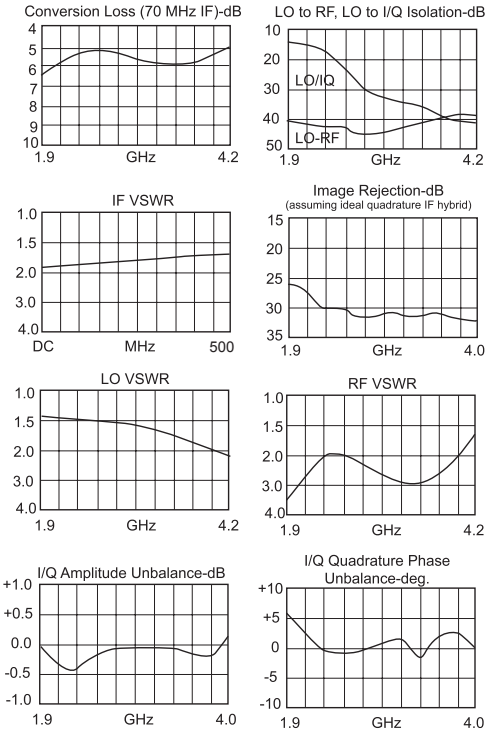

Spectrum Microwave · 2144 Franklin Drive N.E. · Palm Bay, FL 32905 · PH (888) 553-7531 · Fax (888) 553-7532
www.SpectrumMicrowave.com Spectrum Microwave (Europe) · 2707 Black Lake Place · Philadelphia, PA 19154 · PH (215) 464-4000 · Fax (215) 464-4001

REV A
2/15/10