# MIO-5350

## Intel® Pentium N4200 Celeron N3350 & Atom™ E3950/E3940/E3930, 3.5" MI/O-Compact SBC, DDR3L, VGA, HDMI/DP*, 48-bit LVDS/eDP*, 2GbE, Mini PCIe, mSATA, iManager, M.2 E Key, *TPM 2.0, MIOe

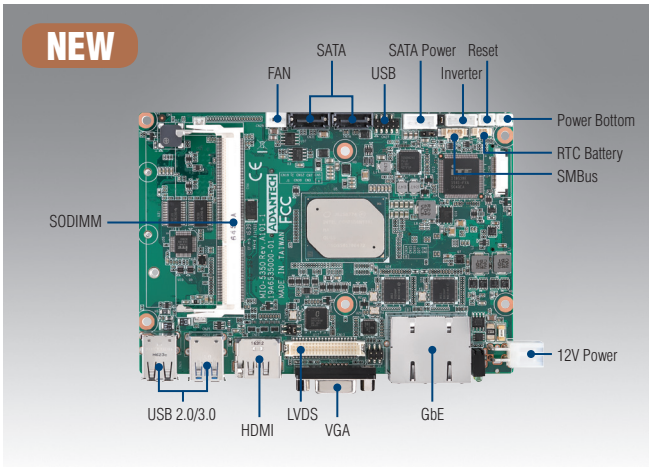


Windows Embedded | iManager | WISE-PaaS/RMM | CE FCC

## Features

- Intel® Pentium N4200 & Celeron N3350, Atom™E3950, E3940, E3930,DDR3L 1867 MHz, up to 8GB
- DirectX 12.0, OpenGL 4.3, OpenCL 2.0, Triple display: VGA+LVDS/eDP+ HDMI/DP*
- Flexible design using integrated multiple I/O: MIOe to approach vertical applications & keep domain knowhow
- 2 Intel i210 GbE, rich I/O: 4COM, 2 SATA, 2 USB 3.0, SMBus/I²C, GPIO full-size Mini PCIe, full-size mSATA
- Supports iManager, RMM and Embedded Software APIs

**Software APIs:** GPIO, H/W Monitor, Brightness, Watchdog, Backlight On/Off, SMBus/ I²C, CPU Speed, System Throttling

**Utilities:** Monitoring

## Specifications

| | | | | | | |
|---|---|---|---|---|---|---|
| Processor System | CPU | Intel Penium 4200 | Intel Celeron N3350 | Intel Atom E3950 | Intel Atom E3940 | Intel Atom E3930 |
| | Base Frequency | 1.1 (Quad-Core) | 1.1 (Dual-Core) | 1.6 (Quad-Core) | 1.6 (Quad-Core) | 1.3 (Dual-Core) |
| | Burst Frequency | 2.5 | 2.4 | 2 | 1.8 | 1.8 |
| | L2 Cache | 2 | 2 | 2 | 2 | 2 |
| | BIOS | AMI UEFI BIOS at 64 Mb | | | | |
| Memory | Technology | DDR3L 1867 MHZ | | | | |
| | Max. Capacity | 8 GB | | | | |
| | Socket | 1 x 204-pin SODIMM | | | | |
| Display | Controller | Intel Gen9 Graphic engine | | | | |
| | Graphic Features | DirectX 12.0, OpenGL 4.3, OpenCL 2.0<br>HW Decode: MPEG2, H.264 (L5.2), VC-1, WMV9, VP8, JPEG/MJPEG, H.265 (HEVC), VP9, MVC | | | | |
| | VGA | Maximum Resolution up to 1920 x 1200 | | | | |
| | LVDS | 48 bit LVDS up to 1.4b (3840 x 2160 @ 30Hz)<br>Supports 3.3/5/12V for VDD power, 5/12V for inverter | | | | |
| | eDP* | v1.4 4096 x 2160 @ 60Hz | | | | |
| | HDMI / DP* | HDMI 3840 x 2160 @ 30Hz/ DP1.2a (4096 x 2160 @ 60Hz) | | | | |
| | Mulit-Display | VGA, HDMI/DP*, LVDS/eDP* | | | | |
| Ethernet | Speed | 10/100/1000Mbps | | | | |
| | Controller | Intel i210 | | | | |
| | Connector | 2 RJ45 | | | | |
| Audio | Codec | Realtek ALC888S, High Definition Audio (HD), Line-in, Line out, Mic-in | | | | |
| | Amplifier* | Optional via MIOe | | | | |
| WatchDog Timer | | Output System reset, Programmable counter from 1 ~ 255 minutes/ seconds | | | | |
| Storage | SATA | 2 (2nd SATA is by request), up to 3Gb/s (300 MB/s) | | | | |
| | mSATA | 1 x Full-size | | | | |
| Rear I/O | Ethernet | 2 (10/100/1000Mbps) | | | | |
| | VGA | 1 | | | | |
| | HDMI / DisplayPort* | 1 | | | | |
| | USB 2.0 | 2 | | | | |
| | USB 3.0 | 2 | | | | |
| | LED | Power, HDD | | | | |
| | DC Jack* | 1 | | | | |
| Internal I/O | Serial | 2 x RS-232 from COM1/2, 2 x RS-232/422/485 from COM3/4 with auto flow control (ESD protection: air gap ±15kV, contact ±8kV) | | | | |
| | USB 2.0 | 2 | | | | |
| | I²C | 1 (Shared with SMBus pin) | | | | |
| | SMBus | 1 | | | | |
| | GPIO | 8-bit (5V tolerance) | | | | |
| Security | TPM2.0* | Support by request | | | | |
| Expansion | Mini PCIe | 1 x Full-size | | | | |
| | MIOe | SMBus, 3 x USB2.0, LPC, 1 x PCIe x1, line out, DisplayPort*, +5 Vsb/+12 Vsb power, Power On, Rest | | | | |
| Power | Power Type | Single 12V DC power input | | | | |
| | Power Supply Voltage | 12V ± 10% | | | | |
| | Power Consumption (Typical) | N4200: 0.4A @ 12V (4.80W)<br>N3350: 0.4A @ 12V (4.80W) | | | | |
| | Power Consumption (Max, test in HCT) | N4200: 1.26A @ 12V (15.12W)<br>N3350: 1.29 @ 12V (15.48W) | | | | |
| | Power Management | ACPI | | | | |
| | Battery | Lithium 3 V / 210 mAH | | | | |
| Environment | Operating | 0 ~ 60 °C (32 ~ 140 °F) (Operating humidity: 40 °C @ 95% RH Non-Condensing) | | | | |
| | Non-Operating | -40 °C ~ 85 °C and 60 °C @ 95% RH Non-Condensing | | | | |
| Physical Characteristics | Dimensions (L x W) | 146 x 102 mm (5.7" x 4"), same as 3.5" | | | | |
| | Weight | 0.5kg (1.1lb), weight of total package | | | | |
| | Height | Top Side: 19 mm; Bottom Side: 6.8 mm; PCB: 1.6 mm | | | | |

* This specification is supported by request



All product specifications are subject to change without notice.

Last updated: 24-Oct-2017

## Block Diagram

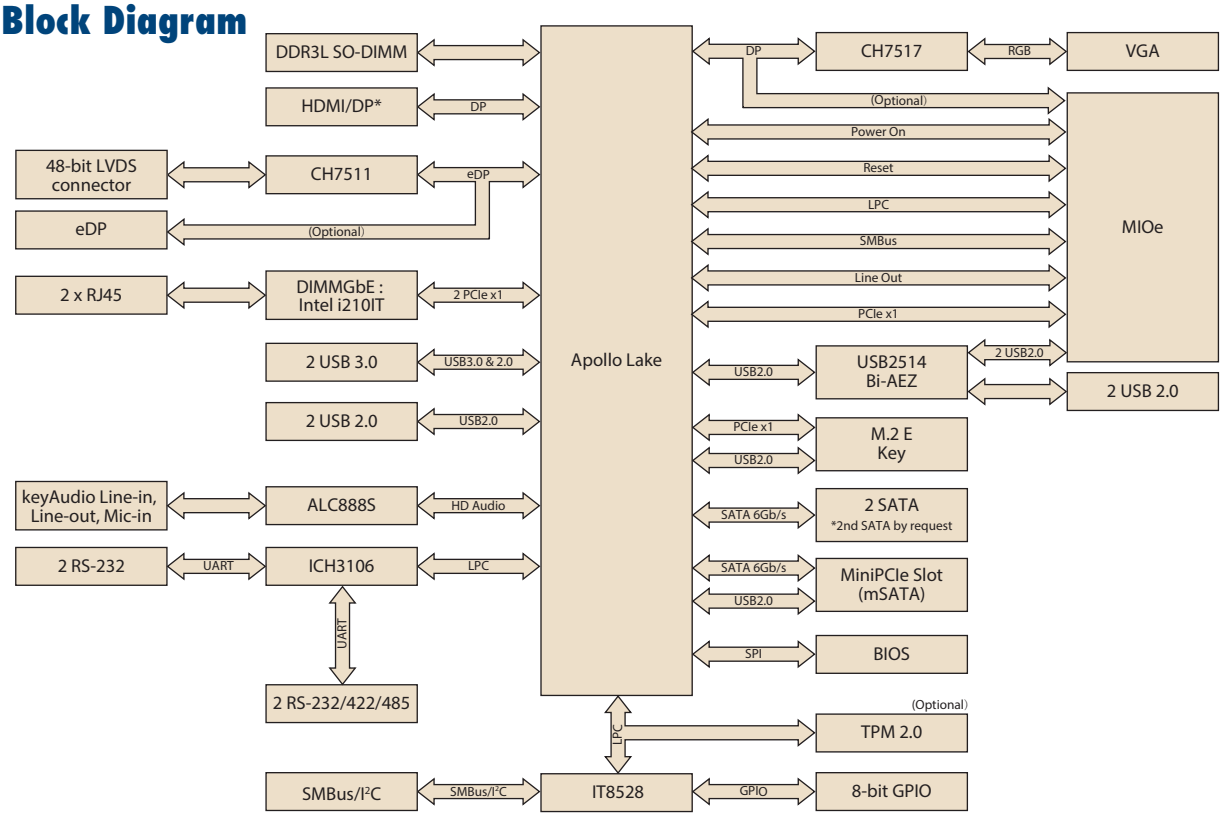


## Ordering Information

| Part No. | CPU | L2 Cache | Memory | LVDS/ eDP* | VGA | HDMI/ DP* | GbE | Audio | RS-232/ 422/485 | RS-232 | USB 3.0 | USB 2.0 | SATA III | M.2 E Key | Mini PCIe | mSATA | MIOe | Power connector | Thermal Solution* | Operating Temp. |
|---|---|---|---|---|---|---|---|---|---|---|---|---|---|---|---|---|---|---|---|---|
| MIO-5350N-S2A1E | Intel N4200 | 2MB | SODIMM | 48-bit | Yes | 1 | 2 | Yes | 2 | 2 | 2 | 4 | 1 | 1 | Full-size | Full-size | Yes | 2x2pin | Passive | 0°C~60°C |
| MIO-5350N-S1A1E | Intel N3350 | 2MB | SODIMM | 48-bit | Yes | 1 | 2 | Yes | 2 | 2 | 2 | 4 | 1 | 1 | Full-size | Full-size | Yes | 2x2pin | Passive | 0°C~60°C |

Note: passive=fanless

## Packing List

| Part No. | Description | Quantity |
|---|---|---|
| | MIO-5350 SBC | 1 |
| 2006535000 | Startup Manual | 1 |
| 1700006291 | M Cable SATA 7P/SATA 7P 30cm C=R 180/90 | 1 |
| 1700018785 | SATA 35cm power cable | 1 |
| 1701200220 | COM RS-232 Cable 2*10P-2.0/D-SUB 9P (M)*2 22CM | 2 |
| 1700019584 | Audio Cable 2*5P-2.0/JACK*3 20cm | 1 |
| 9689000002 | mini Jumper pack | 1 |

## Optional Accessories

| Part No. | Description |
|---|---|
| 1757003934 | Adapter 100-240V 60W 12V 5A W/O PFC |
| 1703100264 | Internal 1 port USB cable 22.5cm |

## Embedded OS/API

| Embedded OS/API | Part No. | Description |
|---|---|---|
| Win10 | 2070015276 | 64bit (ENG) |
| | | |
| WEC2013 | | |
| Linux | | Ubuntu 14.04 |
| VxWorks | | 6.9.3.3 |
| Android | | Kit Kat 4.4 |
| Software API | | iManager 2.0 |

## Rear I/O View

