Mini E-MLX

Hardware Description



Overview

This document describes the hardware of Mini E-Mlx in a short form. Detailed description is available in file “Mini E-Mlx hardware.doc”

Contents

1. Introduction 4
1.1. Differences with E-Mlx 4
1.2. Mini-Dins 6
1.2.1. Mini-Din 9 6
1.2.2. Mini-Din 8 6
2. PCB Architecture 7
2.1. USB interface 8
2.2. Analog MUST 8
2.3. Digital MUST 8
2.4. Digital IC Test Output 9
2.5. Programmable power supplies 9
2.6. Bi-directional I/Os and I²C interface 10
2.7. Standard LIN interface 11
2.8. Fast LIN interface 11
3. Annexes 12
3.1. References 12
3.2. PCB arrangement 13
4. Contact 14
5. Disclaimer 14
History records 15

Table of figures

Figure 1: Old E-Mlx MM connection to board 5
Figure 2: Mini-Din 9 pinning 6
Figure 3: Mini-Din 8 pinning 6
Figure 4: PCB architecture 7
Figure 5: Analog MUST driver 8
Figure 6: Digital MUST 8
Figure 7: Test output interface 9
Figure 8: Programmable power supplies 9
Figure 9: Free I/Os 10
Figure 10: Fast LIN interface 11

1. Introduction

The Mini E-Mlx is an evolution of the E-Mlx. It is intended to replace it in the near future. The reason of this evolution is mainly triggered by the fact that E-Mlx needs a parallel port that is disappearing in the new coming PC generations.

1.1. Differences with E-Mlx

***Removed functionalities**:*

- Not anymore able to mimic old Crash Barrier E5 emulator.
- 3 programmable power supplies instead of 4 (Use Vbat for the fourth one).
- Programmable power supplies limited to 100mA output current (No fan).

Changed functionality:

- PC connection through a USB 2.0 interface (USB 1.0 compatible)
- No need for power supply (for digital MUST)

Added functionalities:

- Enhanced MMF processor (Transparent to user but run faster with less code).
- Support of real time debugging introduced in MICE for MelexCM.
- Flash programming through LIN layer and LIN protocol
- Flash programming through LIN layer and Melexis Fast LIN protocol
- Flexible connection to a remote hardware (for conformance test for example).

IMPORTANT:

Due to the lightly different use of Mini-EMlx compared to E-Mlx MM, the pinning of Mini-Din 9 is slightly different:

	Mini E-Mlx		Old E-Mlx MM	
Pin	**Name**	**Description**	**Name**	**Description**
1	GND	Ground	GND	Ground
2	TI0	Digital MUST output (LSB)	EXTRA1	Free N open drain
3	VOUT0	Programmable supply 0	VOUT0	Programmable supply 0
4	LINMUST	LIN or analog MUST output	MUST	Analog MUST output
5	TI1	Digital MUST output (MSB)	EXTRA2	Free N open drain
6	**VBAT**	**Car battery (Input)**	**VOUT3**	**Programmable supply 3**
7	VOUT1	Programmable supply 1	VOUT1	Programmable supply 1
8	TO	Test Output of D.U.T	MICE	Test output
9	VOUT2	Programmable supply 2	VOUT2	Programmable supply 2

The main difference is that there are now only 3 programmable supplies instead of 4. E-Mlx MM VOUT3 is now removed and replaced by a VBAT. If Mini E-Mlx is used for pure digital exchanges (i.e. Test inputs are MUST digital), there is no need to connect this pin. If analog MUST, LIN, Fast LIN or any VOUT is used, a VBAT (12V) must be provided to Mini E-Mlx.

Other differences:

Although E-Mlx MM was designed to interface analog MUST pin, it was possible to use NMOS open drain outputs EXTRA1 and EXTRA2 to mimic analog MUST in a digital form. The typical schematic used on the evaluation board for such ICs was as shown on Figure 1.

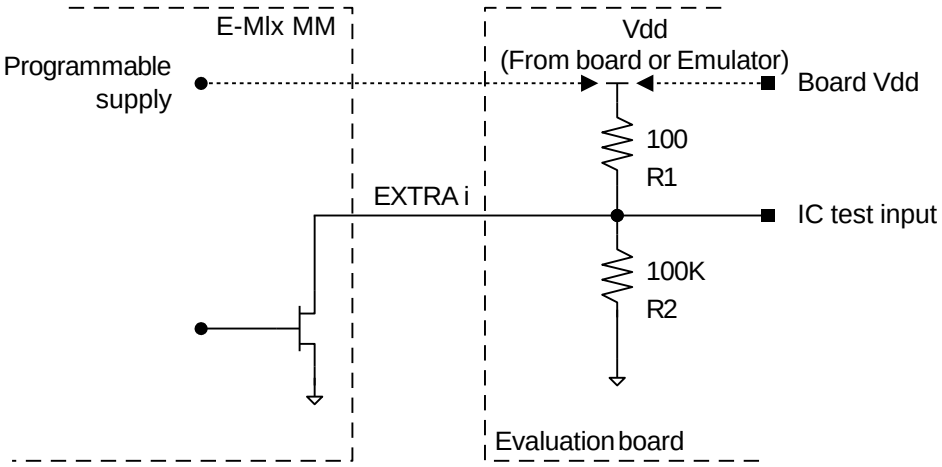

Figure 1: Old E-Mlx MM connection to board

R1 was a low ohmic resistance to allow fast 0 to 1 transitions, while R2 was a high ohmic pull-down to force IC test inputs to 00 (i.e. no test) while E-Mlx MM was not connected.

IMPORTANT:

With new Mini E-Mlx, pins EXTRA[2:1] are now replaced by CMOS outputs TI[1:0] (74HCT00 with programmable 3.3V or 5.0V), therefore, the resistance R1 should be removed while R2 should remain.

Note that keeping R1 is forcing 50mA at 5V supply when output is low and could damage the Mini E-Mlx. It is therefore mandatory to remove it (for both outputs). To insure compatibility with E-Mlx, users may add a jumper in the case Vdd is provided from the board, else do nothing as programmable supply used by E-Mlx is VOUT3 that does not exist in Mini E-Mlx.

1.2. Mini-Dins

The Mini E-Mlx has 2 mini-din connectors, one 8 pins and one 9 pins.

1.2.1. Mini-Din 9

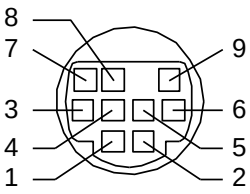

Mini-Din 9
female, front view

Pin	Name	Dir.	Description
1	GND	-	Ground
2	TI0	Out	Digital MUST output (LSB)
3	Vout0	Out	Programmable supply 0
4	LINMUST	Out	LIN or analog MUST output
5	TI1	Out	Digital MUST output (MSB)
6	Vbat	In or Out	Car battery **(*)**
7	Vout1	Out	Programmable supply 1
8	TO	In	Test Output of D.U.T
9	Vout2	Out	Programmable supply 2

Figure 2: Mini-Din 9 pinning

(*): Shared with mini-din 8

1.2.2. Mini-Din 8

This mini-Din is free for future uses like a communication with another tool.

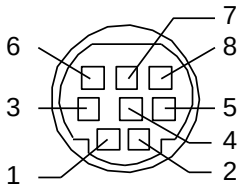

Mini-Din 8
female, front view

Pin	Name	Dir.	Description
1	GND	-	
2	SDA	Out	I^2C serial data output
3	IO0	Bi	Bi-directional CMOS I/O
4	Vbat	In or Out	Car battery **(**)**
5	SCL	Out	I^2C serial clock output
6	IO1	Bi	Bi-directional CMOS I/O
7	IO2	Bi	Bi-directional CMOS I/O
8	IO3	Bi	Bi-directional CMOS I/O

Figure 3: Mini-Din 8 pinning

(**): Shared with mini-din 9

2. PCB Architecture

The architecture of Mini E-Mlx is given on Figure 4.

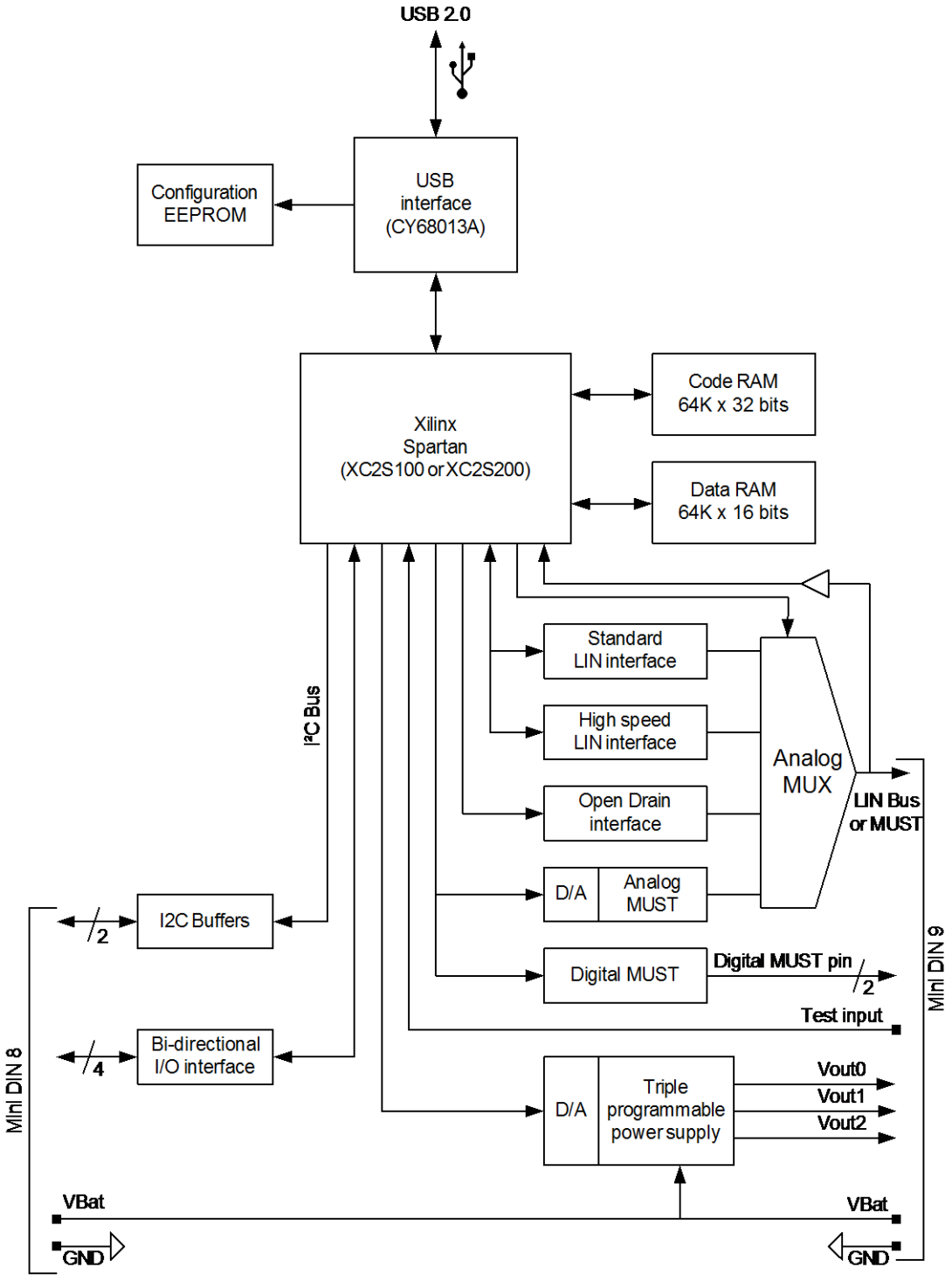

Figure 4: PCB architecture

2.1. USB interface

The USB interface is made by a Cypress CY68013A which is an Intel 8051 with an extra USB hardware. The program of the 8051 is stored in an on-chip RAM. The PC software takes care of uploading it at startup. This arrangement allows easy firmware updates.

2.2. Analog MUST

The analog must levels are generated using an analog multiplexer (DG408) as shown on Figure 5.

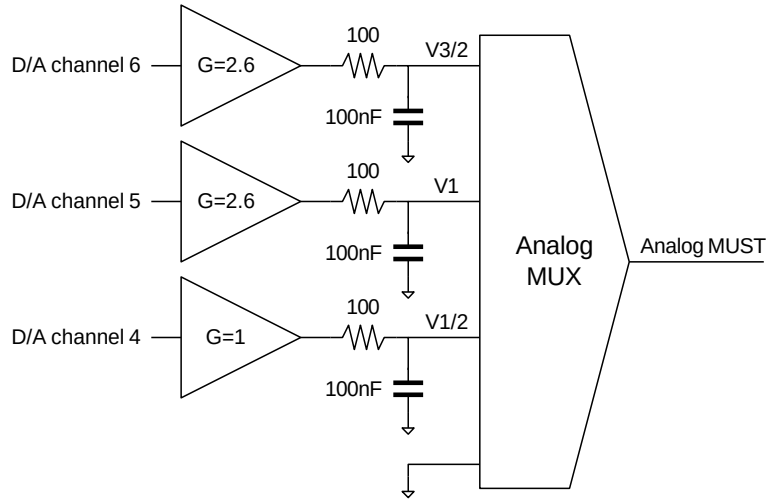

Figure 5: Analog MUST driver

Warning: Usage of analog MUST needs Vbat to be provided to Mini E-Mlx.

Name	Min	Max	Step
V3/2	0.5V	8.5V	33.5mV
V1	0.5V	8.5V	33.5mV
V1/2	0.5V	3.3V	13mV

2.3. Digital MUST

Digital MUST is directly driven by the MMF processor (e.g; the Xilinx) through standard 74HCT buffers. Those buffers have a selectable supply of 5V or 3.3V using port bit PWR5V (see chapter **Error! Reference source not found.**).

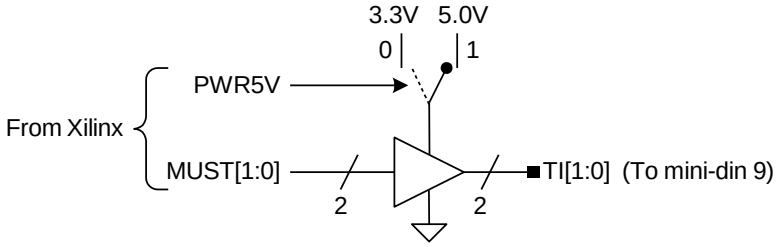

Figure 6: Digital MUST

2.4. Digital IC Test Output

The IC Test output (TO) is read through a standard 74HCT buffer that has a selectable supply of 5V or 3.3V using port bit PWR5V (see chapter **Error! Reference source not found.**)

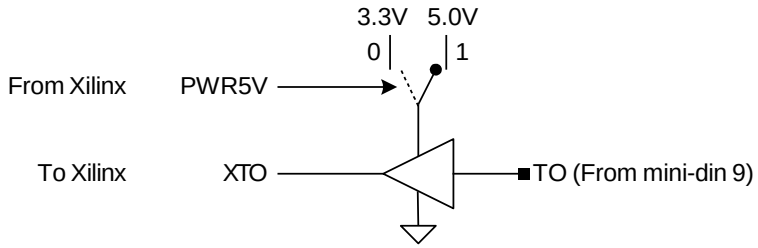

Figure 7: Test output interface

2.5. Programmable power supplies

The 3 programmable power supplies can **only** operate when a Vbat is provided (USB is not able to source enough current for them). The Vbat is first stepped up to 22V by a DC-DC converter (LM2587S) that is then distributed to the 3 linear regulators (OPA547) controlled by 3 outputs of the D/A converted described in chapter **Error! Reference source not found.**. A block iagram is given in Figure 8.

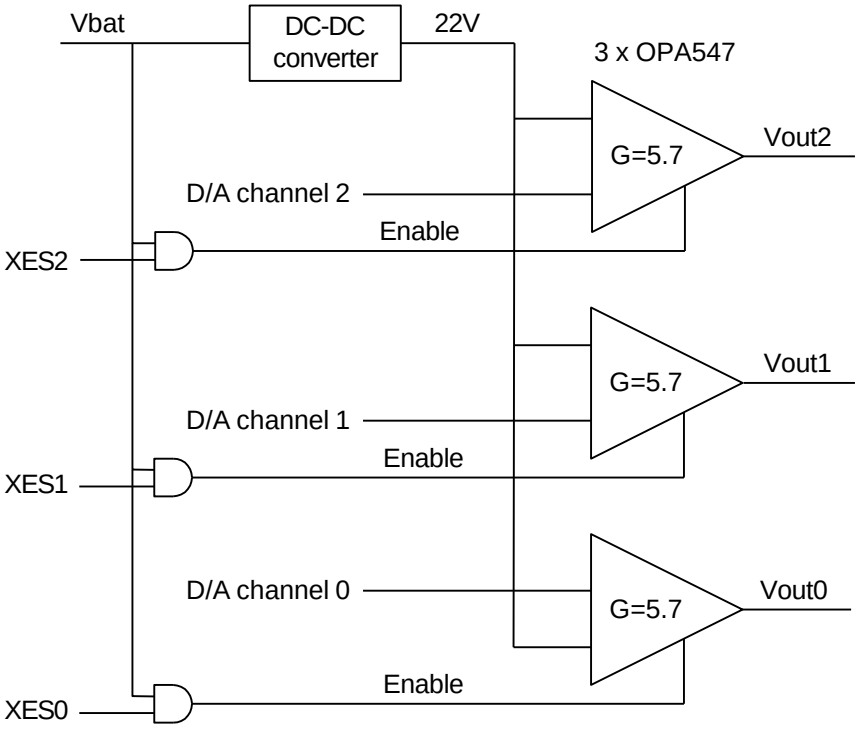

Figure 8: Programmable power supplies

Notes:

a) Each output as an internal current limitation to 100mA and a thermal shutdown.
b) Each output can range from 0.8V to 18.8V by steps of 78mV (all values are typical).
c) When ENABLE is de-asserted, corresponding Vout is in high impedance mode.
d) XESi are port bits described in chapter **Error! Reference source not found.**

2.6. Bi-directional I/Os and I²C interface

4 bi-directional I/Os are available on mini-din 8 for connections to a future external hardware.
The 4 outputs are driven by a 5V supplied tri-state quad buffer (74HCT125).
The 4 inputs are read through inverters (74HC04).

Note: The Cypress I²C bus is also available on mini-din 8 (without any protecting buffer).

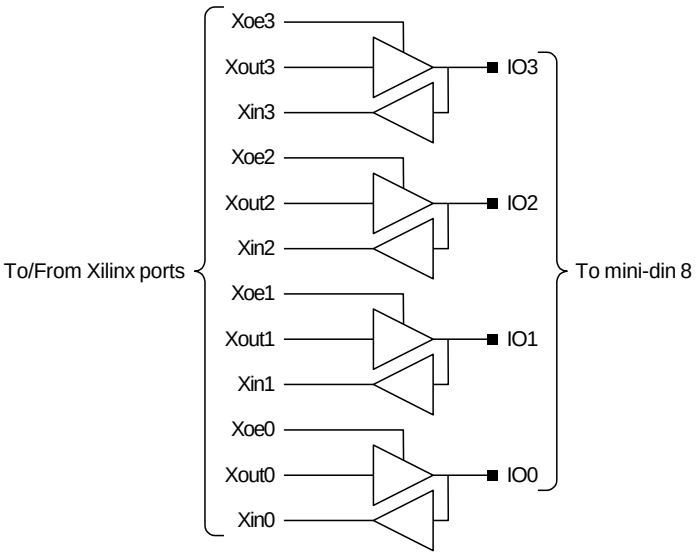

Figure 9: Free I/Os

Notes:

- Mini-din 8 is described in chapter 1.2.2.

2.7. Standard LIN interface

This is done using via a TH8080.

2.8. Fast LIN interface

Programming with a high speed on the LIN bus cannot be done using TH8080 due to slope limitations of the LIN standard that limit its baud rate. The Schematic used is given in Figure 10

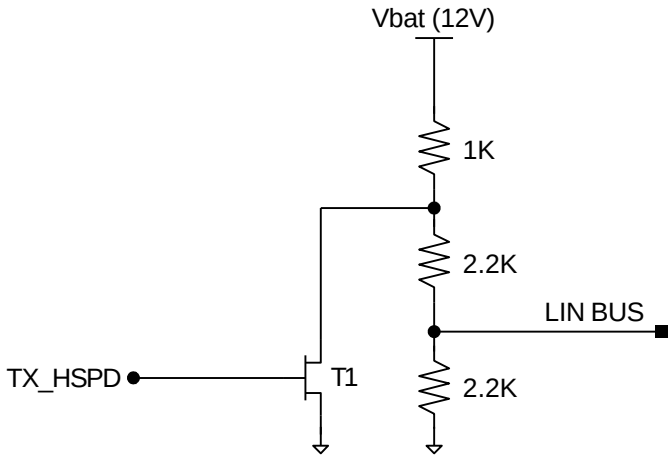

Figure 10: Fast LIN interface

When T1 is off, the voltage on the bus is reduced from *Vbat* to $Vlin = \frac{2.2}{2.2+2.2+1} * 12 = 4.89V$

The output impedance is *Zout* = 2.2K // (2.2K + 1K) = 1.3K

When T1 is on, *Vlin* = 0, and *Zout* = 2.2K // 2.2K = 1.1K

This schematic is compatible with Cooling and LIN, i.e. with a serial inductance up to 100µH and with the target bus frequency of 100 KHz.

3. Annexes

3.1. References

[1] Mmf format reference, available at http://goliath.mucontrol.elex.be/docs/References/MmfFormat

3.2. PCB arrangement

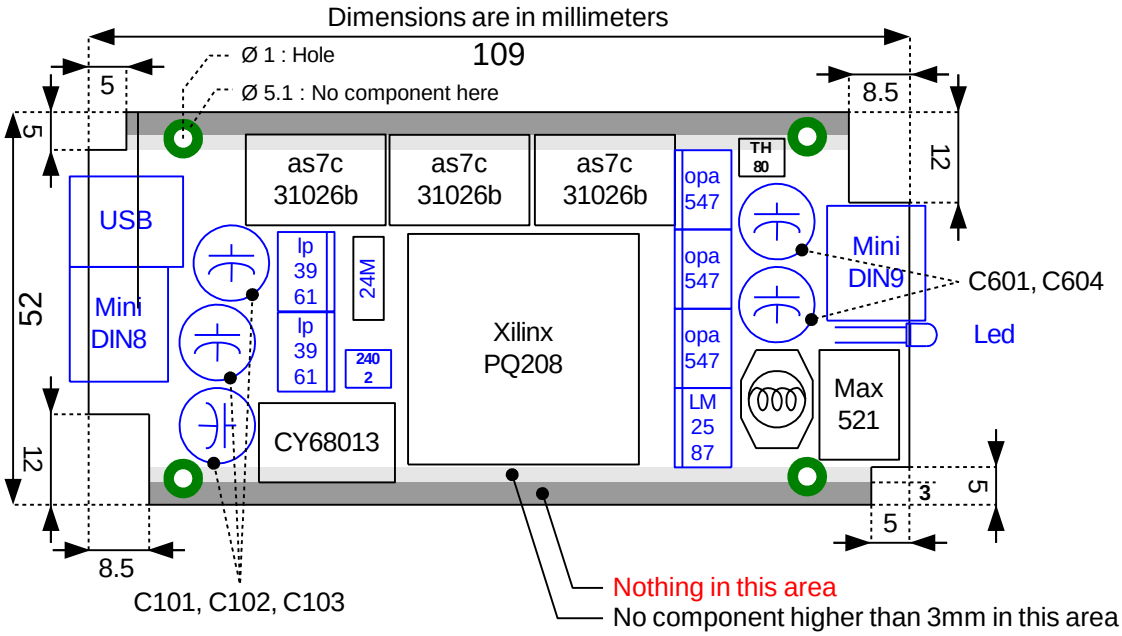

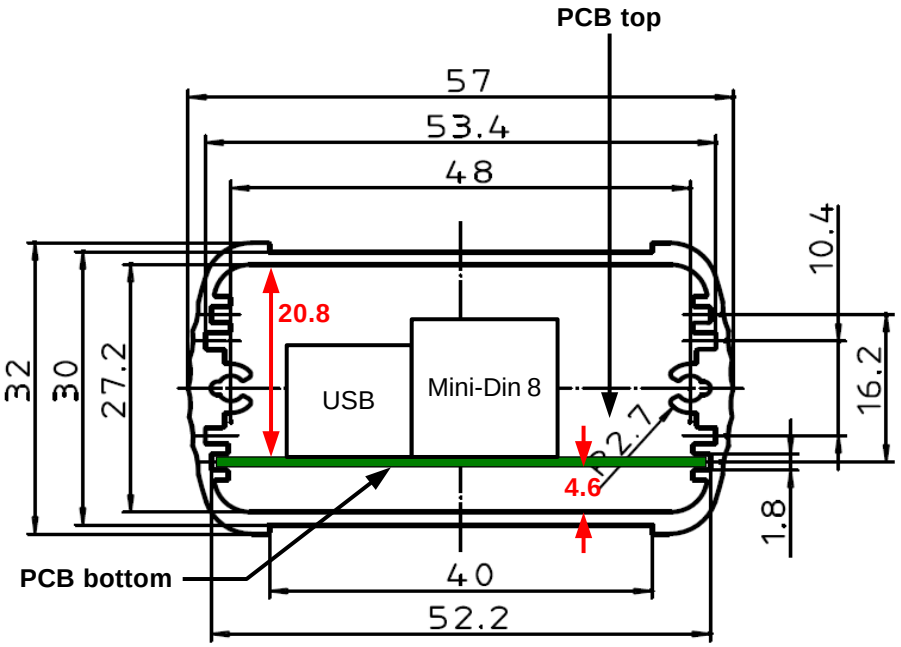

4. Contact

For the latest version of this document, go to our website at www.melexis.com.

For additional information, please contact our Direct Sales team and get help for your specific needs:

Europe, Africa	Telephone: +32 13 67 04 95
	Email : sales_europe@melexis.com
Americas	Telephone: +1 603 223 2362
	Email : sales_usa@melexis.com
Asia	Email : sales_asia@melexis.com

5. Disclaimer

The information furnished by Melexis herein ("Information") is believed to be correct and accurate. Melexis disclaims (i) any and all liability in connection with or arising out of the furnishing, performance or use of the technical data or use of the product(s) as described herein ("Product") (ii) any and all liability, including without limitation, special, consequential or incidental damages, and (iii) any and all warranties, express, statutory, implied, or by description, including warranties of fitness for particular purpose, non-infringement and merchantability. No obligation or liability shall arise or flow out of Melexis' rendering of technical or other services.
The Information is provided "as is" and Melexis reserves the right to change the Information at any time and without notice. Therefore, before placing orders and/or prior to designing the Product into a system, users or any third party should obtain the latest version of the relevant information to verify that the information being relied upon is current.
Users or any third party must further determine the suitability of the Product for its application, including the level of reliability required and determine whether it is fit for a particular purpose.
The Information is proprietary and/or confidential information of Melexis and the use thereof or anything described by the Information does not grant, explicitly or implicitly, to any party any patent rights, licenses, or any other intellectual property rights.
This document as well as the Product(s) may be subject to export control regulations. Please be aware that export might require a prior authorization from competent authorities.
The Product(s) are intended for use in normal commercial applications. Unless otherwise agreed upon in writing, the Product(s) are not designed, authorized or warranted to be suitable in applications requiring extended temperature range and/or unusual environmental requirements. High reliability applications, such as medical life-support or life-sustaining equipment are specifically not recommended by Melexis.
The Product(s) may not be used for the following applications subject to export control regulations: the development, production, processing, operation, maintenance, storage, recognition or proliferation of 1) chemical, biological or nuclear weapons, or for the development, production, maintenance or storage of missiles for such weapons: 2) civil firearms, including spare parts or ammunition for such arms; 3) defense related products, or other material for military use or for law enforcement; 4) any applications that, alone or in combination with other goods, substances or organisms could cause serious harm to persons or goods and that can be used as a means of violence in an armed conflict or any similar violent situation.
The Products sold by Melexis are subject to the terms and conditions as specified in the Terms of Sale, which can be found at https://www.melexis.com/en/legal/terms-and-conditions.

This document supersedes and replaces all prior information regarding the Product(s) and/or previous versions of this document.

Melexis NV © - No part of this document may be reproduced without the prior written consent of Melexis. (2016)

ISO/TS 16949 and ISO14001 Certified

History records

Revision	Date	Name	Comment
1.0	02 May, 2007	Ph. Laugier	Created from "*Mini E-Mlx hardware.doc*"