Power Supply, Primary Switch Mode, Narrow Design
MINI-PS-100-240AC/10-15DC/2

MINI POWER provides:

- **Extra narrow** widths of 22.5, 45, and 67.5 mm (0.886, 1.772, and 2.657 in.)
- **Global use** due to a wide range input
- **A high level of operational safety** in complex global networks
- **Reliable startup** of heavy loads due to POWER BOOST

The reliability of a power supply determines the availability of individual components in a system and whether complex systems can function safely.

The globalization of markets increases the demands placed on the power supply. A wide range input and a high level of availability are required. These requirements are met by MINI POWER.



1. Short Description

MINI POWER is the extra narrow power supply, which is available in widths of 22.5, 45, and 67.5 mm (0.886, 1.772, and 2.657 in.).

In addition to a 24 V version with output currents of 1 A, 2 A, and 4 A, special voltages are also available with 5 V/3 A, +/-15 V/1 A, and 10 - 15 V/2 A.

Reliable startup of heavy loads is ensured by a power reserve of up to 100% - the POWER BOOST.

The high level of operational safety is also ensured in complex global networks. MINI POWER also operates in applications where static voltage dips, transient power supply failures or phase failure are common.

Large capacitors ensure mains buffering of more than 20 ms at full load.

2. Area of Application

MINI POWER can be used globally due to the consistent provision of a wide range input.

In this way, your entire system can be tested at any production location in the world and can be delivered to any location in the world without faulty switching of the input voltage. This reduces storage costs and logistical effort.

An international approval package including UL 60950 for IT equipment and UL 508 for industrial control equipment enables the device to be used globally.

Headquarters: © Phoenix Contact GmbH & Co. KG • Flachsmarktstraße 8 • 32825 Blomberg • Germany
Phone +49 - 52 35 - 30 0 • Fax +49 - 52 35 - 34 12 00 • www.phoenixcontact.com
Local Contact: www.phoenixcontact.com/salesnetwork

3. Technical Data

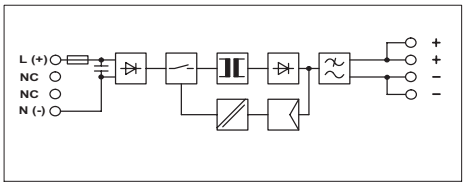

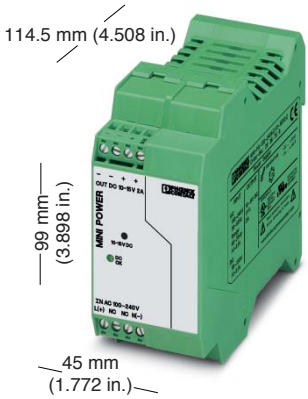

MINI-PS-100-240AC/10-15DC/2

1 AC

7	solid [mm²]	flexible [mm²]	AWG	torque [Nm]	[lb in.]
Input	0.2 - 2.5	0.2 - 2.5	25 - 14	0.5 - 0.6	4.4 - 5.3
Output	0.2 - 2.5	0.2 - 2.5	24 - 14	0.5 - 0.6	4.4 - 5.3

Description	Type	Order No.	Pcs. Pkt.
Power Supply, Primary switch mode, narrow design	**MINI-PS-100-240AC/10-15DC/2**	**29 38 75 6**	1

Technical Data

Input Data ①	
Nominal input voltage	100 - 240 V AC (wide range input)
Input voltage range	85 - 264 V AC 90 - 350 V DC
Frequency	45 - 65 Hz 0 Hz
Current consumption (for nominal values)	0.4 A (120 V AC)/0.2 A (230 V AC), approximately
Inrush current limiting/I^2t (+25°C [+77°F])	< 20 A/< 1.7 A^2s, typical
Mains buffering for a nominal load (typical)	> 20 ms
Switch-on time after applying the mains voltage	< 1 s
Transient surge voltage protection	Input filter
Input fuse, internal	2 AT (device protection)
Recommended fuse	Circuit breaker 10 A or 16 A Characteristic B (EN 60 898)
Output Data ②	
Nominal output voltage U_N/tolerance	12 V DC/±1% (default)
Setting range for the output voltage	10 - 15 V DC
Output current during convection cooling and nominal values POWER BOOST I_{BOOST} (t = 2 min., typical)	2.3 A (U_{out} = 10 - 15 V DC)
Nominal output current I_N -25°C to +60°C (-13°F to +140°F)	2 A (U_{out} = 10 - 15 V DC)
-25°C to +40°C (-13°F to +104°F)	2.3 A (U_{out} = 10 - 15 V DC)
Derating	From +60°C (+140°F), 5% per Kelvin
Short-circuit current limit	< 3.4 A
Startup of capacitive loads	Unlimited
System deviation on: Load change static 10 - 90%	< 1%, typical
Load change dynamic 10 - 90%	< 3%, typical
Input voltage change ±10%	< 0.1%, typical
Maximum power loss No load/nominal load	1 W/7 W
Level of efficiency (typical)	86% (for 230 V AC and nominal values)
Response time U_{OUT} (10% - 90%)	< 100 ms, typical
Residual ripple/switching peaks (20 MHz)	< 100 mV_{pp} (for nominal values)
Can be connected in parallel	To increase redundancy and power
Internal surge voltage protection	Yes, limited to 20 V DC, approximately
Signal Output Data	
LED (U_{out} > 0.9 x U_N ≙ LED permanently on)	Green LED

General Data		
Insulation voltage:	Input/output	3 kV AC/(type test)/4 kV AC (routine test)
Approval package		
Safety transformers for switched-mode power supply units		EN 61 558-2-17
Electrical safety (of IT equipment)		EN 60950/VDE 0805
		UL/C-UL Recognized UL 60 950 [1]
Industrial control equipment		UL/C-UL Listed UL 508 [1]
Equipping high voltage installations with electronic equipment		EN 50 178/VDE 0160 (Surge Voltage Category III)
Safety extra-low voltage		PELV (EN 50 178) SELV (EN 60 950) VDE 0100-410
Safe isolation Protection against dangerous shock currents, basic requirements for safe isolation in electrical equipment		DIN VDE 0106-101
Limitation of harmonic line currents		According to EN 61000-3-2
Mounting position		On horizontal NS 35 DIN rail according to EN 50022
Can be mounted with spacing	- Vertical	≥ 5 cm (1.969 in.)
	- Horizontal	0 cm
Degree of protection		IP 20
Class of protection		II, (in closed control cabinets)
MTBF		> 500 000 h according to IEC 1709 (SN 29 500)
Housing version		Polyamide PA, color green
Dimensions (W x H x D)		(45 x 99 x 114.5 mm [1.722 x 3.898 x 4.508 in.])
Weight		0.25 kg, approximately

Climatic Data		
Ambient temperature	Operation	-25°C to +70°C (-13°F to +158°F) (> +60°C [+140°F] derating)
	Storage	-40°C to +85°C (-40°F to +185°F)
Humidity		Up to 95% at +25°C (+77°F), no condensation
Vibration	according to IEC 68-2-6	< 15 Hz, amplitude ±2.5 mm/15 Hz - 150 Hz, 2.3 g
Shock	according to IEC 68-2-27	30 g all space directions
Degree of pollution		2 (according to EN 50 178)
Climatic category		3K3 (according to EN 60 721)

[1] UL approval for ambient tempertatunre up to +60 °C (+140 °C)

CE

Conforms to the EMC Directive 89/336/EEC and the Low Voltage Directive 73/23/EEC

EMC (Electromagnetic Compatibility) **Noise Immunity According to EN 61000-6-2:**			**Requirements** **EN 61 000-6-2**		**MINI-PS-100-240AC/10-15DC/2**
Electrostatic discharge (ESD)	EN 61000-4-2[3]	Housing Contact discharge: Air discharge:			> Level 3 4 kV 8 kV
Electromagnetic HF field	EN 61000-4-3[2]	Housing Frequency: Field strength:			Level 3 80 - 1000 MHz 10 V/m
Fast transients (burst)	EN 61000-4-4[3]	Input: Output:	2 kV 2 kV	asymmetrical[5] asymmetrical[5]	4 kV (Level 4) 2 kV (Level 3)
Surge current loads	EN 61000-4-5[3]	Input: Output:	2 kV 1 kV 0.5 kV 0.5 kV	asymmetrical[5] symmetrical[4] asymmetrical[5] symmetrical[4]	2 kV (Level 3) 1 kV (Level 3) 0.5 kV (Level 1) 0.5 kV (Level 1)
Conducted interference	EN 61000-4-6[2]	I/O: Frequency: U_0:		asymmetrical[5]	Level 3 0.15 - 80 MHz 10 V
Voltage dips	EN 61000-4-11[3]	Input:	30% reduction of the input voltage for 0.5 periods		See input data: Mains buffering > 20 ms
Simulation of radiophone	EN 50204	Frequency: Field strength:	Not required		900 MHz/1800 MHz 20 V/m
Noise Emission According to EN 50081-2:					
Radio interference	EN 55011		Class A[6]		EN 55011 (EN 55022) Class B[7]
Radio interference	EN 55011		Class A[6]		EN 55011 (EN 55022) Class B[7]

EN 55011 corresponds to CISPR11/EN 55022 corresponds to CISPR22
EN 61000 corresponds to IEC 1000

[2] Criterion A: Normal operating characteristics within the specified limits.
[3] Criterion B: Temporary adverse effects on the operating characteristics that the device corrects independently.

[4] symmetrical: Cable to cable
[5] asymmetrical: Cable to ground

[6] Class A: Industrial application
[7] Class B: Industrial and domestic applications

4. Device View, Connections, and Control Elements

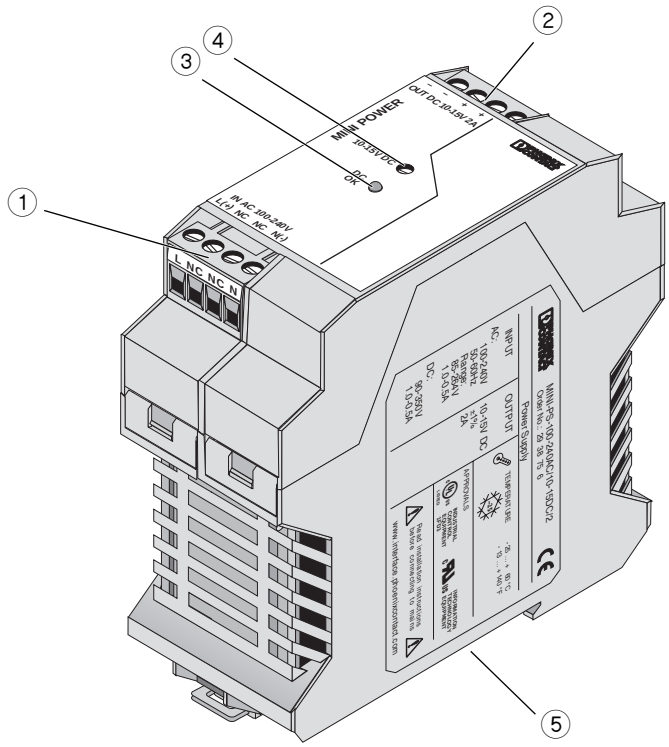

Figure 04

① **AC input:**
Input voltage 85 - 264 V AC
Frequency 45 - 65 Hz
(0.2 mm^2 to 2.5 mm^2 solid)
(0.2 mm^2 to 2.5 mm^2 flexible)
(25 - 14 AWG)
Internal fuse 2 AT
Recommended fuse
10 A or 16 A c.b./Characteristic B

② **DC output:**
Output voltage 12 V DC (default),
can be set from 10 - 15 V DC using potentiometer ④
(0.2 mm^2 to 2.5 mm^2 solid)
(0.2 mm^2 to 2.5 mm^2 flexible) (25 - 14 AWG)
The device is idling-proof and short-circuit-proof.

③ **DC OK LED**

④ **Potentiometer 10 - 15 V DC**

⑤ **Universal latching foot for EN DIN rails**

5. Safety and Warning Instructions

To ensure that the device can be operated safely and all functions can be used, please read these instructions carefully.

Caution: Never carry out work when the power is turned on, this is highly dangerous.

Installation and startup must only be carried out by qualified personnel. The relevant country-specific regulations (e.g., VDE, DIN) must also be observed.

Before startup it is particularly important to ensure that:

- The mains have been connected correctly and protection is provided against electric shock.
- The device can be switched off outside the power supply according to EN 60950 regulations (e.g., by the line protection on the primary side).
- All supply lines have sufficient fuse protection and are the correct size.
- All output cables are the correct size for the maximum device output current or have separate fuse protection.
- Sufficient convection is ensured.

MINI POWER is a built-in device. After installation the terminal area must be covered to provide sufficient protection against unauthorized access to live parts. This is ensured by installing the device in the control cabinet or distributor box.

The device contains dangerous live components and high levels of stored energy.

6. Installation

6.1. Mounting

The power supply can be snapped onto all DIN rails according to EN 50022-35. The device must be mounted horizontally (input terminal blocks facing downwards).

Installation Dimensions

To ensure sufficient convection, we recommend a minimum spacing of 5 cm (1.969 in.) to other modules above and below the device.

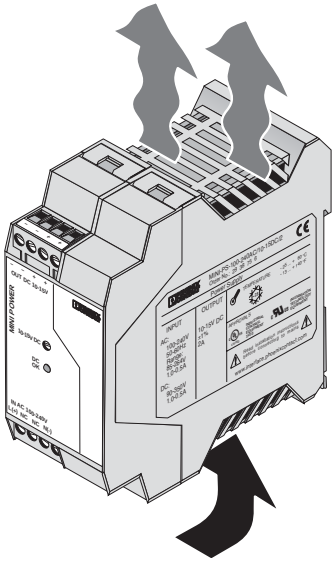

Figure 05

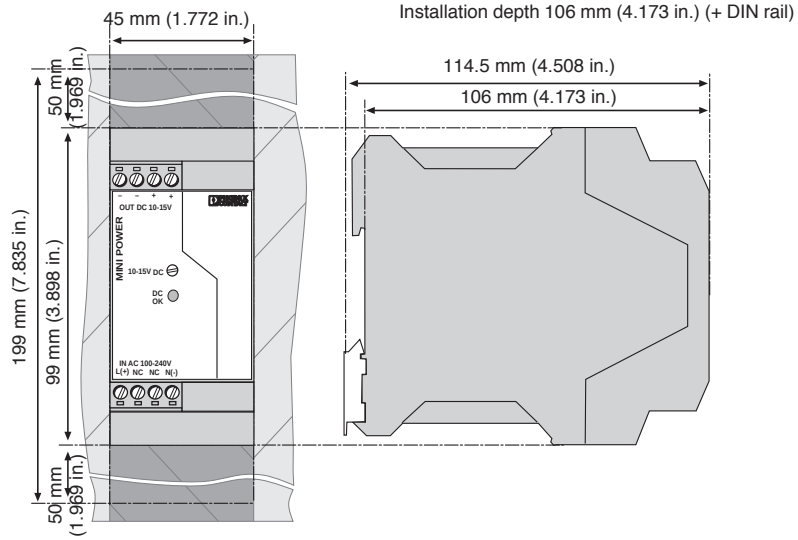

Figure 06

Mounting:

Place the module with the DIN rail guideway on the **top edge** of the DIN rail and then snap it **downwards**.

Removal:

Release the snap-on catch using a screwdriver and then detach the module from the **bottom edge** of the DIN rail.

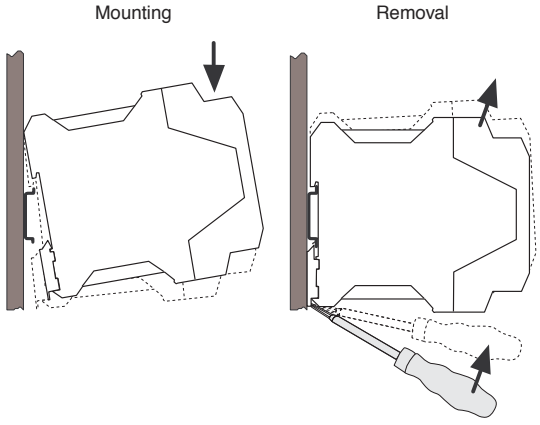

Figure 07

6.2. Connection of Various Types of Network: 100 - 240 V AC Networks

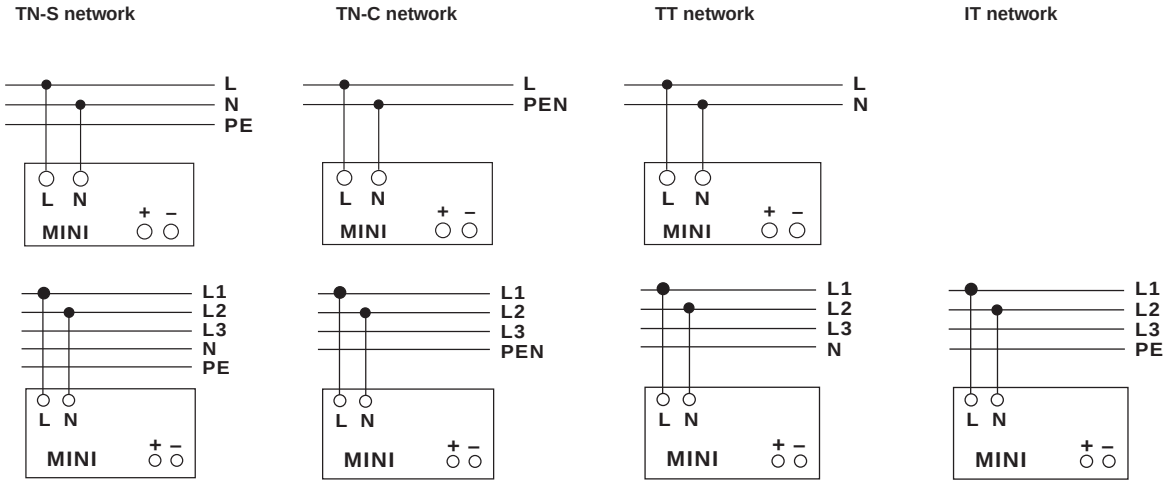

Figure 08

Connection Cable:

The device is equipped with COMBICON connectors. This reliable user-friendly connection method enables quick device connection and safe isolation of the electrical connection, if required. **Only operate connectors when the power is switched off.**

The following cable cross sections can be connected:

		Solid [mm²]	Flexible [mm²]	AWG	Torque [Nm]	[lb in.]
①	Input:	0.2 - 2.5	0.2 - 2.5	25 - 14	0.5 - 0.6	4.4 - 5.3
②	Output:	0.2 - 2.5	0.2 - 2.5	25 - 14	0.5 - 0.6	4.4 - 5.3

For reliable and safe-to-touch connection: Strip 7 mm (0.28 in.) from the connector ends.

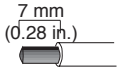

6.3. Input (①, Figure 9)

The 100 - 240 V AC connection is made using screw connections L and N. The device can be connected to single-phase AC networks or to two external conductors for three-phase networks (TN, TT or IT network according to VDE 0100 T300/IEC364-3) with nominal voltages of 100 - 240 V AC.

Protecting the Primary Side

The device must be installed according to the specifications of EN 60 950. It must be possible to switch off the device using a suitable disconnecting device outside the power supply.

Note that an all-pole disconnecting device must be provided for two-phase operation using two external conductors for a three-phase network.

For example, primary side line protection could be used.

Additional device protection is not required, as an internal fuse is present.

Recommended Fuse:

Circuit breaker 6 A or 10 A, Characteristic B (or equivalent).

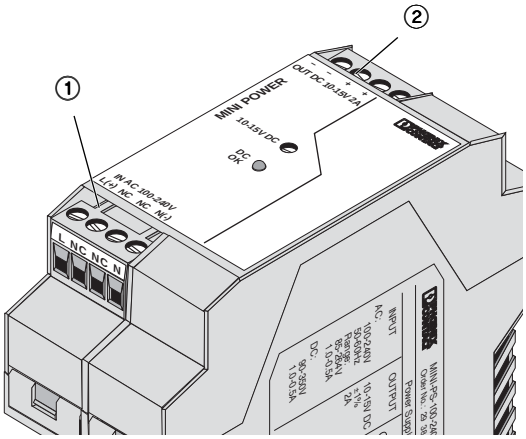

Figure 09

A suitable fuse must be fitted for DC applications.

If the internal fuse is blown, this is most probably due to a device fault.
In this case, the device should be checked in the factory.

6.4. Output (②, Figure 9)

The 10 - 15 V DC connection is made using the "+" and "–" screw connections on the screw connection ②.

Protecting the Secondary Side:

The device is electronic short-circuit-proof and idling-proof. In the event of an error, the output voltage is limited to a maximum of 20 V DC.

It should be ensured that all output cables are the correct size for the maximum output current or have separate fuse protection.

The secondary side cables should have large cross sections to keep voltage drops on the cables to a minimum.

DC OK LED

The green DC OK LED enables local function evaluation in the control cabinet.

LED ON		Normal operation of the power supply
LED OFF	**a)**	The output voltage is ≤ 0.9 x U_N. There is a secondary load short circuit or overload outside the POWER BOOST area.
	b)	No mains voltage is present or there is a device fault.

7. Function

7.1. Output Characteristic Curve (Figure 10).

The device can supply a nominal output current of 2 A up to an ambient temperature of 60°C (140°F). With an ambient temperature of up to 40°C (104°F) the device continuously supplies an output current of 2.3 A. At temperatures up to 60°C (140°F), the POWER BOOST provides a short-term output current of 2.3 A for a few minutes.

With high loads, the working point demonstrates the U/I characteristic curve shown in Figure 10.

On an overload or short circuit, the entire output current I_{BOOST} is provided permanently at a reduced output voltage.

Once the overload or short circuit has been removed, the entire set secondary voltage is available again.

The U/I characteristic curve ensures that both heavy capacitive loads and devices with DC/DC converters can be supplied by MINI POWER in the input circuit without any problems.

Connected fuses are reliably tripped. The selectivity in your system configuration is ensured at all times.

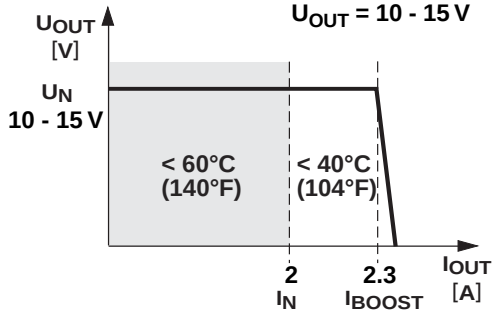

Figure 10

7.2. Temperature Response

The device can supply a nominal output current of 4 A up to an ambient temperature of 60°C (140°F). With an ambient temperature of up to 40°C (104°F) the device continuously supplies an output current of 5 A. At temperatures up to 60°C (140°F), the POWER BOOST provides a short-term output current of 6 A for a few minutes.

The output power must be decreased by 5% per Kelvin temperature increase for ambient temperatures above +60°C (+140°F). At ambient temperatures above +70°C (+158°F) or in the event of a thermal overload, the device reduces the output power to protect itself and returns to normal operation once it has cooled down.

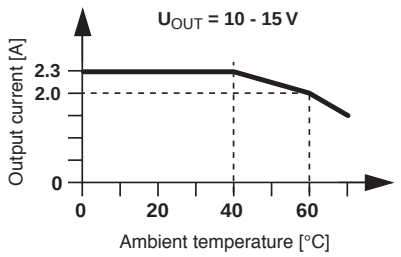

Figure 11

7.3. Parallel Operation

Devices of the same type can be connected in parallel to increase both redundancy and power. The default setting does not have to be adjusted.

To ensure symmetrical current distribution we recommend that all cable connections from the power supply to the DIN rail are the same length and have the same cross section.

Depending on the system, for parallel connection of more than two power supplies a protective circuit should be installed at each individual device output (e.g., decoupling diode or DC fuse). This means that in the event of a secondary device fault high return currents are avoided.

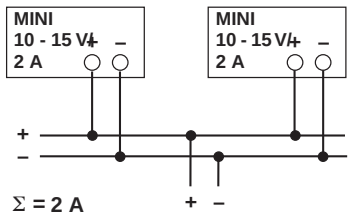

Figure 12

7.4. Redundancy Operation

Redundant connections are designed for supplying systems, which place particularly high requirements on operational safety. If a fault occurs in the primary circuit of device 1, device 2 automatically takes over the complete power supply without interruption and vice versa.

For this purpose, the power supplies to be connected in parallel must be large enough that the total current requirements of all loads can be fully met by one power supply. External decoupling diodes are required for 100% redundancy.

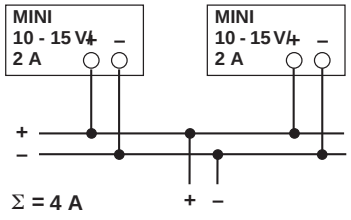

Figure 12

7.5. Power Increase

The output current can be increased to **n x I_N** where **n** is the number of devices connected in parallel.

The parallel connection for power increase can be used to extend existing systems. A parallel connection is recommended if the power supply does not cover the current consumption of the most powerful load. Otherwise, the loads should be divided over independent individual devices.

A maximum of five devices can be connected in parallel.

© PHOENIX CONTACT 09/01/04 TNR: 5156027-00 http://www.phoenixcontact.com