GaAlAs T-1 PACKAGE
INFRARED EMITTING DIODE MIE-304H4

Description

The MIE-304H4 is a GaAlAs infrared LED having a peak wavelength at 850nm molded in water clear plastic package. The forward voltage at low current and at high pulse current roughly correspond to the low values of the standard technology.

Features

- Ultra-high radiant intensity
- High response speed
- Standard T-1 (ϕ 3mm) package, radiant angle : 25°
- Peak wavelength λ_p = 850 nm

Package Dimensions

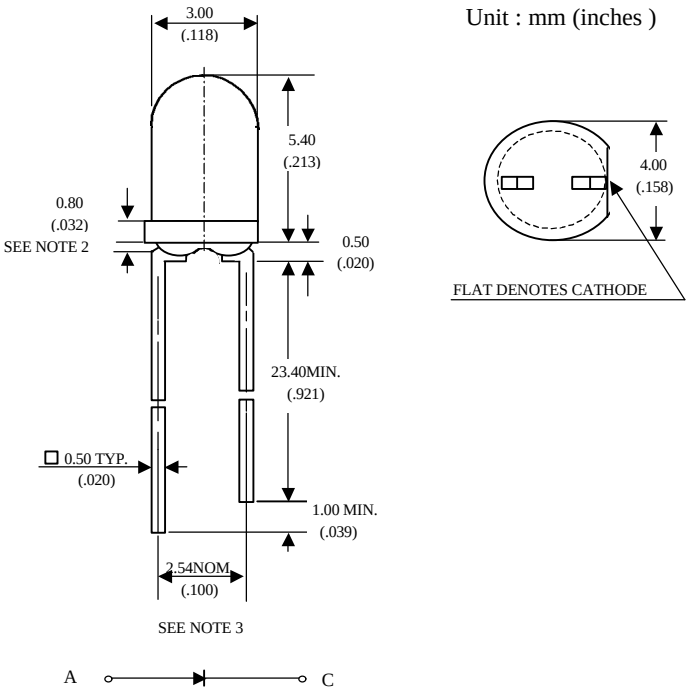

Notes :
1. Tolerance is ± 0.25 mm (.010") unless otherwise noted.
2. Protruded resin under flange is 0.5 mm (.019") max.
3. Lead spacing is measured where the leads emerge from the package.

Absolute Maximum Ratings

@ T_A=25°C

Parameter	Maximum Rating	Unit
Power Dissipation	120	mW
Peak Forward Current	1	A
Continuous Forward Current	100	mA
Reverse Voltage	5	V
Operating Temperature Range	-55°C to +100°C	
Storage Temperature Range	-55°C to +100°C	
Lead Soldering Temperature	260°C for 5 seconds	

Optical-Electrical Characteristics

@ T_A=25°C

Parameter	Test Conditions	Symbol	Min.	Typ .	Max.	Unit
Radiant Intensity	I_F=20mA	Ie	-	3.5	-	mW/sr
Forward Voltage	I_F=50mA	V_F	-	1.5	1.8	V
Reverse Current	V_R=5V	I_R	-	-	100	μA
Peak Wavelength	I_F=20mA	λp	-	850	-	nm
Spectral Bandwidth	I_F=20mA	Δλ	-	30	-	nm
View Angle	I_F=20mA	$2\theta_{1/2}$	-	25	-	deg .

Typical Optical-Electrical Characteristic Curves

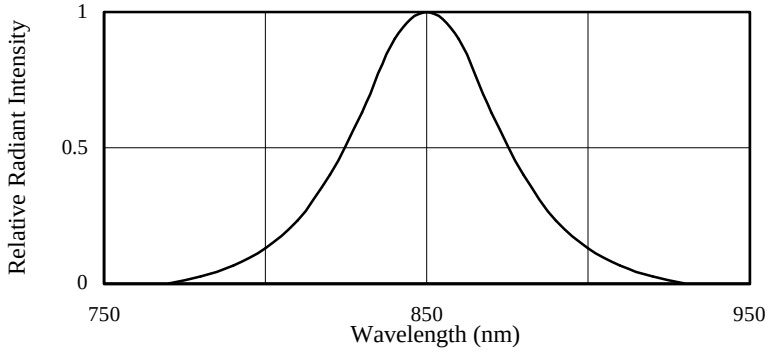

FIG.1 SPECTRAL DISTRIBUTION

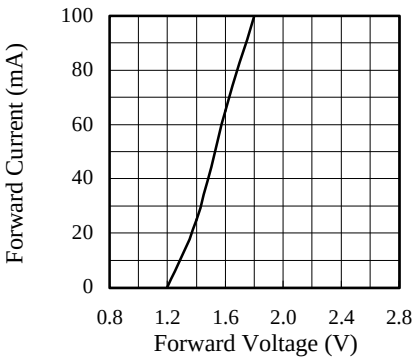

FIG.2 FORWARD CURRENT VS. FORWARD VOLTAGE

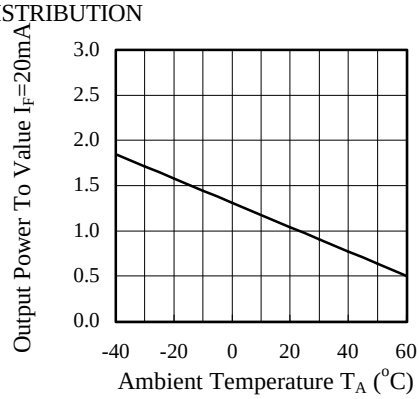

FIG.3 RELATIVE RADIANT INTENSITY VS. AMBIENT TEMPERATURE

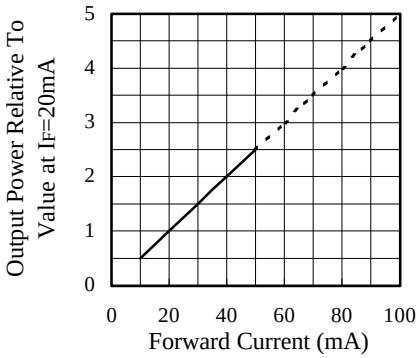

FIG.4 RELATIVE RADIANT INTENSITY VS. FORWARD CURRENT

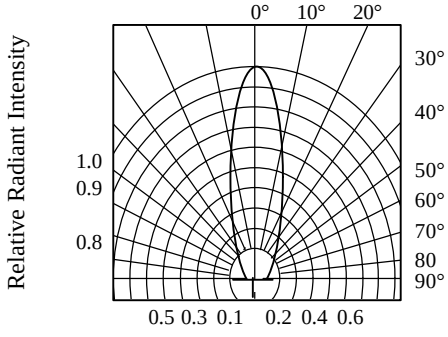

FIG.5 RADIATION DIAGRAM