MIC94300 Evaluation Board

200mA Switch with Ripple Blocker™ Technology

General Description

The MIC94300 is an integrated load switch that incorporates Micrel's Ripple Blocker™ active filter technology. The MIC94300 provides high-frequency ripple attenuation for applications where switching noise cannot be tolerated by sensitive downstream circuits such as in RF applications. The MIC94300 replaces a high-side switch, large filtering inductor, and capacitors to save board area.

The MIC94300 operates from an input voltage of 1.8V to 3.6V, allowing true load switching of low-voltage power rails in any electronic device. The output voltage (V_{OUT}) is set at a fixed drop from the input voltage.

Datasheets and support documentation can be found on Micrel's web site at www.micrel.com.

Requirements

The MIC94300 evaluation board requires an input power supply that is capable of delivering a minimum of 300mA at a voltage range of 1.8V to 3.6V. The output load can be either active or passive.

Precautions

The MIC94300 evaluation board does not have reverse polarity protection. Applying a negative voltage to the V_{IN} terminal may damage the device.

Getting Started

- **Connect an External Supply to V_{IN}**. Apply the desired input voltage to the V_{IN} and ground terminal of the evaluation board, paying careful attention to polarity and supply voltage ($1.8V \le V_{IN} \le 3.6V$).
- **Enable/Disable the MIC94300**. The evaluation board is supplied with 100kΩ pull-up resistor to V_{IN} for default on state. To disable the output, simply jumper the EN terminal to ground.
- **Connect the Load**. Connect the load to the V_{OUT} terminal and the ground terminal. The load can be either a passive (resistor) or active (electronic load). Be sure to monitor the output voltage at the V_{OUT} terminal.

Ordering Information

Part Number	Description
MIC94300YCS EV	200mA Ripple Blocker™ CSP Package Evaluation Board
MIC94300YMT EV	200mA Ripple Blocker™ Thin MLF® Package Evaluation Board

Ripple Blocker is a trademark of Micrel, Inc
MLF and MicroLeadFrame are registered trademarks of Amkor Technology, Inc.

Power Supply Ripple Rejection (PSRR) Measurements

Figure 1 illustrates the frequency response of the MIC94300.

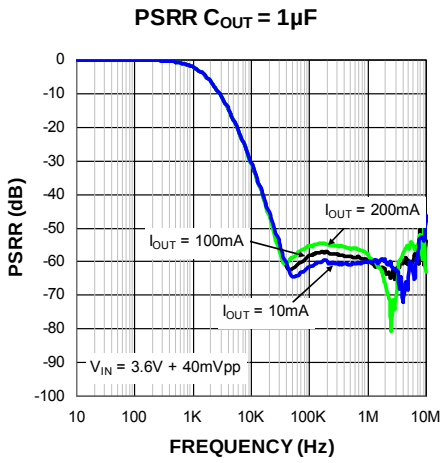

Figure 1. MIC94300 Ripple Blocker™ Frequency Response

For high-frequency measurements (above 1MHz), careful attention must be made to the test set-up configuration as it is easy to introduce noise into the grounds which will give inaccurate measurements as shown in Figure 2.

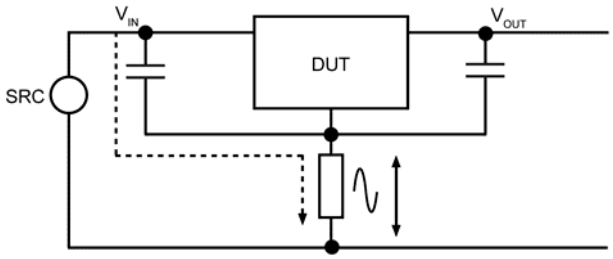

Figure 2. High-Frequency Noise on Measurement System

The inductance of test probes connected to the evaluation board at higher frequencies becomes a factor which can create a differential between the device under test and test measurement system grounds. Adding a low-value resistor (2Ω) in series with the input capacitor to ground and utilizing a test measurement system capable of making differential measurements will help to reduce these affects.

PSRR measurements may be made using either dedicated PSRR test equipment or with a PSRR interface board and a network analyzer. The network analyzer can sweep the AC frequency and perform a comparison measurement of the amplitude on the input and output. With this method, the network analyzer is configured for an A/R measurement. The difficulty arises when trying to impose the network analyzer's AC signal with the DC input voltage to the MIC94300. The circuit shown in Figure 3 accomplishes this by using the MIC911 as a summing amplifier. The summing amplifier adds the V_{SUPPLY} (DC voltage) and the network analyzers AC signal. As the network analyzers source is 50Ω impedance it may be neglected, the DC voltage seen at the non-inverting side is half of the V_{SUPPLY} voltage. The output is gained up by 2 with the 1kΩ resistor divider to the non-inverting side. This sums the AC and DC voltages with an overall gain of 1.

$$V_{OUT} = \left(\frac{1k\Omega}{1k\Omega + 1k\Omega} V_{SUPPLY} + \frac{1k\Omega}{1k\Omega + 1k\Omega} V_{NETWORKANALYZER} \right) \left(1 + \frac{1k\Omega}{1k\Omega} \right)$$

$$V_{OUT} = \left(\frac{1}{2} V_{SUPPLY} + \frac{1}{2} V_{NETWORKANALYZER} \right) \left(2 \right)$$

$$V_{OUT} = V_{SUPPLY} + V_{NETWORKANALYZER}$$

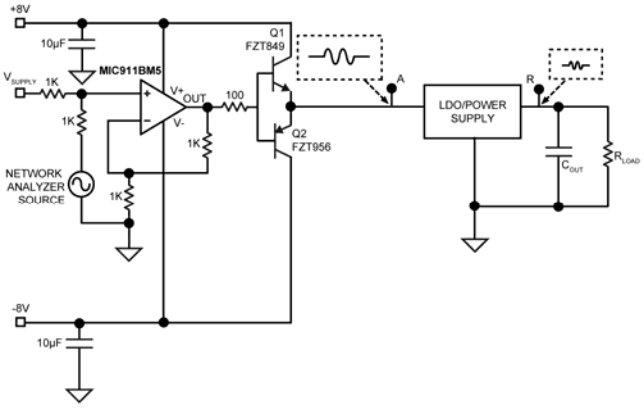

Figure 3. Network Analyzer Set-Up

hbwhelp@micrel.com or (408) 955-1690

Evaluation Board Schematics

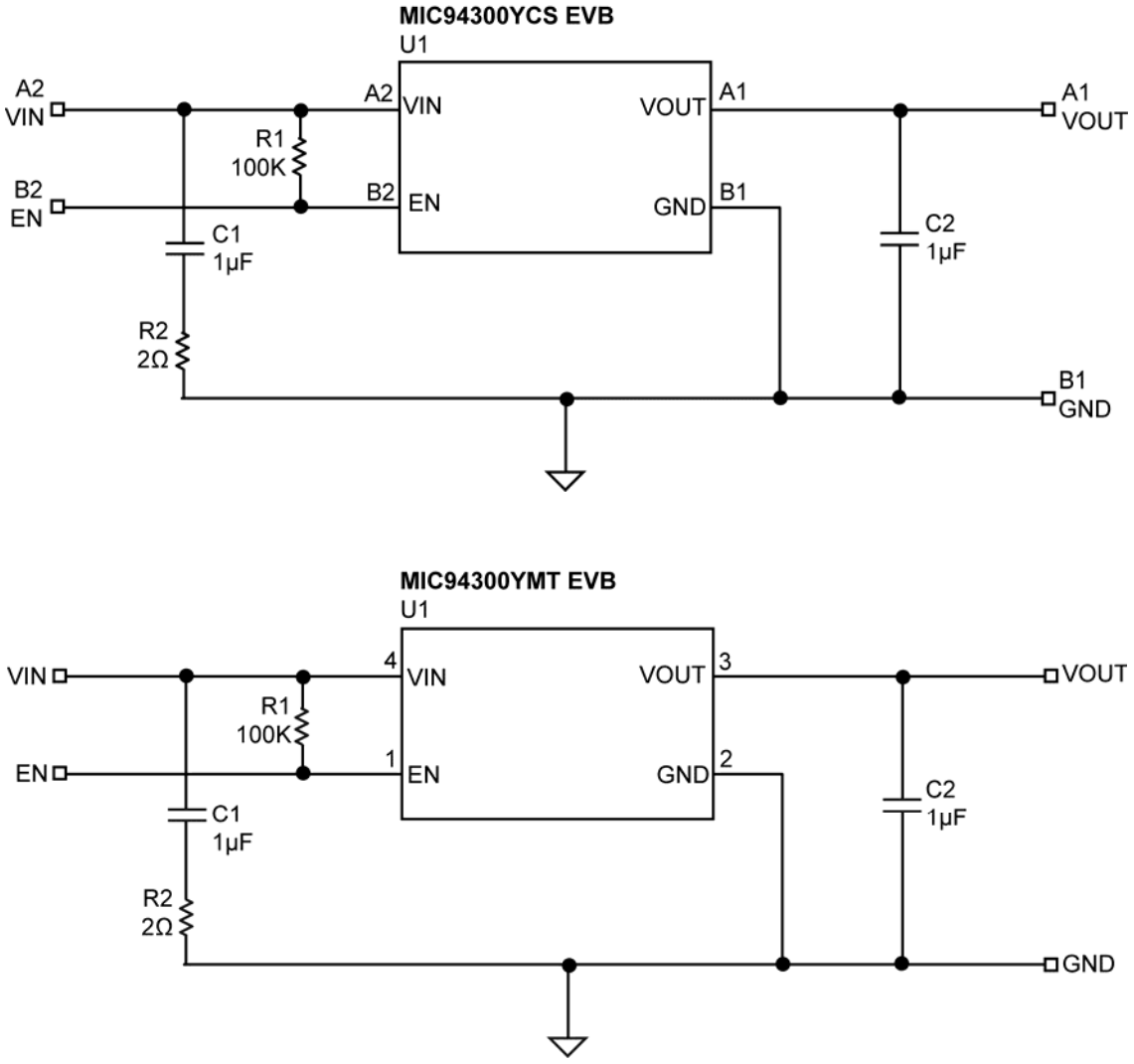

Bill of Materials

Item	Part Number	Manufacturer	Description	Qty.
C1, C2	CL10B105KA8NNNC	Samsung[1]	1µF, 25V, X7R, Size 0603, ceramic capacitor	2
R1	CRCW0402100KFKEA	Vishay[2]	100KΩ, 1%, 1/16W, Size 0402 resistor	1
R2	CRCW04022R00FKED	Vishay[2]	2Ω, 1%, 1/16W, Size 0402 resistor	1
U1	**MIC94300YCS**	**Micrel, Inc.[3]**	**200mA Switch with Ripple Blocker™ Technology**	**1**
	MIC94300YMT			

Notes:

1. Samsung: **http://www.semlcr.com**.
2. Vishay: **www.vishay.com**.
3. **Micrel, Inc**:: **www.micrel.com**.

PCB Layout Recommendations (CS Package)

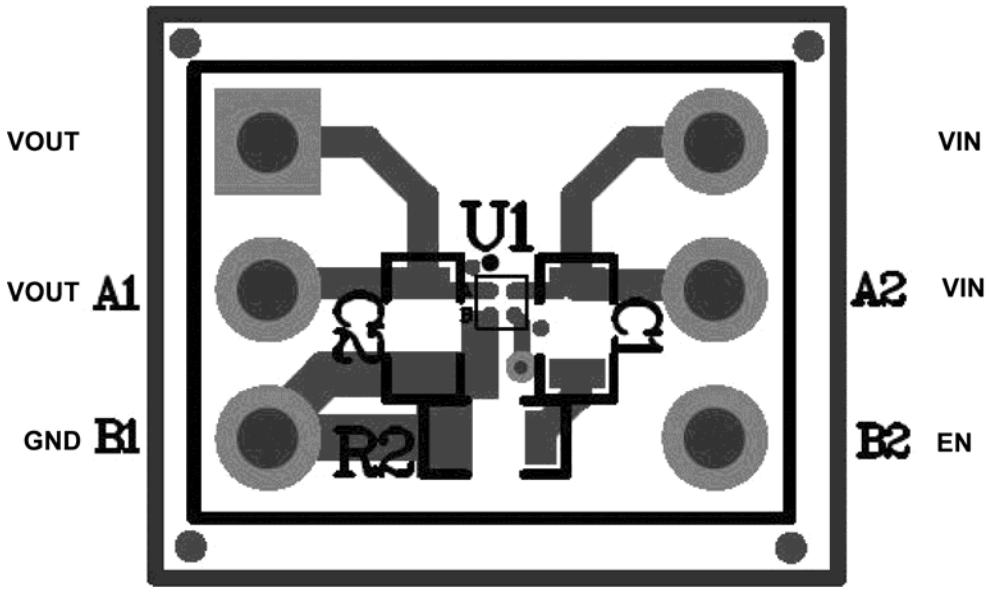

Top Layer

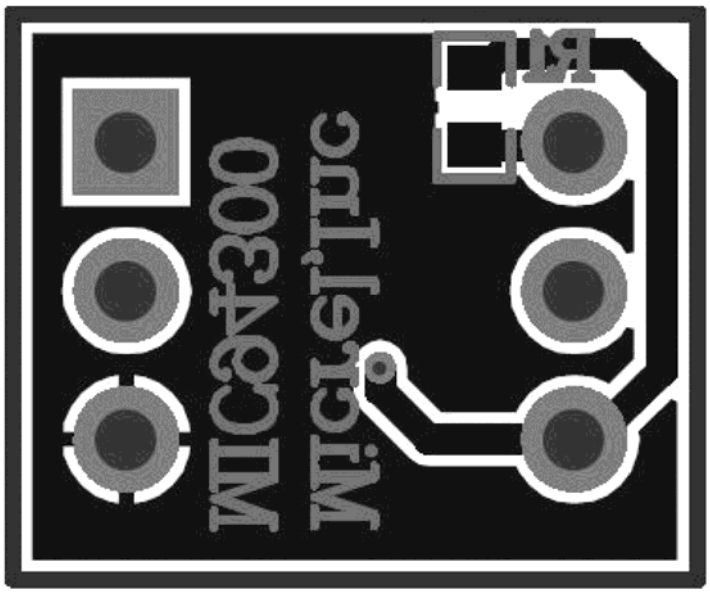

Bottom Layer

PCB Layout Recommendations (MT Package)

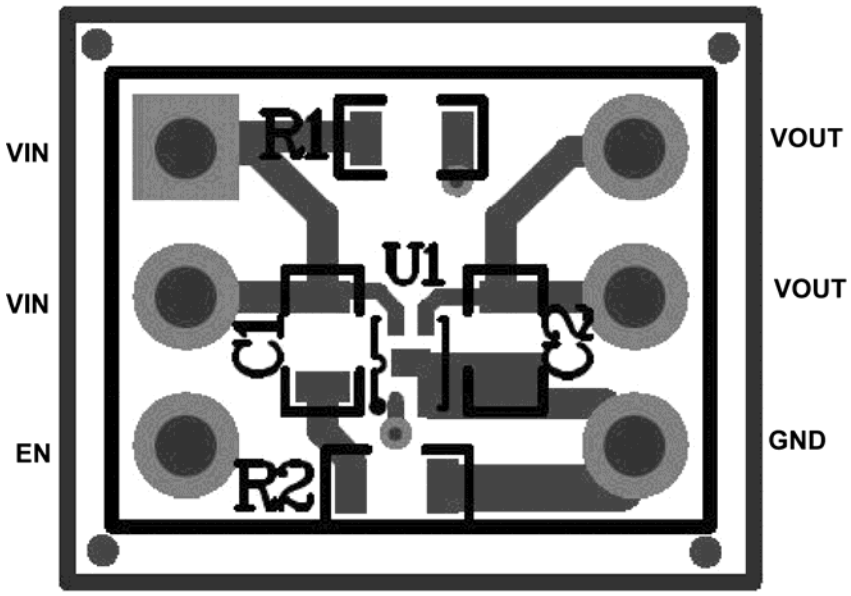

Top Layer

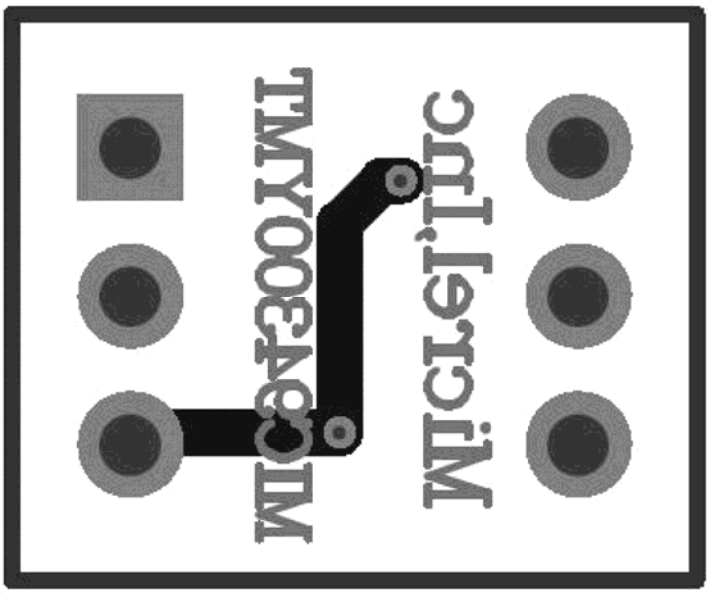

Bottom Layer

MICREL, INC. 2180 FORTUNE DRIVE SAN JOSE, CA 95131 USA
TEL +1 (408) 944-0800 FAX +1 (408) 474-1000 WEB www.micrel.com

Micrel makes no representations or warranties with respect to the accuracy or completeness of the information furnished in this data sheet. This information is not intended as a warranty and Micrel does not assume responsibility for its use. Micrel reserves the right to change circuitry, specifications and descriptions at any time without notice. No license, whether express, implied, arising by estoppel or otherwise, to any intellectual property rights is granted by this document. Except as provided in Micrel's terms and conditions of sale for such products, Micrel assumes no liability whatsoever, and Micrel disclaims any express or implied warranty relating to the sale and/or use of Micrel products including liability or warranties relating to fitness for a particular purpose, merchantability, or infringement of any patent, copyright or other intellectual property right.

Micrel Products are not designed or authorized for use as components in life support appliances, devices or systems where malfunction of a product can reasonably be expected to result in personal injury. Life support devices or systems are devices or systems that (a) are intended for surgical implant into the body or (b) support or sustain life, and whose failure to perform can be reasonably expected to result in a significant injury to the user. A Purchaser's use or sale of Micrel Products for use in life support appliances, devices or systems is a Purchaser's own risk and Purchaser agrees to fully indemnify Micrel for any damages resulting from such use or sale.

© 2012 Micrel, Incorporated.