MIC5365/6

High Performance Single 150mA LDO

General Description

The MIC5365/6 is an advanced general purpose linear regulator offering high power supply rejection (PSRR) in an ultra-small 1mm x 1mm package. The MIC5366 includes an auto-discharge feature that is activated when the enable pin is low. The MIC5365/6 is capable of sourcing 150mA output current and offers high PSRR making it an ideal solution for any portable electronic application.

Ideal for battery powered applications, the MIC5365/6 offers 2% initial accuracy, low dropout voltage (155mV @ 150mA), and low ground current (typically 29µA). The MIC5365/6 can also be put into a zero-off-mode current state, drawing virtually no current when disabled.

The MIC5365/6 is available in several advanced packages including a lead-free (RoHS compliant) 1mm x 1mm Thin MLF® occupying only 1mm^2 of PCB area, a 75% reduction in board area compared to SC-70 and 2mm x 2mm MLF® packages. It is also availabe in an SC-70-5 package.

The MIC5365/6 has an operating junction temperature range of –40°C to 125°C.

Data sheets and support documentation can be found on Micrel's web site at www.micrel.com.

Features

- Tiny 1mm x 1mm Thin MLF® and SC-70-5 packages
- Input voltage range: 2.5V to 5.5V
- 150mA guaranteed output current
- Stable with 1µF ceramic output capacitors
- Low dropout voltage – 155mV @ 150mA
- Excellent Load/Line Transient Response
- Low quiescent current – 29µA
- High PSRR – 70dB
- Output discharge circuit – MIC5366
- High output accuracy
  - ±2% initial accuracy
- Thermal shutdown and current limit protection

Applications

- Mobile phones
- Digital cameras
- GPS, PDAs, PMP, handhelds
- Portable electronics

Typical Application

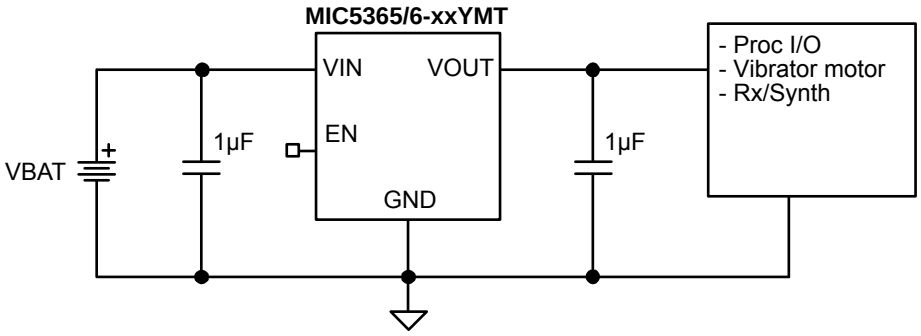

MLF and *Micro*LeadFrame are registered trademarks of Amkor Technology, Inc.

Block Diagram

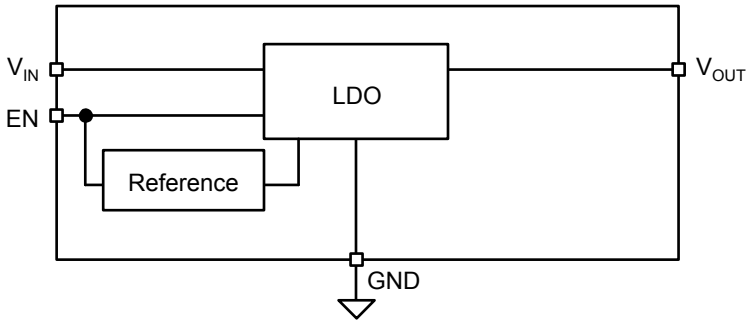

MIC5365 Block Diagram

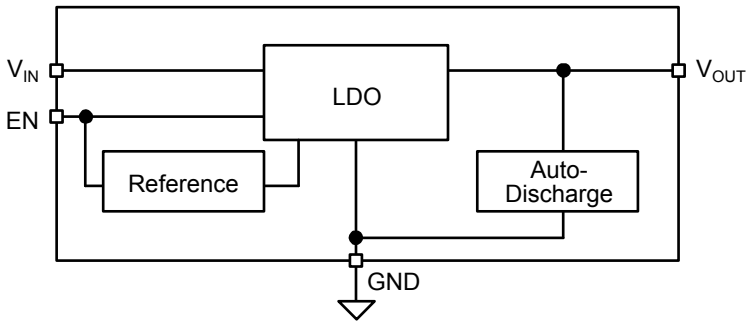

MIC5366 Block Diagram

Ordering Information

Part Number	Marking Code	Output Voltage	Temperature Range	Package	Lead Finish
MIC5365-1.0YMT	5C	1.0V	–40°C to +125°C	4-Pin 1mm x 1mm Thin MLF®	Pb-Free
MIC5365-1.2YMT	54	1.2V	–40°C to +125°C	4-Pin 1mm x 1mm Thin MLF®	Pb-Free
MIC5365-1.3YMT	55	1.3V	–40°C to +125°C	4-Pin 1mm x 1mm Thin MLF®	Pb-Free
MIC5365-1.5YMT	5F	1.5V	–40°C to +125°C	4-Pin 1mm x 1mm Thin MLF®	Pb-Free
MIC5365-1.8YMT	5G	1.8V	–40°C to +125°C	4-Pin 1mm x 1mm Thin MLF®	Pb-Free
MIC5365-2.0YMT	5H	2.0V	–40°C to +125°C	4-Pin 1mm x 1mm Thin MLF®	Pb-Free
MIC5365-2.5YMT	5J	2.5V	–40°C to +125°C	4-Pin 1mm x 1mm Thin MLF®	Pb-Free
MIC5365-2.6YMT	5K	2.6V	–40°C to +125°C	4-Pin 1mm x 1mm Thin MLF®	Pb-Free
MIC5365-2.7YMT	5L	2.7V	–40°C to +125°C	4-Pin 1mm x 1mm Thin MLF®	Pb-Free
MIC5365-2.8YMT	5M	2.8V	–40°C to +125°C	4-Pin 1mm x 1mm Thin MLF®	Pb-Free
MIC5365-2.85YMT	5N	2.85V	–40°C to +125°C	4-Pin 1mm x 1mm Thin MLF®	Pb-Free
MIC5365-2.9YMT	5O	2.9V	–40°C to +125°C	4-Pin 1mm x 1mm Thin MLF®	Pb-Free
MIC5365-3.0YMT	5P	3.0V	–40°C to +125°C	4-Pin 1mm x 1mm Thin MLF®	Pb-Free
MIC5365-3.1YMT	5Q	3.1V	–40°C to +125°C	4-Pin 1mm x 1mm Thin MLF®	Pb-Free
MIC5365-3.3YMT	5S	3.3V	–40°C to +125°C	4-Pin 1mm x 1mm Thin MLF®	Pb-Free
MIC5365-1.0YC5	65C	1.0V	–40°C to +125°C	SC-70-5	Pb-Free
MIC5365-1.2YC5	654	1.2V	–40°C to +125°C	SC-70-5	Pb-Free
MIC5365-1.3YC5	655	1.3V	–40°C to +125°C	SC-70-5	Pb-Free
MIC5365-1.5YC5	65F	1.5V	–40°C to +125°C	SC-70-5	Pb-Free
MIC5365-1.8YC5	65G	1.8V	–40°C to +125°C	SC-70-5	Pb-Free
MIC5365-2.0YC5	65H	2.0V	–40°C to +125°C	SC-70-5	Pb-Free
MIC5365-2.5YC5	65J	2.5V	–40°C to +125°C	SC-70-5	Pb-Free
MIC5365-2.6YC5	65K	2.6V	–40°C to +125°C	SC-70-5	Pb-Free
MIC5365-2.7YC5	65L	2.7V	–40°C to +125°C	SC-70-5	Pb-Free
MIC5365-2.8YC5	65M	2.8V	–40°C to +125°C	SC-70-5	Pb-Free
MIC5365-2.85YC5	65N	2.85V	–40°C to +125°C	SC-70-5	Pb-Free
MIC5365-2.9YC5	65O	2.9V	–40°C to +125°C	SC-70-5	Pb-Free
MIC5365-3.0YC5	65P	3.0V	–40°C to +125°C	SC-70-5	Pb-Free
MIC5365-3.3YC5	65S	3.3V	–40°C to +125°C	SC-70-5	Pb-Free
MIC5366-1.0YMT*	6C	1.0V	–40°C to +125°C	4-Pin 1mm x 1mm Thin MLF®	Pb-Free
MIC5366-1.2YMT*	64	1.2V	–40°C to +125°C	4-Pin 1mm x 1mm Thin MLF®	Pb-Free
MIC5366-1.3YMT*	65	1.3V	–40°C to +125°C	4-Pin 1mm x 1mm Thin MLF®	Pb-Free
MIC5366-1.5YMT*	6F	1.5V	–40°C to +125°C	4-Pin 1mm x 1mm Thin MLF®	Pb-Free
MIC5366-1.8YMT*	6G	1.8V	–40°C to +125°C	4-Pin 1mm x 1mm Thin MLF®	Pb-Free
MIC5366-2.0YMT*	6H	2.0V	–40°C to +125°C	4-Pin 1mm x 1mm Thin MLF®	Pb-Free
MIC5366-2.5YMT*	6J	2.5V	–40°C to +125°C	4-Pin 1mm x 1mm Thin MLF®	Pb-Free
MIC5366-2.6YMT*	6K	2.6V	–40°C to +125°C	4-Pin 1mm x 1mm Thin MLF®	Pb-Free
MIC5366-2.7YMT*	6L	2.7V	–40°C to +125°C	4-Pin 1mm x 1mm Thin MLF®	Pb-Free
MIC5366-2.8YMT*	6M	2.8V	–40°C to +125°C	4-Pin 1mm x 1mm Thin MLF®	Pb-Free
MIC5366-2.85YMT*	6N	2.85V	–40°C to +125°C	4-Pin 1mm x 1mm Thin MLF®	Pb-Free
MIC5366-2.9YMT*	6O	2.9V	–40°C to +125°C	4-Pin 1mm x 1mm Thin MLF®	Pb-Free
MIC5366-3.0YMT*	6P	3.0V	–40°C to +125°C	4-Pin 1mm x 1mm Thin MLF®	Pb-Free
MIC5366-3.3YMT*	6S	3.3V	–40°C to +125°C	4-Pin 1mm x 1mm Thin MLF®	Pb-Free

Part Number	Marking Code	Output Voltage	Temperature Range	Package	Lead Finish
MIC5366-1.0YC5*	66C	1.0V	–40°C to +125°C	SC-70-5	Pb-Free
MIC5366-1.2YC5*	664	1.2V	–40°C to +125°C	SC-70-5	Pb-Free
MIC5366-1.3YC5*	665	1.3V	–40°C to +125°C	SC-70-5	Pb-Free
MIC5366-1.5YC5*	66F	1.5V	–40°C to +125°C	SC-70-5	Pb-Free
MIC5366-1.8YC5*	66G	1.8V	–40°C to +125°C	SC-70-5	Pb-Free
MIC5366-2.0YC5*	66H	2.0V	–40°C to +125°C	SC-70-5	Pb-Free
MIC5366-2.5YC5*	66J	2.5V	–40°C to +125°C	SC-70-5	Pb-Free
MIC5366-2.6YC5*	66K	2.6V	–40°C to +125°C	SC-70-5	Pb-Free
MIC5366-2.7YC5*	66L	2.7V	–40°C to +125°C	SC-70-5	Pb-Free
MIC5366-2.8YC5*	66M	2.8V	–40°C to +125°C	SC-70-5	Pb-Free
MIC5366-2.85YC5*	66N	2.85V	–40°C to +125°C	SC-70-5	Pb-Free
MIC5366-2.9YC5*	66O	2.9V	–40°C to +125°C	SC-70-5	Pb-Free
MIC5366-3.0YC5*	66P	3.0V	–40°C to +125°C	SC-70-5	Pb-Free
MIC5366-3.3YC5*	66S	3.3V	–40°C to +125°C	SC-70-5	Pb-Free

Notes:

1. Other voltages available. Contact Micrel for details.
2. Under bar symbol (_) may not be to scale.
3. Thin MLF® ▲ = Pin 1 identifier.
4. Thin MLF® is a GREEN RoHS compliant package. Lead finish is NiPdAu. Mold compound is Halogen Free.

* MIC5366 offers Auto-Discharge function.

Pin Configuration

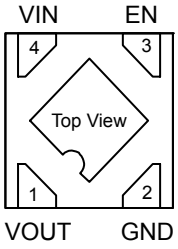

4-Pin 1mm x 1mm Thin MLF® (MT)
Fixed Version

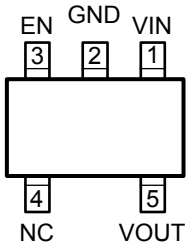

5-Pin SC-70 (C5)
Fixed Version

Pin Description

Pin Number	Pin Name Thin MLF-4	Pin Name SC-70-5	Pin Function
1	VOUT	–	Output Voltage.
1	–	VIN	Supply Input.
2	GND	GND	Ground
3	EN	EN	Enable Input: Active High. High = ON; Low = OFF. Do not leave floating.
4	VIN	–	Supply Input.
4	–	NC	No connect. Not internally connected.
5	–	VOUT	Output Voltage.
EP	HS Pad	NA	Exposed Heatsink Pad.

Absolute Maximum Ratings[1]

Supply Voltage (V_{IN}) ..... 0V to 6V
Enable Voltage (V_{EN}) ..... 0V to V_{IN}
Power Dissipation (P_D) ..... Internally Limited[3]
Lead Temperature (soldering, 3µsec) ..... 260°C
Junction Temperature (T_J) ..... –40°C to +150°C
Storage Temperature (T_s) ..... –65°C to +150°C
ESD Rating[4] 2kV

Operating Ratings[2]

Supply Voltage (V_{IN}) ..... 2.5V to 5.5V
Enable Voltage (V_{EN}) ..... 0V to V_{IN}
Junction Temperature (T_J) ..... –40°C to +125°C
Junction Thermal Resistance
1x1 Thin MLF-4 (θ_{JA}) ..... 250°C/W
SC-70-5 (θ_{JA}) ..... 256.5°C/W

Electrical Characteristics[5]

$V_{IN} = V_{EN} = V_{OUT} + 1V$; $C_{IN} = C_{OUT} = 1\mu F$; $I_{OUT} = 100\mu A$; $T_J = 25°C$, **bold** values indicate –40°C to +125°C, unless noted.

Parameter	Condition	Min	Typ	Max	Units
Output Voltage Accuracy	Variation from nominal V_{OUT}	–2.0		+2.0	%
	Variation from nominal V_{OUT}; –40°C to +125°C	**–3.0**		**+3.0**	%
Line Regulation	$V_{IN} = V_{OUT}$ +1V to 5.5V; $I_{OUT} = 100\mu A$		0.02	**0.3**	%
Load Regulation[6]	$I_{OUT} = 100\mu A$ to 150mA		0.3	1	%
Dropout Voltage[7]	$I_{OUT} = 50mA$; $V_{OUT} \geq 2.8V$		55	**110**	mV
	$I_{OUT} = 150mA$; $V_{OUT} \geq 2.8V$		155	**310**	mV
	$I_{OUT} = 50mA$; $V_{OUT} < 2.8V$		60	**135**	mV
	$I_{OUT} = 150mA$; $V_{OUT} < 2.8V$		180	**380**	mV
Ground Pin Current[8]	$I_{OUT} = 0mA$		29	**39**	µA
Ground Pin Current in Shutdown	$V_{EN} \leq 0.2V$		0.05	1	µA
Ripple Rejection	f = up to 1kHz; $C_{OUT} = 1\mu F$		80		dB
	f = 1kHz – 10kHz; $C_{OUT} = 1\mu F$		65		dB
Current Limit	$V_{OUT} = 0V$	200	325	550	mA
Output Voltage Noise	$C_{OUT} = 1\mu F$, 10Hz to 100kHz		200		μV_{RMS}
Auto-Discharge NFET Resistance	MIC5366 Only; $V_{EN} = 0V$; $V_{IN} = 3.6V$; $I_{OUT} = –3mA$		30		Ω
Enable Input					
Enable Input Voltage	Logic Low			**0.2**	V
	Logic High	**1.2**			V
Enable Input Current	$V_{IL} \leq 0.2V$		0.01	**1**	µA
	$V_{IH} \geq 1.2V$		0.01	**1**	µA
Turn-on Time	$C_{OUT} = 1\mu F$; $I_{OUT} = 150mA$		50	**125**	µs

Notes:

1. Exceeding the absolute maximum rating may damage the device.
2. The device is not guaranteed to function outside its operating rating.
3. The maximum allowable power dissipation of any T_A (ambient temperature) is $P_{D(max)} = T_{J(max)} – T_A) / \theta_{JA}$. Exceeding the maximum allowable power dissipation will result in excessive die temperature, and the regulator will go into thermal shutdown.
4. Devices are ESD sensitive. Handling precautions recommended. Human body model, 1.5kΩ in series with 100pF.
5. Specification for packaged product only.
6. Regulation is measured at constant junction temperature using low duty cycle pulse testing, changes in output voltage due to heating effects are covered by the thermal regulation specification.
7. Dropout voltage is defined as the input-to-output differential at which the output voltage drops 2% below its nominal value measured at 1V differential. For outputs below 2.5V, dropout voltage is the input-to-output differential with the minimum input voltage 2.5V.
8. Ground pin current is the regulator quiescent current. The total current drawn from the supply is the sum of the load current plus the ground pin current.

Typical Characteristics

Power Supply Rejection Ratio

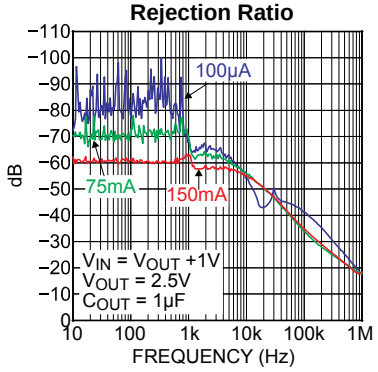

Dropout Voltage vs. Load Current

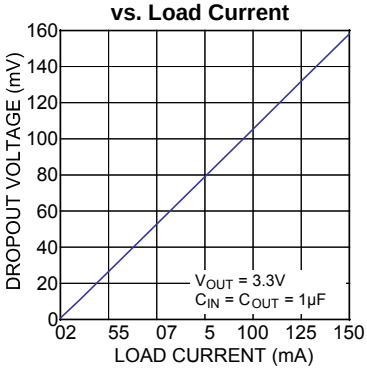

Dropout Voltage vs. Temperature

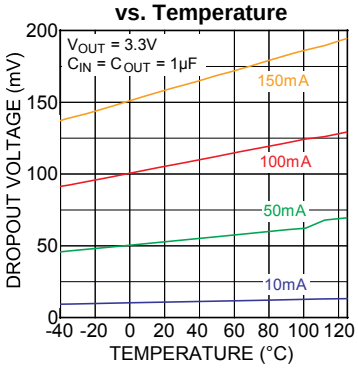

Ground Current vs. Supply Voltage

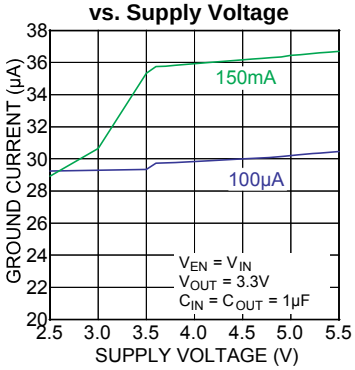

Ground Current vs. Load Current

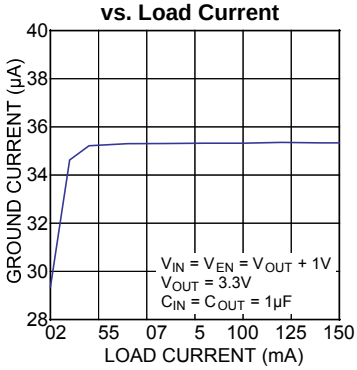

Ground Current vs. Temperature

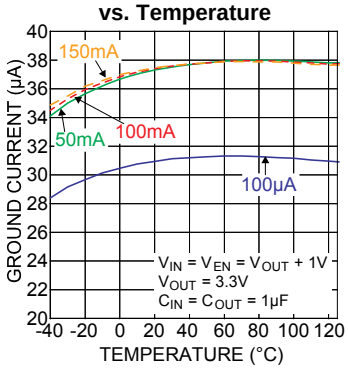

Output Voltage vs. Load Current

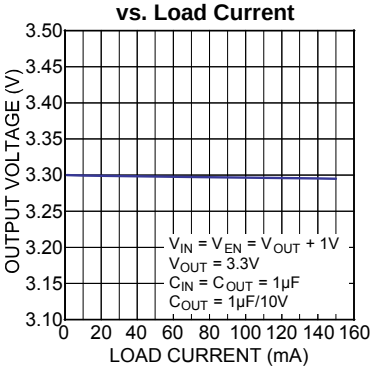

Output Voltage vs. Supply Voltage

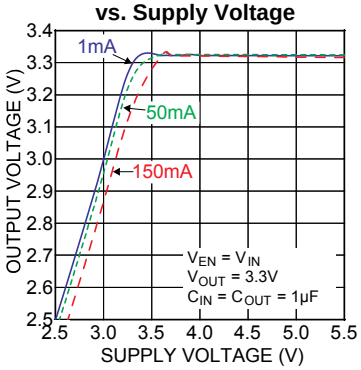

Output Voltage vs. Temperature

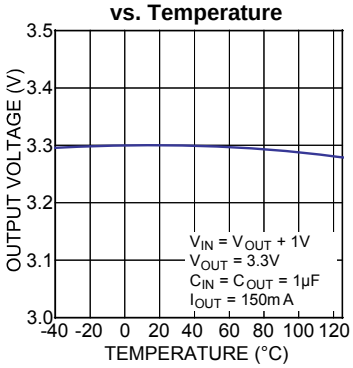

Current Limit vs. Supply Voltage

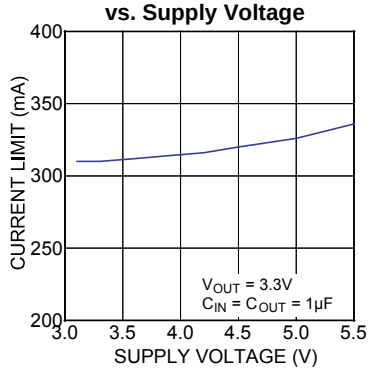

Output Noise Spectral Density

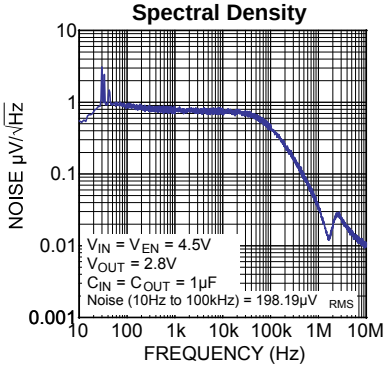

Functional Characteristics

Enable Turn-On

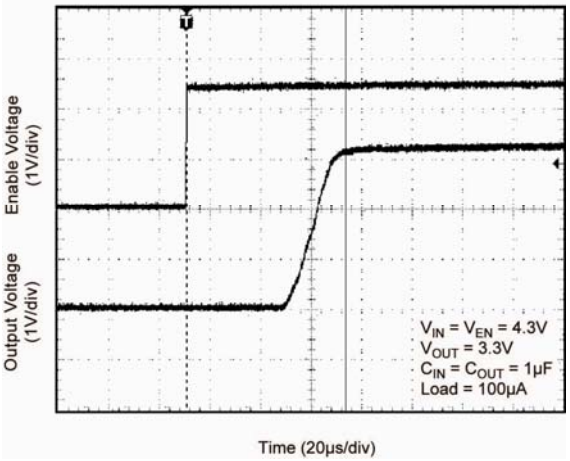

Enable Turn-On

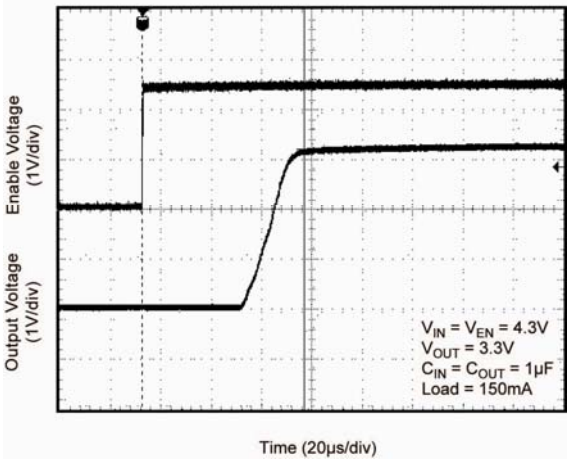

Load Transient

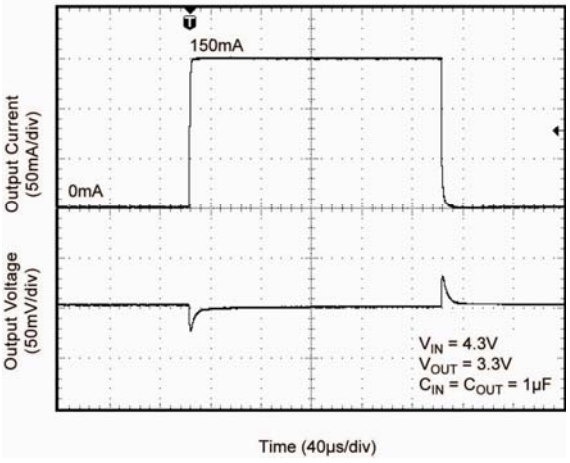

Load Transient

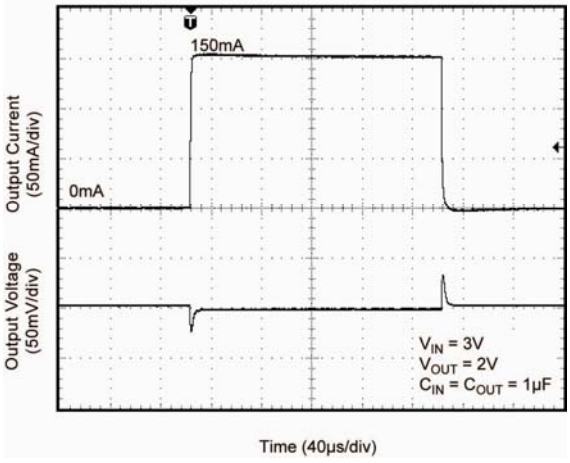

Line Transient

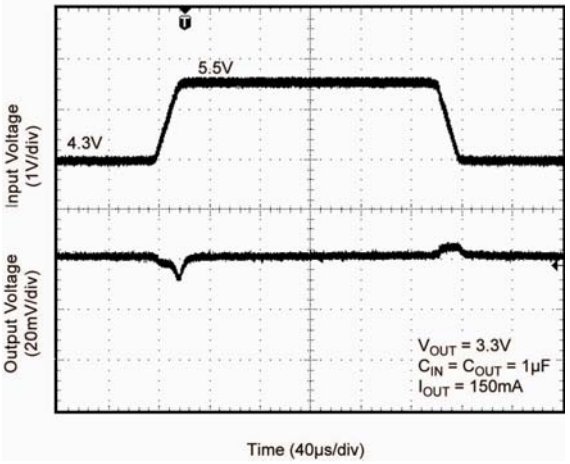

MIC5366 Auto Discharge (No Load)

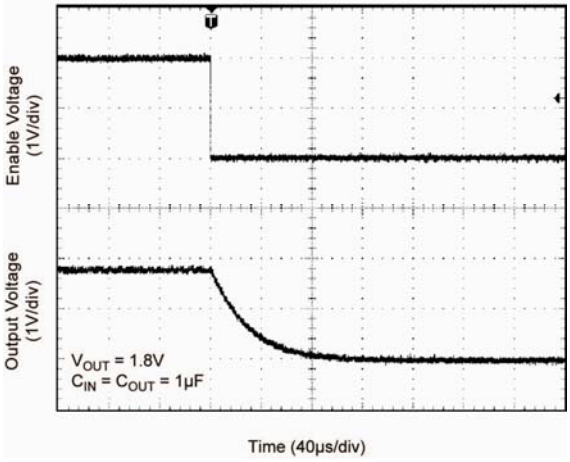

Application Information

MIC5365 and MIC5366 are Low noise 150mA LDOs. The MIC5366 includes an auto-discharge circuit that is switched on when the regulator is disabled through the Enable pin. The MIC5365/6 regulator is fully protected from damage due to fault conditions, offering linear current limiting and thermal shutdown.

Input Capacitor

The MIC5365/6 is a high-performance, high bandwidth device. An input capacitor of 1µF is required from the input to ground to provide stability. Low-ESR ceramic capacitors provide optimal performance at a minimum of space. Additional high-frequency capacitors, such as small-valued NPO dielectric-type capacitors, help filter out high-frequency noise and are good practice in any RF-based circuit. X5R or X7R dielectrics are recommended for the input capacitor. Y5V dielectrics lose most of their capacitance over temperature and are therefore, not recommended.

Output Capacitor

The MIC5365/6 requires an output capacitor of 1µF or greater to maintain stability. The design is optimized for use with low-ESR ceramic chip capacitors. High ESR capacitors are not recommended because they may cause high frequency oscillation. The output capacitor can be increased, but performance has been optimized for a 1µF ceramic output capacitor and does not improve significantly with larger capacitance.

X7R/X5R dielectric-type ceramic capacitors are recommended because of their temperature performance. X7R-type capacitors change capacitance by 15% over their operating temperature range and are the most stable type of ceramic capacitors. Z5U and Y5V dielectric capacitors change value by as much as 50% and 60%, respectively, over their operating temperature ranges. To use a ceramic chip capacitor with Y5V dielectric, the value must be much higher than an X7R ceramic capacitor to ensure the same minimum capacitance over the equivalent operating temperature range.

No-Load Stability

Unlike many other voltage regulators, the MIC5365/6 will remain stable and in regulation with no load. This is especially important in CMOS RAM keep-alive applications.

Enable/Shutdown

The MIC5365/6 comes with an active-high enable pin that allows the regulator to be disabled. Forcing the enable pin low disables the regulator and sends it into a "zero" off-mode-current state. In this state, current consumed by the regulator goes nearly to zero. Forcing the enable pin high enables the output voltage. The active-high enable pin uses CMOS technology and the enable pin cannot be left floating; a floating enable pin may cause an indeterminate state on the output.

Thermal Considerations

The MIC5365/6 is designed to provide 150mA of continuous current in a very small package. Maximum ambient operating temperature can be calculated based on the output current and the voltage drop across the part. For example if the input voltage is 3.6V, the output voltage is 2.8V, and the output current = 150mA. The actual power dissipation of the regulator circuit can be determined using the equation:

$$P_D = (V_{IN} – V_{OUT1})\, I_{OUT} + V_{IN}\, I_{GND}$$

Because this device is CMOS and the ground current is typically <100µA over the load range, the power dissipation contributed by the ground current is < 1% and can be ignored for this calculation.

$$P_D = (3.6V – 2.8V) \times 150mA$$

$$P_D = 0.120W$$

To determine the maximum ambient operating temperature of the package, use the junction-to-ambient thermal resistance of the device and the following basic equation:

$$P_{D(max)} = \left(\frac{T_{J(max)} - T_A}{\theta_{JA}} \right)$$

$T_{J(max)}$ = 125°C, the maximum junction temperature of the die, θ_{JA} thermal resistance = 250°C/W for the YMT package and 256.5°C/W for the SC-70-5 package.

Substituting P_D for $P_{D(max)}$ and solving for the ambient operating temperature will give the maximum operating conditions for the regulator circuit. The junction-to-ambient thermal resistance for the minimum footprint is 250°C/W.

The maximum power dissipation must not be exceeded for proper operation.

For example, when operating the MIC5365-2.8YMT at an input voltage of 3.6V and 150mA load with a minimum footprint layout, the maximum ambient operating temperature T_A can be determined as follows:

$$0.120W = (125°C – T_A)/(250°C/W)$$

$$T_A = 95°C$$

Therefore the maximum ambient operating temperature of 95°C is allowed in a 1mm x 1mm MLF® package. For a full discussion of heat sinking and thermal effects on voltage regulators, refer to the "Regulator Thermals" section of *Micrel's Designing with Low-Dropout Voltage Regulators* handbook. This information can be found on Micrel's website at:

http://www.micrel.com/_PDF/other/LDOBk_ds.pdf

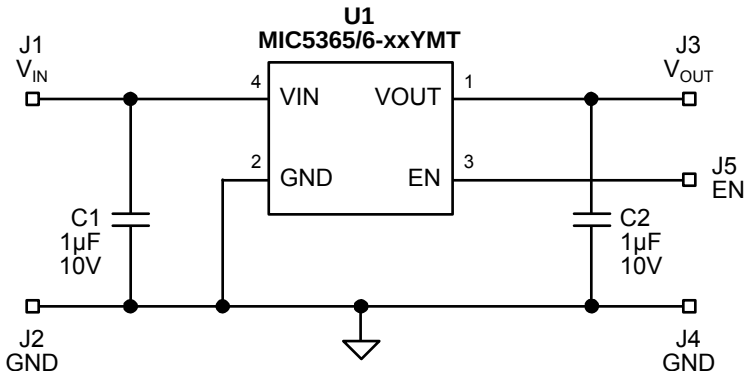

Bill of Materials

Item	Part Number	Manufacturer	Description	Qty.
C1, C2	GRM155R61A105KE15D	Murata[1]	Capacitor, 1µF Ceramic, 10V, X7R, Size 0402	2
U1	**MIC5365/6-xxYMT**	**Micrel, Inc.[3]**	**High Performance Single 150mA LDO**	**1**

Notes:

1. Murata: www.murata.com
2. **Micrel, Inc.: www.micrel.com**

PCB Layout Recommendations (1mm x 1mm Thin MLF®)

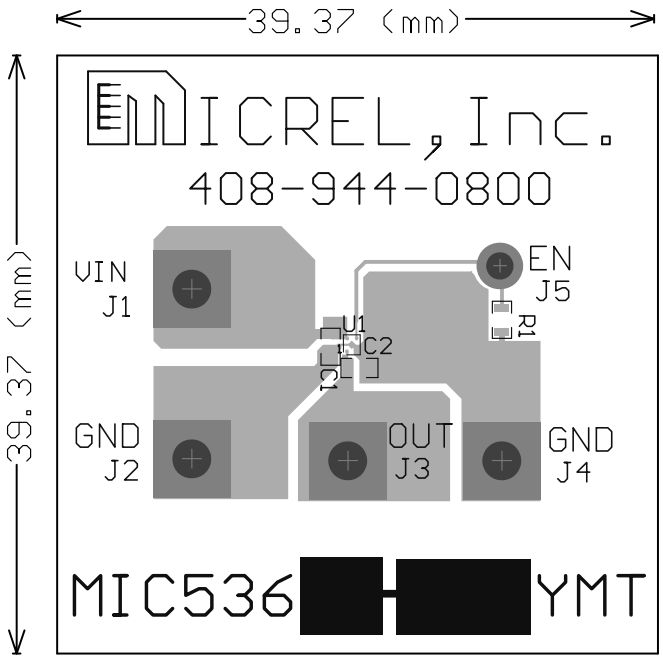

Top Layer

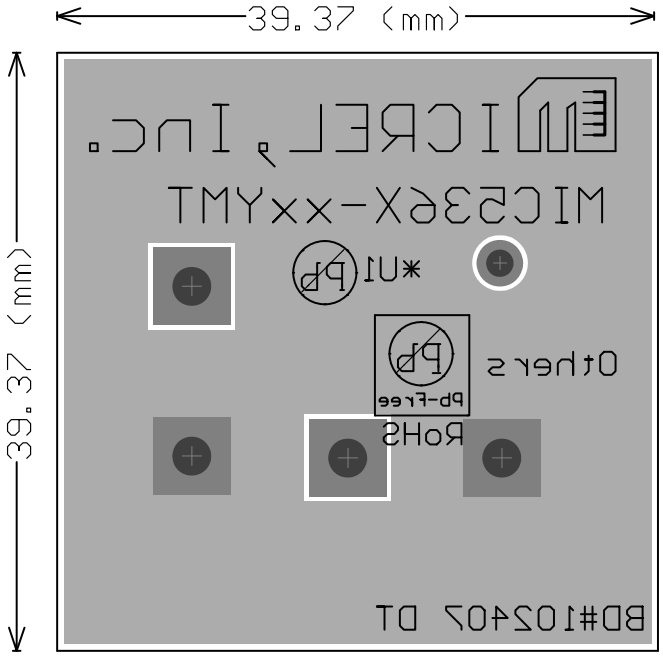

Bottom Layer

PCB Layout Recommendations (SC-70-5)

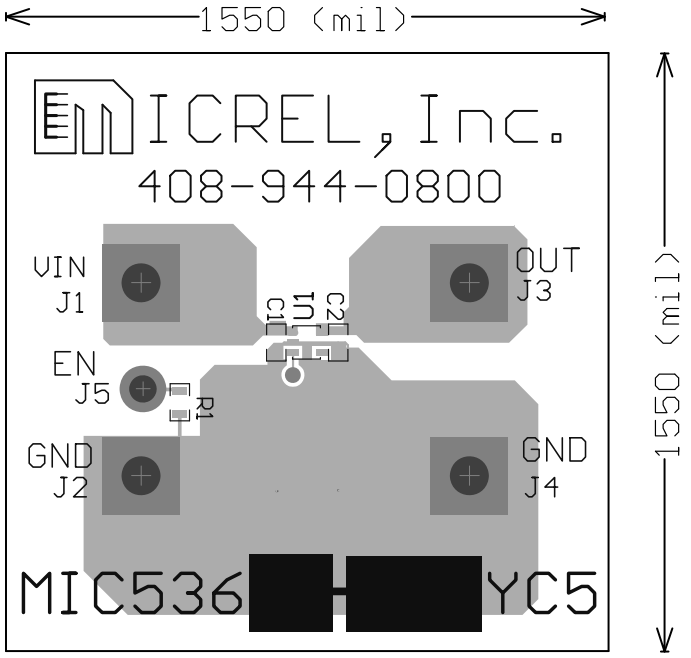

Top Layer

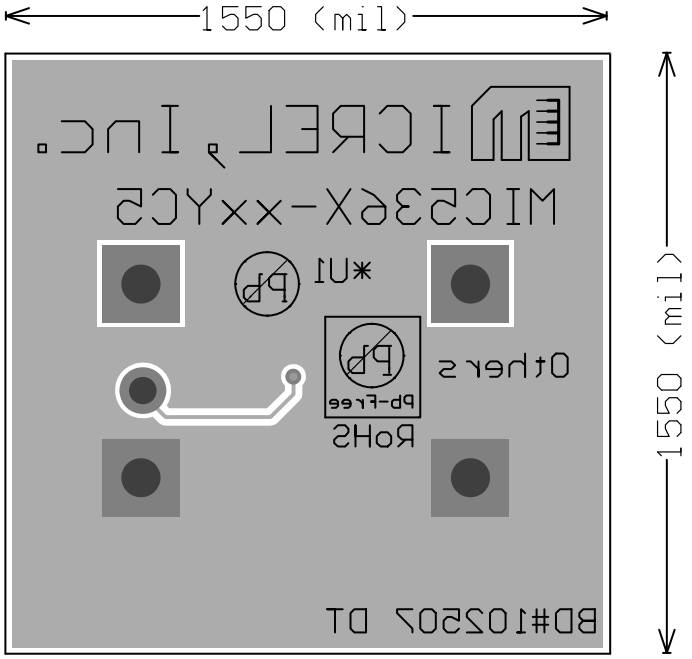

Bottom Layer

Package Information

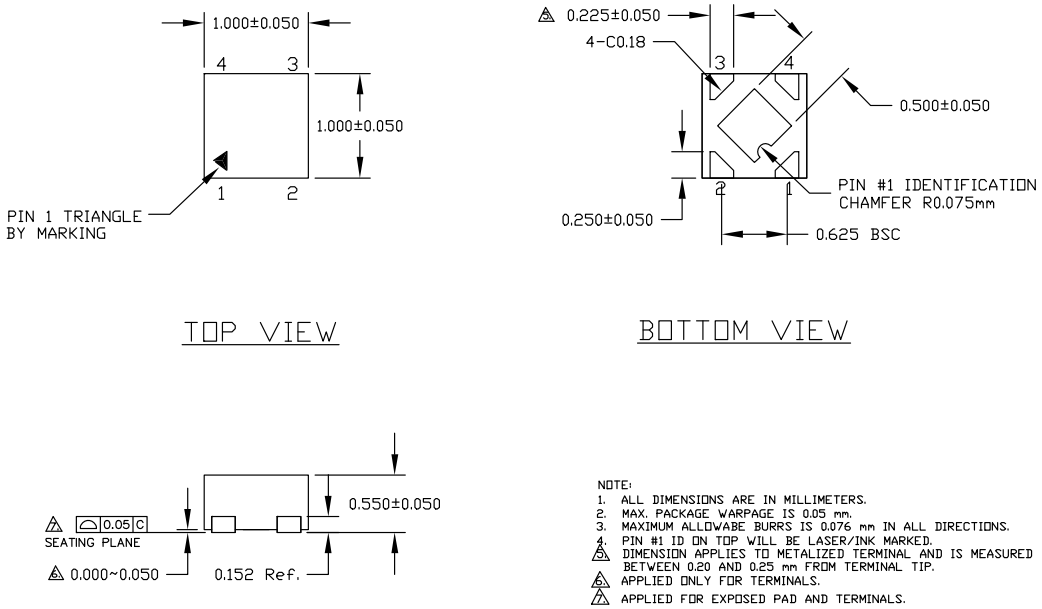

4-Pin 1mm x 1mm Thin MLF® (MT)

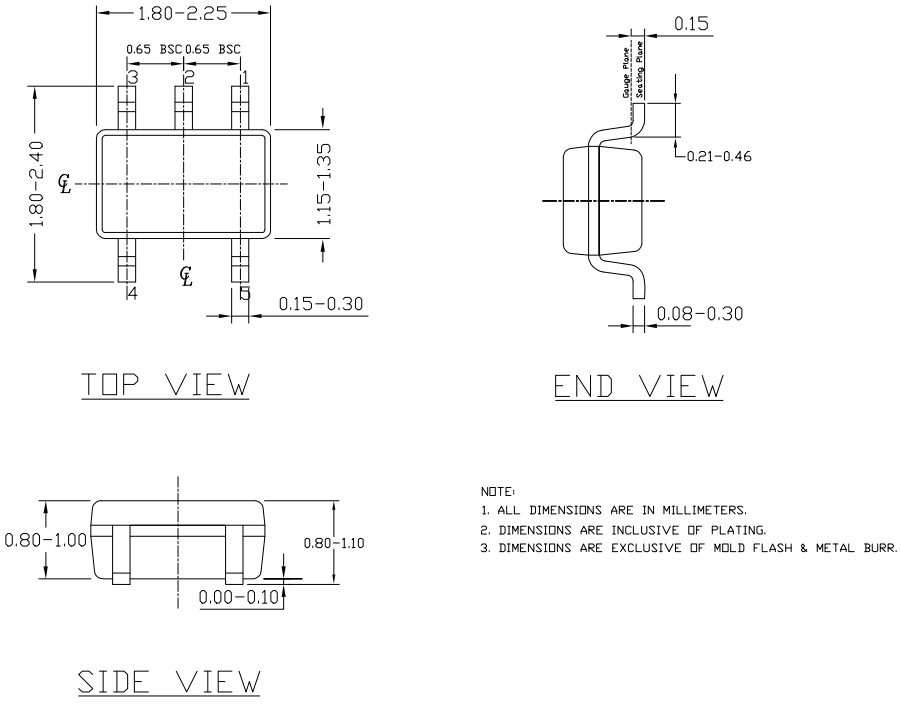

5-Pin SC-70 (C5)

MICREL, INC. 2180 FORTUNE DRIVE SAN JOSE, CA 95131 USA
TEL +1 (408) 944-0800 FAX +1 (408) 474-1000 WEB http://www.micrel.com

The information furnished by Micrel in this data sheet is believed to be accurate and reliable. However, no responsibility is assumed by Micrel for its use. Micrel reserves the right to change circuitry and specifications at any time without notification to the customer.

Micrel Products are not designed or authorized for use as components in life support appliances, devices or systems where malfunction of a product can reasonably be expected to result in personal injury. Life support devices or systems are devices or systems that (a) are intended for surgical implant into the body or (b) support or sustain life, and whose failure to perform can be reasonably expected to result in a significant injury to the user. A Purchaser's use or sale of Micrel Products for use in life support appliances, devices or systems is a Purchaser's own risk and Purchaser agrees to fully indemnify Micrel for any damages resulting from such use or sale.

© 2008 Micrel, Incorporated.