MIC5268

150mA µCap CMOS LDO Regulator w/Power Good

General Description

The MIC5268 is an efficient, precise CMOS voltage regulator with power good output. The MIC5268 offers better than 3% initial accuracy, and constant ground current (typically 100µA) over load.

The MIC5268 also works with low-ESR ceramic capacitors, reducing the amount of board space necessary for power applications, critical in hand-held wireless devices.

Key features include current limit, thermal shutdown, a push-pull output for faster transient response, and an active clamp to speed up device turnoff. Available in the IttyBitty™ SOT-23-5 package, the MIC5268 is a fixed 1.2V regulator.

Data sheets and support documentation can be found on Micrel's web site at www.micrel.com.

Features

- Power Good indicator
- Load independent, ultra-low ground current: 100µA
- 150mA output current
- Current limiting
- Thermal shutdown
- Tight load and line regulation
- "Zero" off-mode current
- Stability with low-ESR capacitors
- Fast transient response
- TTL-Logic-controlled enable input

Applications

- Processor power-up sequencing
- Laptop, notebook, and palmtop computers
- PCMCIA V_{CC} and V_{PP} regulation/switching

Ordering Information

Part Number		Marking		Voltage	Junction Temp. Range[1]	Package
Standard	Pb-Free	Standard	Pb-Free			
MIC5268-1.2BM5	MIC5268-1.2YM5	L512	L512	1.2V	–40° to +125°C	5-Pin SOT-23

Note:

1. Other Voltage available. Contact Micrel Marketing for details.

Typical Application

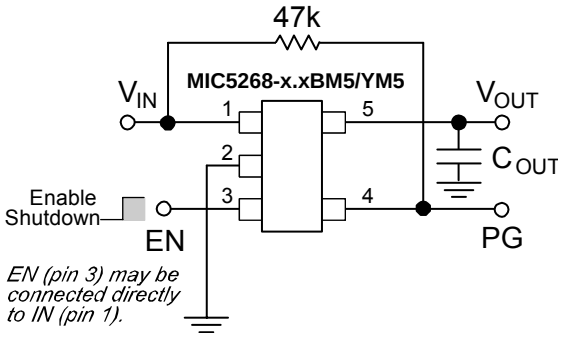

1.2V Regulator with Power Good

IttyBitty is a trademark of Micrel, Inc.

Pin Configuration

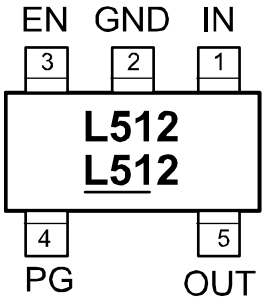

MIC5268-x.x-BM5/YM5
5-Pin SOT-23 (M5)

Pin Description

Pin Number	Pin Name	Pin Function
1	IN	Supply Input
2	GND	Ground
3	EN	Enable/Shutdown (Input): CMOS compatible input. Logic high = enable; logic low = shutdown. Do not leave open.
4	PG	Power Good Output
5	OUT	Regulator Output

Absolute Maximum Ratings[1]

Supply Input Voltage (V_{IN}) ..... 0V to +7V
Enable Input Voltage (V_{EN}) ..... 0V to V_{IN}
Flag Output Voltage (V_{PG}) ..... 0V to V_{IN}
Junction Temperature (T_J) ..... +150°C
Lead Temperature (soldering, 5sec.) ..... 260°C
Storage Temperature (T_s) ..... –65°C to +150°C
EDS Rating[3]

Operating Ratings[2]

Supply voltage (V_{IN}) ..... +2.7V to +6V
Enable Input Voltage (V_{EN}) ..... 0V to V_{IN}
Flag Output Voltage (V_{PG}) ..... 0V to V_{IN}
Junction Temperature (T_J) ..... –40°C to +125°C
Thermal Resistance
SOT-23 (θ_{JA}) ..... 235°C/W

Electrical Characteristics

V_{IN} = xx; R_L =xx; T_A = 25°C, bold values indicate –40°C≤ T_A ≤ +85°C, unless noted.

Symbol	Parameter	Condition	Min	Typ	Max	Units
V_O	Output Voltage Accuracy	I_{OUT} = 100µA	–3 **–4**		3 **4**	% %
ΔV_{LNR}	Line Regulation	V_{IN} = 2.7V to 6V	**–0.3**		**0.3**	%/V
ΔV_{LNR}	Load Regulation	I_{OUT} = 0.1mA to 150mA, **Note 4**		3	5	%
I_Q	Quiescent Current	V_{EN} ≤ 0.4V (shutdown) PG = NC		0.45	1	µA
I_{GND}	Ground Pin Current, **Note 5**	I_{OUT} = 0mA; V_{IN} = 6.0V		110	150	µA
		I_{OUT} = 150mA; V_{IN} = 6.0V		110	150	µA
I_{LIM}	Current Limit	V_{OUT} = 0V	160	350		mA
Enable Input						
V_{IL}	Enable Input Logic-Low Voltage	V_{IN} = 5.5V, regulator shutdown			**0.4**	V
V_{IH}	Enable Input Logic-High Voltage	V_{IN} = 5.5V, regulator enabled	**1.6**			V
I_{EN}	Enable Input Current	V_{IL} ≤ 0.4V; V_{IN} = 5.5V		0.01		µA
		V_{IH} ≥ 1.6V; V_{IN} = 5.5V		0.01		µA
Thermal Protection						
	Thermal Shutdown Temperature			150		°C
	Thermal Shutdown Hysteresis			10		°C
Power Good, Note 6						
V_{PG}	Low Threshold High Threshold	% of V_{OUT} (PG ON) % of V_{OUT} (PG OFF)	88		 97	% %
V_{OL}	PG Output Logic-Low Voltage	I_L = 10mA		250	**500**	mV
I_{PG}	Power Good Leakage Current	power good off, V_{PG} = 5.5V		0.01		µA
V_{PG} Delay	Delay time to Power Good	See Timing Diagram	1		5	ms

Notes:

1. Exceeding the absolute maximum rating may damage the device.
2. The device is not guaranteed to function outside its operating rating.
3. Devices are ESD sensitive. Handling precautions recommended.
4. Regulation is measured at constant junction temperature using low duty cycle pulse testing. Parts are tested for load regulation in the load range from 0.1mA to 150mA. Changes in output voltage due to heating effects are covered by the thermal regulation specification.
5. Ground pin current is the regulator quiescent current. The total current drawn from the supply is the sum of the load current plus the ground pin current.
6. The power good is a function of the output voltage being 5% low and the detection of one of the following: overcurrent, overtemperature or dropout. See “Applications Information” section for additional information.

Typical Characteristics

Ground Current vs. Input Voltage

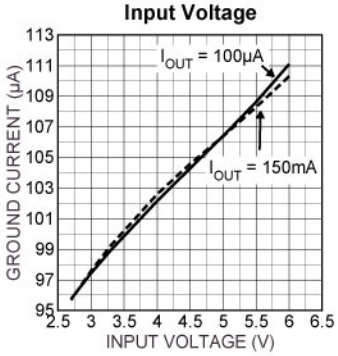

Ground Current vs. Output Current

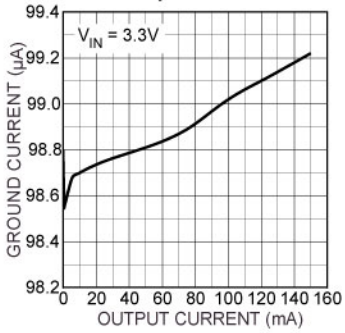

Ground Current vs. Temperature

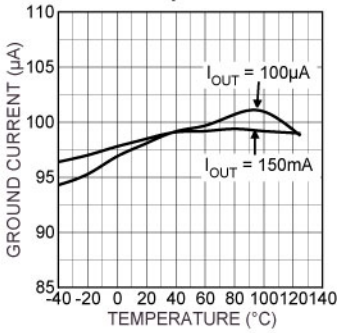

Short Circuit Current vs. Input Voltage

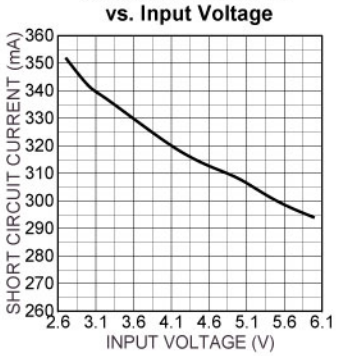

Short Circuit Current vs. Temperature

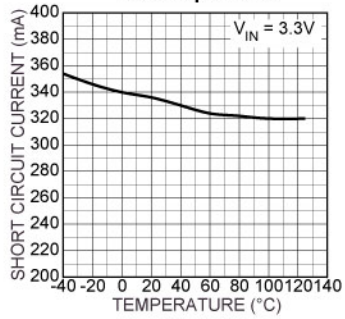

Power Good Delay vs. Input Voltage

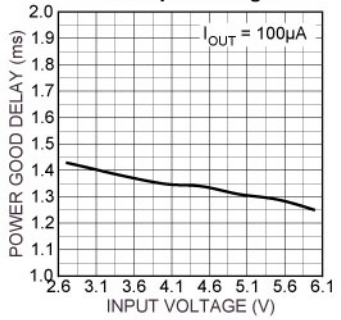

Power Good Delay vs. Temperature

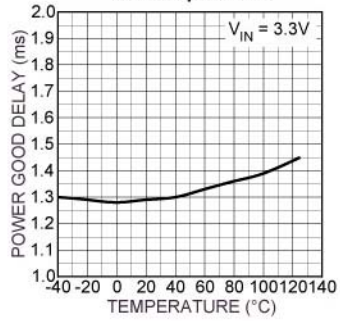

Output Voltage vs. Input Voltage

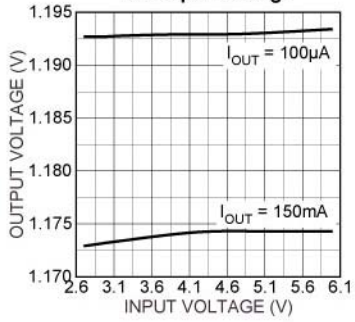

Output Voltage vs. Output Current

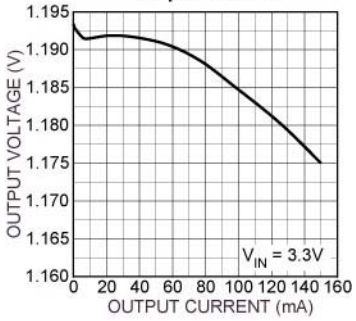

Output Voltage vs. Temperature

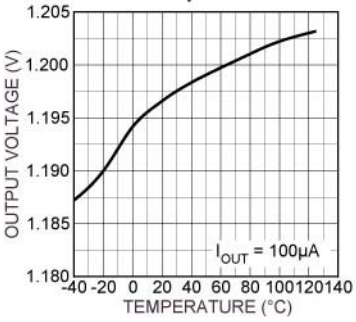

Enable Voltage vs. Input Voltage

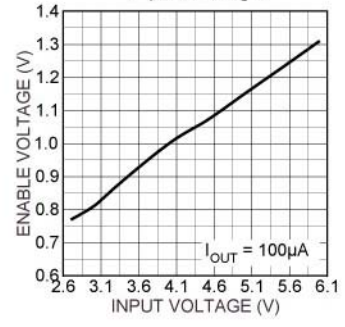

Enable Voltage vs. Temperature

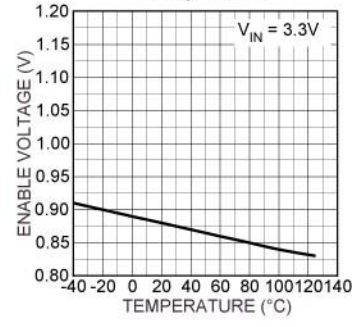

Block Diagram

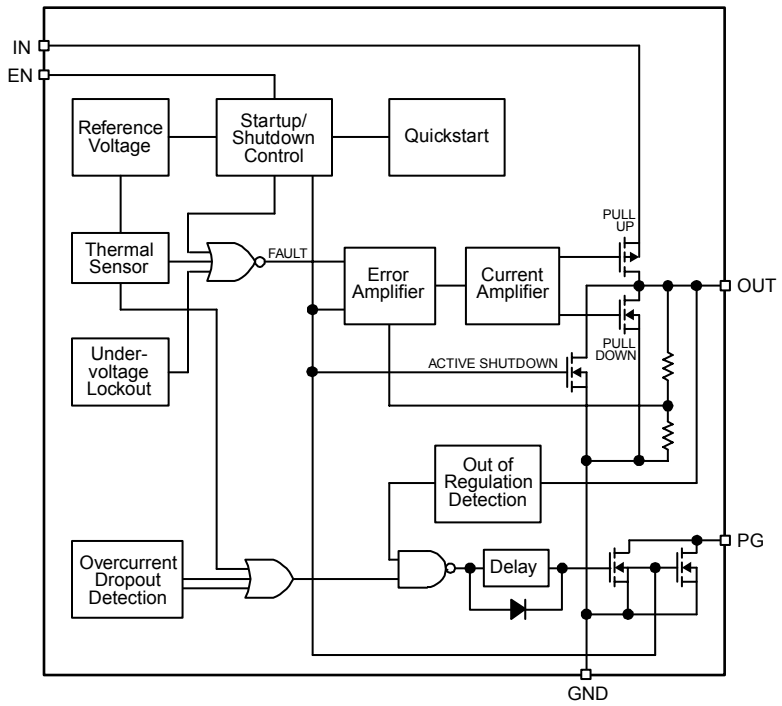

Timing Diagram

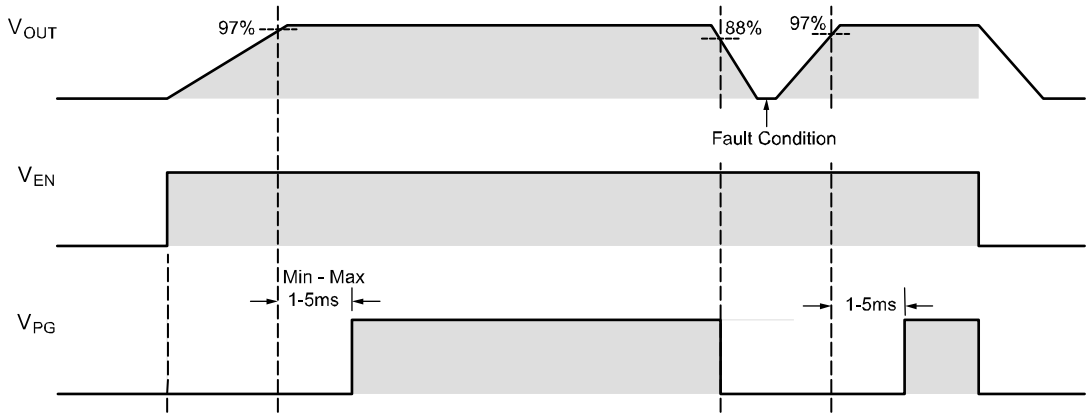

Application Information

Enable/Shutdown

The MIC5268 comes with an active-high enable pin that allows the regulator to be disabled. Forcing the enable pin low disables the regulator and sends it into a "zero" off-mode-current state. In this state, current consumed by the regulator goes nearly to zero. Forcing the enable pin high enables the output voltage. This part is CMOS and the enable pin cannot be left floating; a floating enable pin may cause an indeterminate state on the output.

Input Capacitor

An input capacitor is not required for stability. A 1µF input capacitor is recommended when the bulk ac supply capacitance is more than 10 inches away from the device, or when the supply is a battery.

Output Capacitor

The MIC5268 requires an output capacitor for stability. The design requires 1µF or greater on the output to maintain stability. The capacitor can be a low-ESR ceramic chip capacitor. The MIC5268 has been designed to work specifically with the low-cost, small chip capacitors. Tantalum capacitors can also be used for improved capacitance overtemperature. The value of the capacitor can be increased without bound.

X7R dielectric ceramic capacitors are recommended because of their temperature performance. X7R-type capacitors change capacitance by 15% over their operating temperature range and are the most stable type of ceramic capacitors. Z5U and Y5V dielectric capacitors change value by as much 50% and 60% respectively over their operating temperature ranges. To use a ceramic chip capacitor withY5V dielectric, the value must be much higher than an X7Rceramic or a tantalum capacitor to ensure the same minimum capacitance value over the operating temperature range. Tantalum capacitors have a very stable dielectric (10% over their operating temperature range) and can also be used with this device.

Power Good

The power good output is an open-drain output. It is designed essentially to work as a power-on reset generator once the regulated voltage was up and/or a fault condition. The output of the power good drives low when a fault condition AND an undervoltage detection occurs. The power good output comes back up once the output has reached 97% of its nominal value and a 1ms to 5ms delay has passed. See *Timing Diagram*.

The MIC5268's internal circuit intelligently monitors overcurrent, overtemperature and dropout conditions and ORs these outputs together indicate some fault condition. This output is fed into an on-board delay circuitry that drives the open drain transistor to indicate a fault.

Transient Response

The MIC5268 implements a unique output stage to dramatically improve transient response recovery time. The output is a totem-pole configuration with a P-channel MOSFET pass device and an N-channel MOSFET clamp. The N-channel clamp is a significantly smaller device that prevents the output voltage from overshooting when a heavy load is removed. This feature helps to speed up the transient response by significantly decreasing transient response recovery time during the transition from heavy load (100mA) to light load (100µA).

Active Shutdown

The MIC5268 also features an active shutdown clamp, which is an N-channel MOSFET that turns on when the device is disabled. This allows the output capacitor and load to discharge, de-energizing the load.

Thermal Considerations

The MIC5268 is designed to provide 150mA of continuous current in a very small package. Maximum power dissipation can be calculated based on the output current and the voltage drop across the part. To determine the maximum power dissipation of the package, use the junction-to-ambient thermal resistance of the device and the following basic equation:

$$P_{D(max)} = \left(\frac{T_{J(max)} - T_A}{\theta_{JA}} \right)$$

$T_{J(max)}$ is the maximum junction temperature of the die, 125°C, and T_A is the ambient operating temperature. θ_{JA} is layout dependent; Table 1 shows examples of junction-to-ambient thermal resistance for the MIC5268.

Package	θ_{JA} Recommended Minimum Footprint	θ_{JA} 1" Square Copper Clad	θ_{JC}
SOT-23-5 (M5)	235°C/W	185°C/W	145°C/W

Table 1. Thermal Resistance

The actual power dissipation of the regulator circuit can be determined using the equation:

$$P_D = (V_{IN} - V_{OUT})\, I_{OUT} + V_{IN}\, I_{GND}$$

Substituting $P_{D(max)}$ for P_D and solving for the operating conditions that are critical to the application will give the maximum operating conditions for the regulator circuit. For example, when operating the MIC5268-1.2BM5 at 50°C with a minimum footprint layout, the maximum input voltage for a set output current can be determined as follows:

$$P_{D(max)} = \left(\frac{125°C - 50°C}{235°C} \right)$$

$P_{D(max)}$ = 315mW

The junction-to-ambient thermal resistance for the minimum footprint is 235°C/W, from Table 1. The maximum power dissipation must not be exceeded for proper operation. Using the output voltage of 1.2V and an output current of 150mA, the maximum input voltage can be determined. Because this device is CMOS and the ground current is typically 100µA over the load range, the power dissipation contributed by the ground current is < 1% and can be ignored for this calculation.

$315mW = (V_{IN} – 1.2V)\ 150mA$

$315mW = V_{IN} \cdot 150mA – 195mW$

$510mW = V_{IN} \cdot 150mA$

V_{IN} (max) = 3.4V

Therefore, a 1.2V application at 150mA of output current can accept a maximum input voltage of 3.4V in a SOT-23-5 package. For a full discussion of heat sinking and thermal effects on voltage regulators, refer to the Regulator Thermals section of Micrel's *Designing with Low-Dropout Voltage Regulators* handbook.

Dual-Supply Operation

When used in dual supply systems where the regulator load is returned to a negative supply, the output voltage must be diode clamped to ground.

Package Information

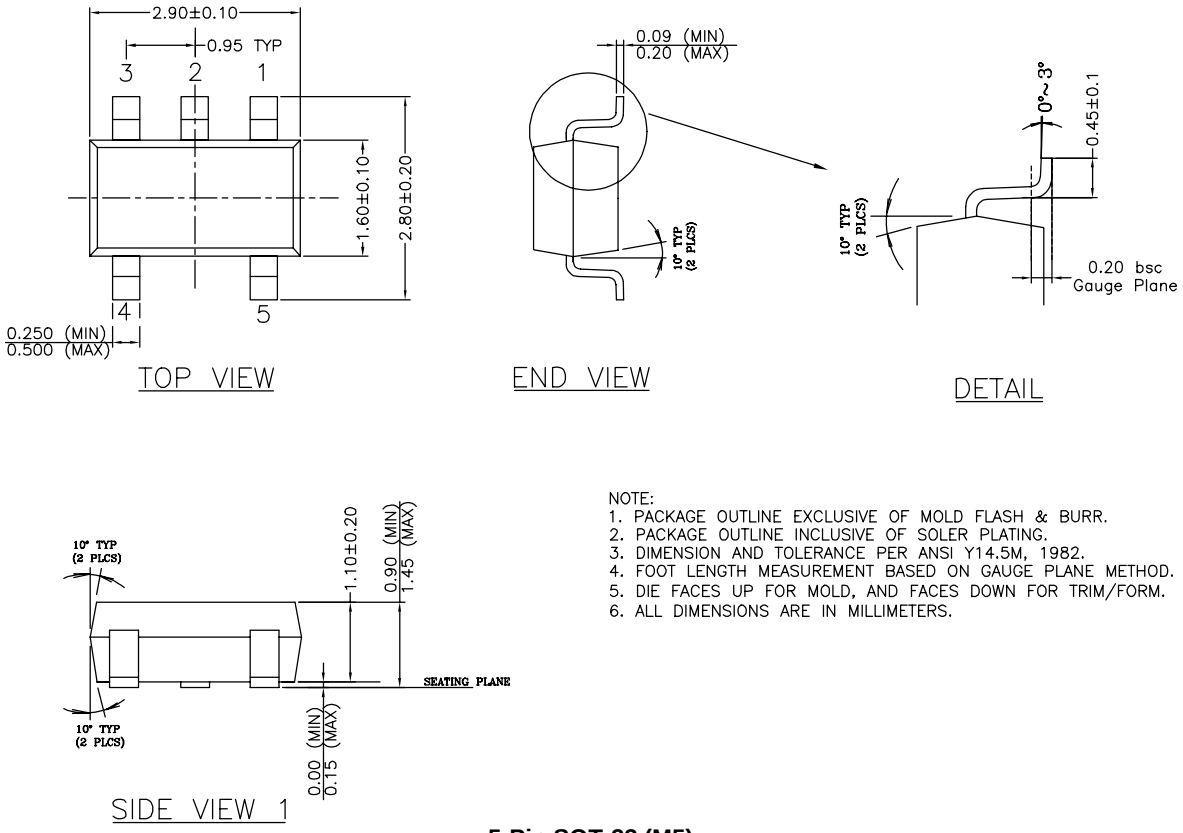

NOTE:
1. PACKAGE OUTLINE EXCLUSIVE OF MOLD FLASH & BURR.
2. PACKAGE OUTLINE INCLUSIVE OF SOLER PLATING.
3. DIMENSION AND TOLERANCE PER ANSI Y14.5M, 1982.
4. FOOT LENGTH MEASUREMENT BASED ON GAUGE PLANE METHOD.
5. DIE FACES UP FOR MOLD, AND FACES DOWN FOR TRIM/FORM.
6. ALL DIMENSIONS ARE IN MILLIMETERS.

5-Pin SOT-23 (M5)

MICREL, INC. 2180 FORTUNE DRIVE SAN JOSE, CA 95131 USA
TEL +1 (408) 944-0800 FAX +1 (408) 474-1000 WEB http:/www.micrel.com

The information furnished by Micrel in this data sheet is believed to be accurate and reliable. However, no responsibility is assumed by Micrel for its use. Micrel reserves the right to change circuitry and specifications at any time without notification to the customer.

Micrel Products are not designed or authorized for use as components in life support appliances, devices or systems where malfunction of a product can reasonably be expected to result in personal injury. Life support devices or systems are devices or systems that (a) are intended for surgical implant into the body or (b) support or sustain life, and whose failure to perform can be reasonably expected to result in a significant injury to the user. A Purchaser's use or sale of Micrel Products for use in life support appliances, devices or systems is a Purchaser's own risk and Purchaser agrees to fully indemnify Micrel for any damages resulting from such use or sale.

© 2002 Micrel, Incorporated.