MIC5021

High-Speed High-Side MOSFET Driver

General Description

The MIC5021 high-side MOSFET driver is designed to operate at frequencies up to 100kHz (5kHz PWM for 2% to 100% duty cycle) and is an ideal choice for high speed applications such as motor control, SMPS (switch mode power supplies), and applications using IGBTs. The MIC5021 can also operate as a circuit breaker with or without automatic retry.

A rising or falling edge on the input results in a current source pulse or sink pulse on the gate output. This output current pulse can turn on a 2000pF MOSFET in approximately 550ns. The MIC5021 then supplies a limited current (< 2mA), if necessary, to maintain the output state.

An overcurrent comparator with a trip voltage of 50mV makes the MIC5021 ideal for use with a current sensing MOSFET. An external low value resistor may be used instead of a sensing MOSFET for more precise overcurrent control. An optional external capacitor placed from the C_T pin to ground may be used to control the current shutdown duty cycle (dead time) from 20% to < 1%. A duty cycle from 20% to about 75% is possible with an optional pull-up resistor from C_T to V_{DD}.

The MIC5021 is available in 8-pin SOIC and plastic DIP packages.

Other members of the MIC502x family include the MIC5020 low-side driver and the MIC5022 half-bridge driver with a cross-conduction interlock.

Features

- 12V to 36V operation
- 550ns rise/fall time driving 2000pF
- TTL compatible input with internal pull-down resistor
- Overcurrent limit
- Gate to source protection
- Internal charge pump
- 100kHz operation guaranteed over full temperature and operating voltage range
- Compatible with current sensing MOSFETs
- Current source drive reduces EMI

Applications

- Lamp control
- Heater control
- Motor control
- Solenoid switching
- Switch-mode power supplies
- Circuit breaker

Ordering Information

Part Number		Temperature Range	Package
Standard	Pb-Free		
MIC5021BM	MIC5021YM	–40°C to +85°C	8-pin SOIC
MIC5021BN	MIC5021YN	–40°C to +85°C	8-pin Plastic DIP

Typical Application

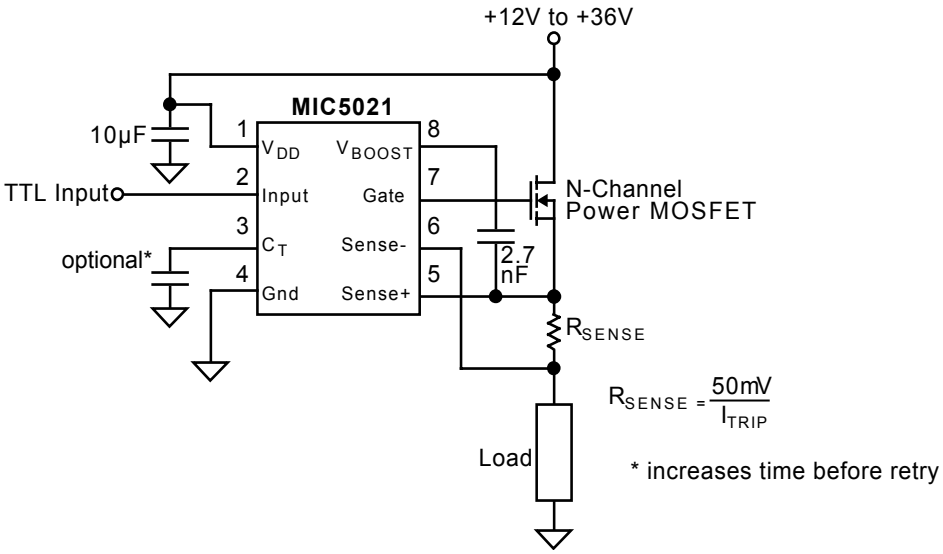

High-Side Driver with Overcurrent Trip and Retry

Pin Configuration

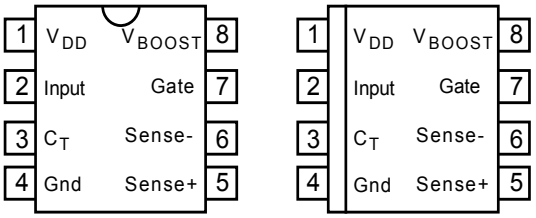

DIP Package (N) **SOIC Package (M)**

Block Diagram

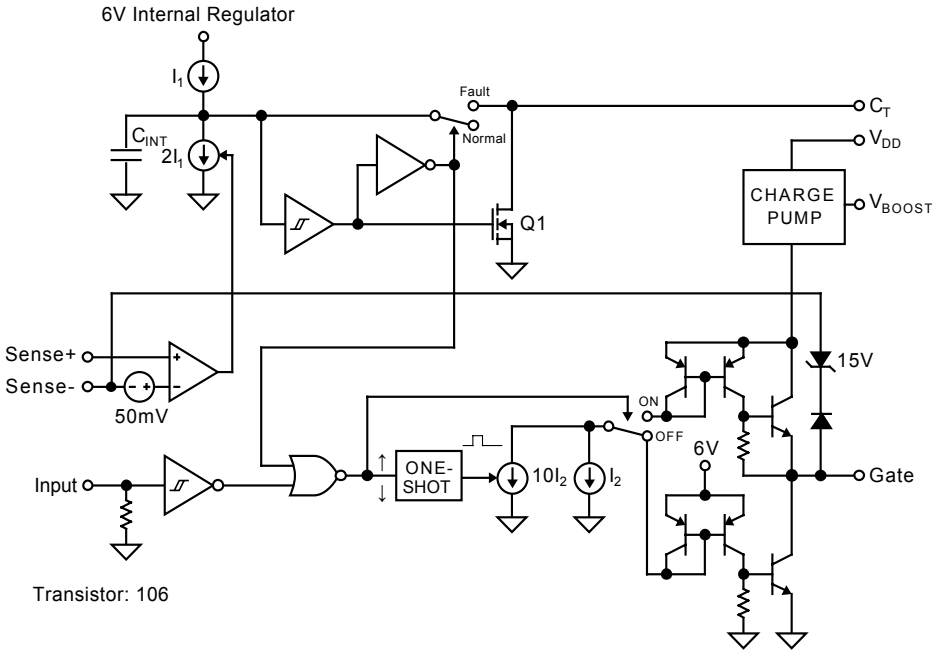

Pin Description

Pin Number	Pin Name	Pin Function
1	V_{DD}	Supply: +12V to +36V. Decouple with ≥ 10µF capacitor.
2	Input	TTL Compatible Input: Logic high turns the external MOSFET on. An internal pull-down returns an open pin to logic low.
3	C_T	Retry Timing Capacitor: Controls the off time ($t_{G(OFF)}$) of the overcurrent retry cycle. (Duty cycle adjustment.) • Open = approx. 20% duty cycle. • Capacitor to Ground = approx. 20% to < 1% duty cycle. • Pull-up resistor = approx. 20% to approx. 75% duty cycle. • Ground = maintained shutdown upon overcurrent condition.
4	Gnd	Circuit Ground
5	Sense +	Current Sense Comparator (+) Input: Connect to high side of sense resistor or current sensing MOSFET sense lead. A built-in offset in conjunction with R_{SENSE} sets the load overcurrent trip point.
6	Sense –	Current Sense Comparator (–) Input: Connect to the low side of the sense resistor (usually the high side of the load).
7	Gate	Gate Drive: Drives the gate of an external power MOSFET. Also limits V_{GS} to 15V max. to prevent Gate-to-Source damage. Will sink and source current.
8	V_{BOOST}	Charge Pump Boost Capacitor: A bootstrap capacitor from V_{BOOST} to the FET source pin supplies charge to quickly enhance the Gate output during turn-on.

Absolute Maximum Ratings

Supply Voltage (V_{DD}) ..... +40V
Input Voltage ..... –0.5V to +15V
Sense Differential Voltage ..... ±6.5V
Sense + or Sense – to Gnd ..... –0.5V to +36V
Timer Voltage (C_T) ..... +5.5V
V_{BOOST} Capacitor 0.01µF

Operating Ratings

Supply Voltage (V_{DD}) ..... +12V to +36V
Temperature Range
PDIP ..... –40°C to +85°C
SOIC ..... –40°C to +85°C

Electrical Characteristics

T_A = 25°C, Gnd = 0V, V_{DD} = 12V, C_T = Open, Gate C_L = 1500pF (IRF540 MOSFET) unless otherwise specified

Symbol	Parameter	Condition	Min	Typ	Max	Units
	D.C. Supply Current	V_{DD} = 12V, Input = 0V		1.8	4	mA
		V_{DD} = 36V, Input = 0V		2.5	6	mA
		V_{DD} = 12V, Input = 5V		1.7	4	mA
		V_{DD} = 36V, Input = 5V		2.5	6	mA
	Input Threshold		0.8	1.4	2.0	V
	Input Hysteresis			0.1		V
	Input Pull-Down Current	Input = 5V	10	20	40	µA
	Current Limit Threshold	**Note 1**	30	50	70	mV
	Gate On Voltage	V_{DD} = 12V **Note 2**	16	18	21	V
		V_{DD} = 36V **Note 2**	46	50	52	V
$t_{G(ON)}$	Gate On Time, Fixed	Sense Differential > 70mV	2	6	10	µs
$t_{G(OFF)}$	Gate Off Time, Adjustable	Sense Differential > 70mV, C_T = 0pF	10	20	50	µs
t_{DLH}	Gate Turn-On Delay	**Note 3**		500	1000	ns
t_R	Gate Rise Time	**Note 4**		400	500	ns
t_{DLH}	Gate Turn-Off Delay	**Note 5**		800	1500	ns
t_F	Gate Fall Time	**Note 6**		400	500	ns
f_{max}	Maximum Operating Frequency	**Note 7**	100	150		kHz

Note 1 When using sense MOSFETs, it is recommended that R_{SENSE} < 50Ω. Higher values may affect the sense MOSFET's current transfer ratio.

Note 2 DC measurement.

Note 3 Input switched from 0.8V (TTL low) to 2.0V (TTL high), time for Gate transition from 0V to 2V.

Note 4 Input switched from 0.8V (TTL low) to 2.0V (TTL high), time for Gate transition from 2V to 17V.

Note 5 Input switched from 2.0V (TTL high) to 0.8V (TTL low), time for Gate transition from 20V (Gate on voltage) to 17V.

Note 6 Input switched from 2.0V (TTL high) to 0.8V (TTL low), time for Gate transition from 17V to 2V.

Note 7 Frequency where gate on voltage reduces to 17V with 50% input duty cycle.

Typical Characteristics

Supply Current vs. Supply Voltage

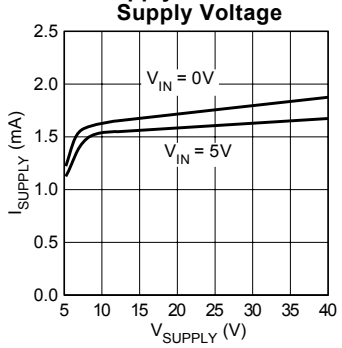

Gate Voltage Change vs. Supply Voltage

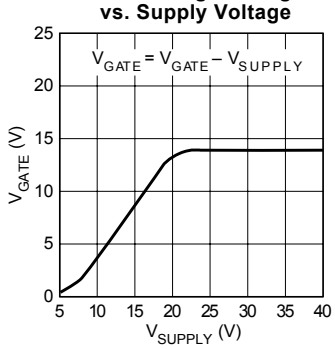

Gate Turn-On Dalay vs. Supply Voltage

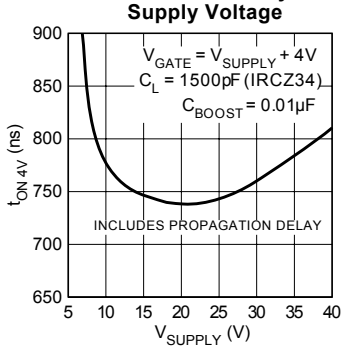

Gate Turn-On Delay vs. Supply Voltage

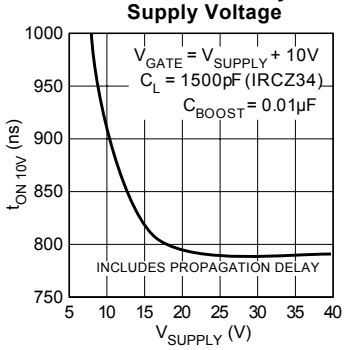

Gate Turn-On Delay vs. Gate Capacitance

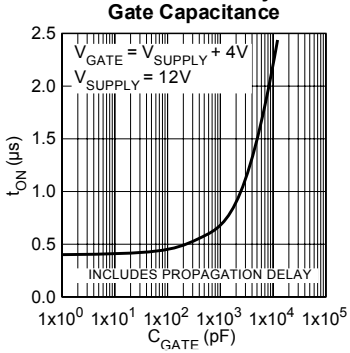

Gate Turn-Off Delay vs. Supply Voltage

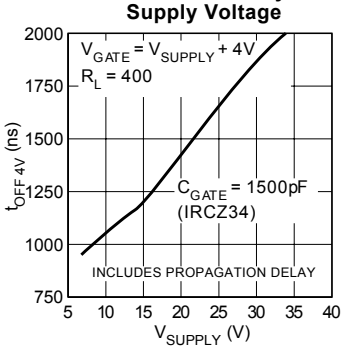

Overcurrent Retry Duty Cycle vs. Timing Capacitance

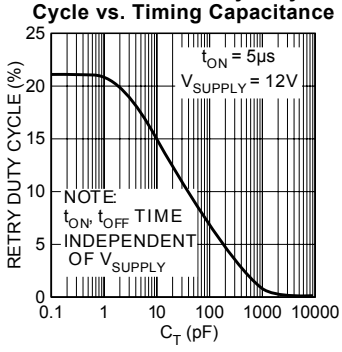

Input Current vs. Input Voltage

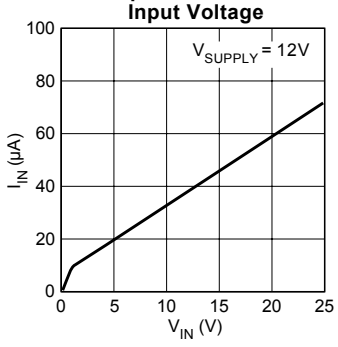

Sense Threshold vs. Temperature

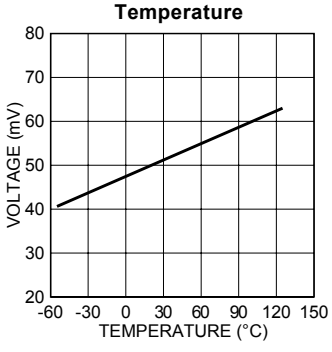

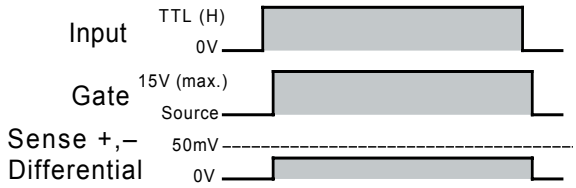

Timing Diagram 1. Normal Operation

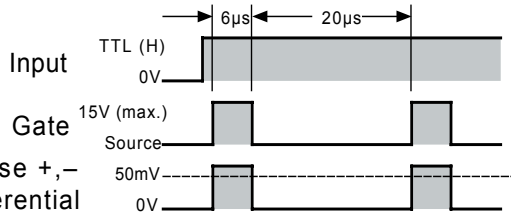

Timing Diagram 2. Fault Condition, C_T = Open

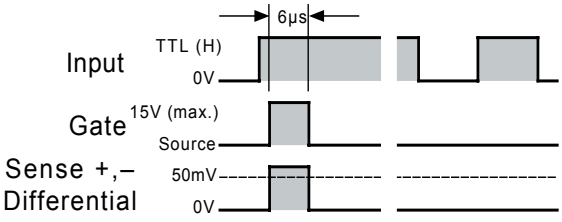

Timing Diagram 3. Fault Condition, C_T = Grounded

Functional Description

Refer to the MIC5021 block diagram.

Input

A signal greater than 1.4V (nominal) applied to the MIC5021 INPUT causes gate enhancement on an external MOSFET turning the MOSFET on.

An internal pull-down resistor insures that an open INPUT remains low, keeping the external MOSFET turned off.

Gate Output

Rapid rise and fall times on the GATE output are possible because each input state change triggers a one-shot which activates a high-value current sink ($10I_2$) for a short time. This draws a high current though a current mirror circuit causing the output transistors to quickly charge or discharge the external MOSFET's gate.

A second current sink continuously draws the lower value of current used to maintain the gate voltage for the selected state.

An internal charge pump utilizes an external "boost" capacitor connected between V_{BOOST} and the source of the external MOSFET. (Refer to typical application.) The boost capacitor stores charge when the MOSFET is off. As the MOSFET turns on, its source to ground voltage increases and is added to the voltage across the capacitor, raising the V_{BOOST} pin voltage. The boost capacitor charge is directed through the GATE pin to quickly charge the MOSFET's gate to 16V maximum above V_{DD}. The internal charge pump maintains the gate voltage.

An internal zener diode protects the external MOSFET by limiting the gate to source voltage.

Sense Inputs

The MIC5021's 50mV (nominal) trip voltage is created by internal current sources that force approximately 5µA out of SENSE + and approximately 15µA (at trip) out of SENSE –. When SENSE – is 50mV or more below SENSE +, SENSE – steals base current from an internal drive transistor shutting off the external MOSFET.

Overcurrent Limiting

Current source I_1 charges C_{INT} upon power up. An optional external capacitor connected to C_T is kept discharged through a MOSFET Q1.

A fault condition (> 50mV from SENSE + to SENSE –) causes the overcurrent comparator to enable current sink $2I_1$ which overcomes current source I_1 to discharge C_{INT} in a short time. When C_{INT} is discharged, the INPUT is disabled, which turns off the gate output, and C_{INT} and C_T are ready to be charged.

When the gate output turns the MOSFET off, the overcurrent signal is removed from the sense inputs which deactivates current sink $2I_1$. This allows C_{INT} and the optional capacitor connected to C_T to recharge. A Schmitt trigger delays the retry while the capacitor(s) recharge. Retry delay is increased by connecting a capacitor to C_T (optional).

The retry cycle will continue until the fault is removed or the input is changed to TTL low.

If C_T is connected to ground, the circuit will not retry upon a

Applications Information

The MIC5021 MOSFET driver is intended for high-side switching applications where overcurrent limiting and high speed are required. The MIC5021 can control MOSFETs that switch voltages up to 36V.

High-Side Switch Circuit Advantages

High-side switching allows more of the load related components and wiring to remain near ground potential when compared to low-side switching. This reduces the chances of short-to-ground accidents or failures.

Speed Advantage

The MIC5021 is about two orders of magnitude faster than the low cost MIC5014 making it suitable for high-frequency high-efficiency circuit operation in PWM (pulse width modulation) designs used for motor control, SMPS (switch mode power supply) and heating element control.

Switched loads (on/off) benefit from the MIC5021's fast switching times by allowing use of MOSFETs with smaller safe operating areas. (Larger MOSFETs are often required when using slower drivers.)

Supply Voltage

The MIC5021's supply input (V_{DD}) is rated up to 36V. The supply voltage must be equal to or greater than the voltage applied to the drain of the external N-channel MOSFET.

A 16V minimum supply is recommended to produce continuous on-state, gate drive voltage for standard MOSFETs (10V nominal gate enhancement).

When the driver is powered from a 12V to 16V supply, a logic-level MOSFET is recommended (5V nominal gate enhancement).

PWM operation may produce satisfactory gate enhancement at lower supply voltages. This occurs when fast switching repetition makes the boost capacitor a more significant voltage supply than the internal charge pump.

Logic-Level MOSFET Precautions

Logic-level MOSFETs have lower maximum gate-to-source voltage ratings (typically ±10V) than standard MOSFETs (typically ±20V). When an external MOSFET is turned on, the doubling effect of the boost capacitor can cause the gate-to-source voltage to momentarily exceed 10V. Internal zener diodes clamp this voltage to 16V maximum which is too high for logic-level MOSFETs. To protect logic-level MOSFETs, connect a zener diode ($5V \le V_{Zener} < 10V$) from gate to source.

Overcurrent Limiting

A 50mV comparator is provided for current sensing. The low level trip point minimizes I^2R losses when a power resistor is used for current sensing.

The adjustable retry feature can be used to handle loads with high initial currents, such as lamps or heating elements, and can be adjusted from the C_T connection.

C_T to ground maintains gate drive shutdown following an overcurrent condition.

C_T open, or a capacitor to ground, causes automatic retry. The default duty cycle (C_T open) is approximately 20%. Refer to the electrical characteristics when selecting a capacitor for reduced duty cycle.

C_T through a pull-up resistor to V_{DD} increases the duty cycle. *Increasing the duty cycle increases the power dissipation in the load and MOSFET under a "fault" condition.* Circuits may become unstable at a duty cycle of about 75% or higher, depending on conditions. *Caution: The MIC5021 may be damaged if the voltage applied to C_T exceeds the absolute maximum voltage rating.*

Boost Capacitor Selection

The boost capacitor value will vary depending on the supply voltage range.

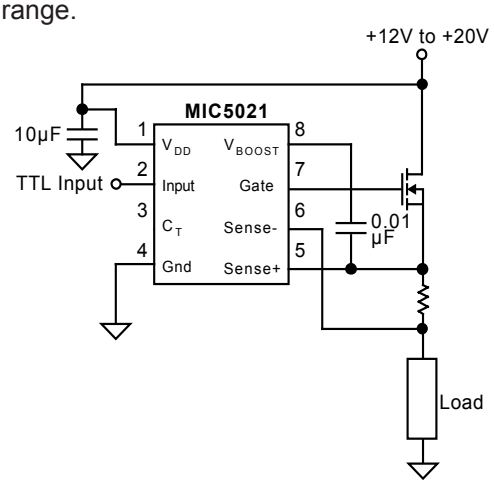

Figure 1. 12V to 20V Configuration

A 0.01µF boost capacitor is recommended for best performance in the 12V to 20V range. Refer to figure 1. Larger capacitors may damage the MIC5021.

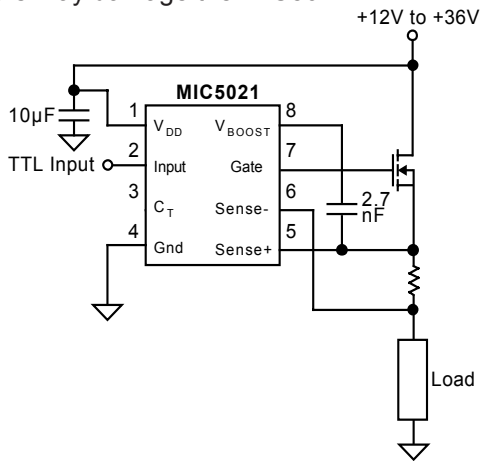

Figure 2. 12V to 36V Configuration

If the full 12V to 36V voltage range is required, the boost capacitor value must be reduced to 2.7nF. Refer to Figure 2. The recommended configuration for the 20V to 36V range is to place the capacitor is placed between V_{DD} and V_{BOOST} as shown in Figure 3.

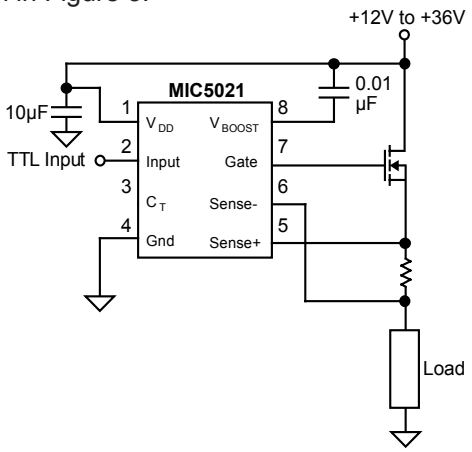

Figure 3. Preferred 20V to 36V Configuration

Do not use both boost capacitor between V_{BOOST} and the MOSFET source and V_{BOOST} and V_{DD} at the same time.

Current Sense Resistors

Lead length can be significant when using low value (< 1Ω) resistors for current sensing. Errors caused by lead length can be avoided by using four-teminal current sensing resistors. Four-terminal resistors are available from several manufacturers.

Circuits Without Current Sensing

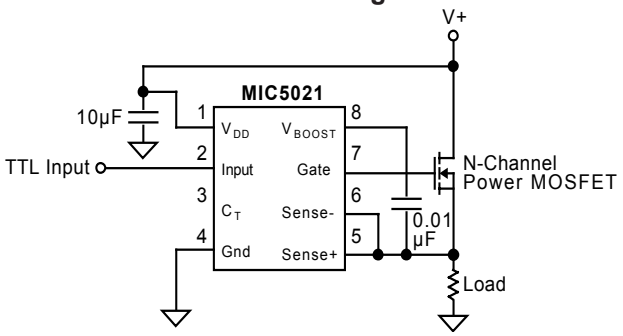

Figure 4a. Connecting Sense to Source

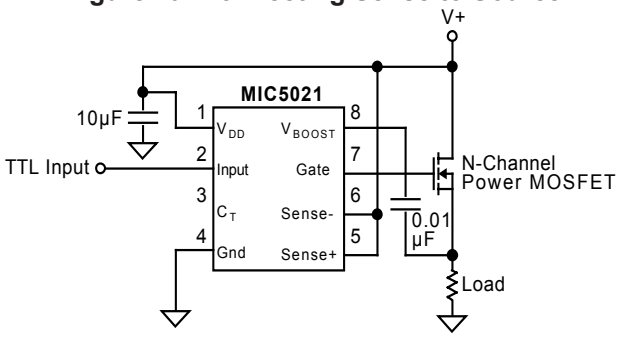

Figure 4b. Connecting Sense to Supply

Current sensing may be omitted by connecting the SENSE + and SENSE – pins to the source of the MOSFET or to the supply. Connecting the SENSE pins to the supply is preferred for inductive loads. Do not connect the SENSE pins to ground.

Inductive Load Precautions

Circuits controlling inductive loads, such as solenoids (Figure 5) and motors, require precautions when controlled by the MIC5021. Wire wound resistors, which are sometimes used to simulate other loads, can also show significant inductive properties.

An inductive load releases stored energy when its current flow is interrupted (when the MOSFET is switched off). The voltage across the inductor reverses and the inductor attempts to force current flow. Since the circuit appears open (the MOSFET appears as a very high resistance) a very large negative voltage occurs across the inductor.

Limiting Inductive Spikes

The voltage across the inductor can be limited by connecting a Schottky diode across the load. The diode is forward biased only when the load is switched off. The Schottky diode clamps negative transients to a few volts. This protects the MOSFET from drain-to-source breakdown and prevents the transient from damaging the charge pump by way of the boost capacitor. Also see *Sense Pin Considerations* below.

The diode should have a peak forward current rating greater than the load current. This is because the current through the diode is the same as the load current at the instant the MOSFET is turned off.

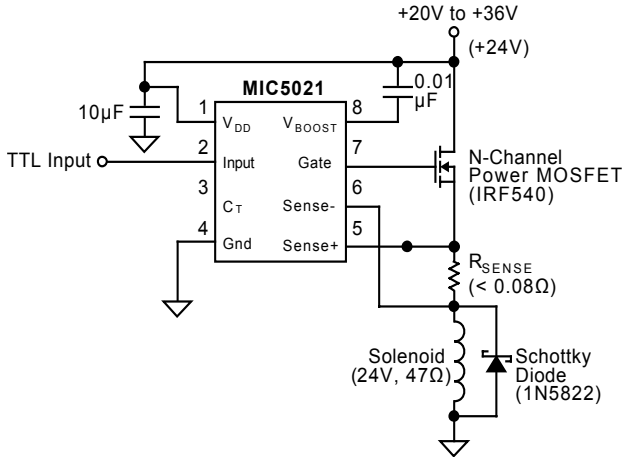

Figure 5. Solenoid Driver with Current Sensing

Sense Pin Considerations

The sense pins of the MIC5021 are sensitive to negative voltages. Forcing the sense pins much below –0.5V effectively reverses the supply voltage on portions of the driver resulting in unpredictable operation or damage.

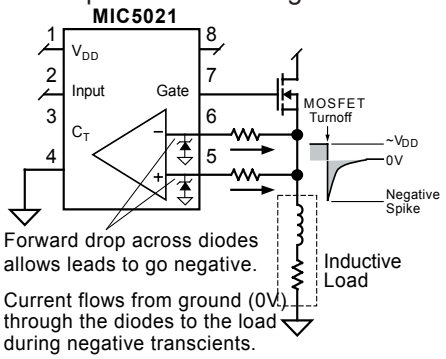

Figure 6. Inductive Load Turnoff

Figure 6 shows current flowing out of the sense leads of an MIC5021 during a negative transient (inductive kick). Internal Schottky diodes attempt to limit the negative transient by maintaining a low forward drop.

Although the internal Schottky diodes can protect the driver in low-current resistive applications, they are inadequate for inductive loads or the lead inductance in high-current resistive loads. Because of their small size, the diodes' forward voltage drop quickly exceeds 0.5V as current increases.

External Protection

Resistors placed in series with each SENSE connection limit the current drawn from the internal Schottky diodes during a negative transient. This minimizes the forward drop across the diodes.

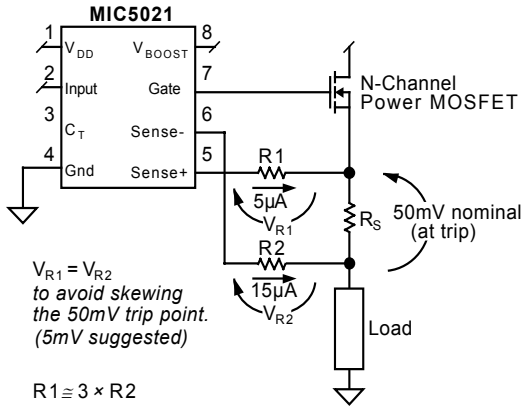

Figure 7. Resistor Voltage Drop

During normal operation, sensing current from the sense pins is unequal (5µA and 15µA). The internal Schottky diodes are reverse biased and have no effect. To avoid skewing the trip voltage, the current limiting resistors must drop equal voltages at the trip point currents. See Figure 7. To minimize resistor tolerance error, use a voltage drop lower than the trip voltage of 50mV. 5mV is suggested.

External Schottky diodes are also recommended. See D2 and D3 in Figure 8. The external diodes clamp negative transients better than the internal diodes because their larger size minimizes the forward voltage drop at higher currents.

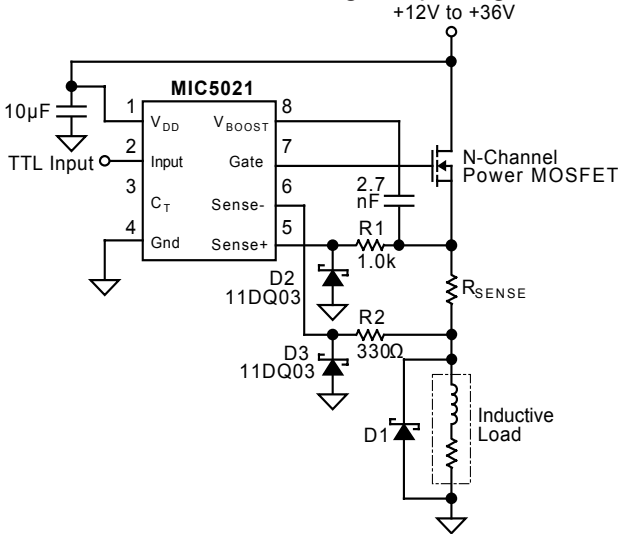

Figure 8. Protection from Inductive Kick

High-Side Sensing

Sensing the current on the high side of the MOSFET isolates the SENSE pins from the inductive spike.

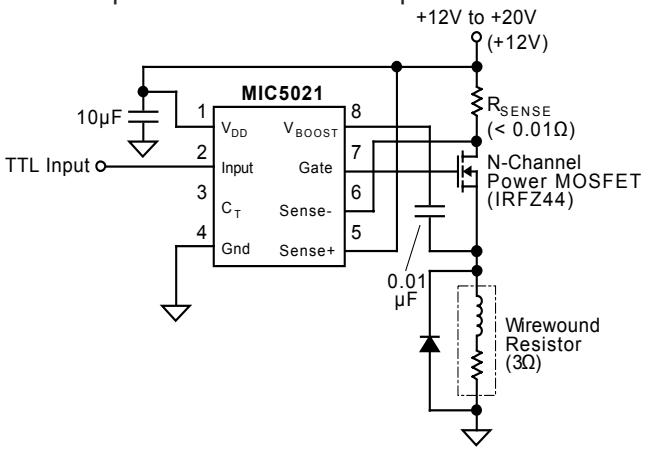

Figure 9. High Side Sensing

Lamp Driver Application

Incandescent lamps have a high inrush current (low resistance) when turned on. The MIC5021 can perform a "soft start" by pulsing the MOSFET (overcurrent condition) until the filament is warm and its current decreases (resistance increases). The sense resistor value is selected so the voltage drop across the sense resistor decreases below the sense threshold (50mV) as the filament becomes warm. The FET is no longer pulsed and the lamp turns completely on.

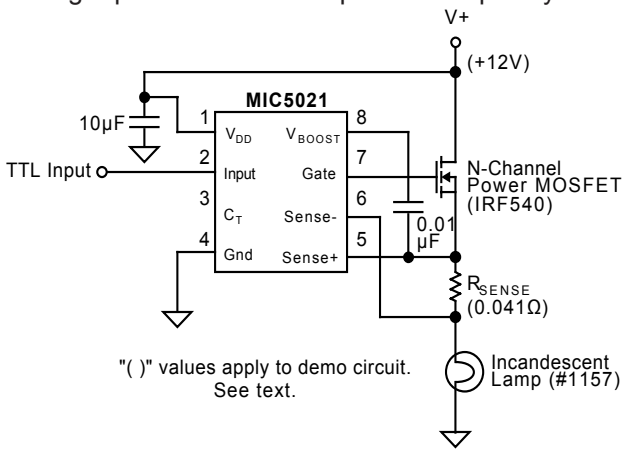

Figure 10. Lamp Driver with Current Sensing

A lamp may not fully turn on if the filament does not heat up adequately. Changing the duty cycle, sense resistor, or both to match the filament characteristics can correct the problem.

Soft start can be demonstrated using a #1157 dual filament automotive lamp. The value of R_S shown in Figure 10 allows for soft start of the higher-resistance filament (measures approx. 2.1Ω cold or 21Ω hot).

Remote Overcurrent Limiting Reset

In circuit breaker applications where the MIC5021 maintains an off condition after an overcurrent condition is sensed, the C_T pin can be used to reset the MIC5021.

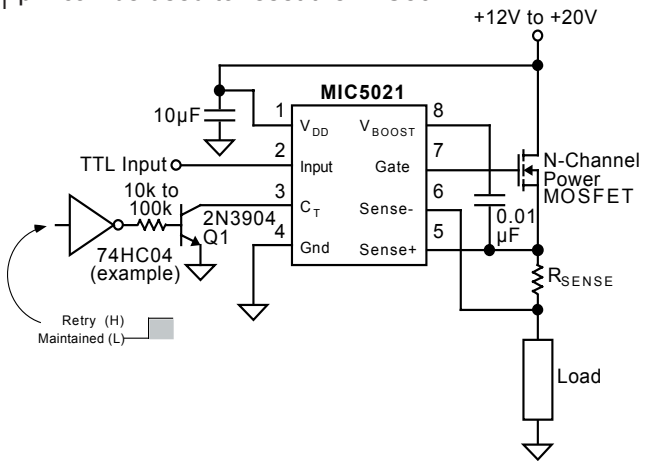

Figure 11. Remote Control Circuit

Switching Q1 on pulls C_T low which keeps the MIC5021 GATE output off when an overcurrent is sensed. Switching Q1 off causes C_T to appear open. The MIC5021 retries in about 20µs and continues to retry until the overcurrent condition is removed.

For demonstration purposes, a 680Ω load resistor and 3Ω sense resistor will produce an overcurrent condition when the load's supply (V+) is approximately 12V or greater.

Low-Temperature Operation

As the temperature of the MIC5021AJB (extended temperature range version—no longer available) approaches –55°C, the driver's off-state, gate-output offset from ground increases. If the operating environment of the MIC5021AJB includes low temperatures (–40°C to –55°C), add an external 2.2MΩ resistor as shown in Figures 12a or 12b. This assures that the driver's gate-to-source voltage is far below the external MOSFET's gate threshold voltage, forcing the MOSFET fully off.

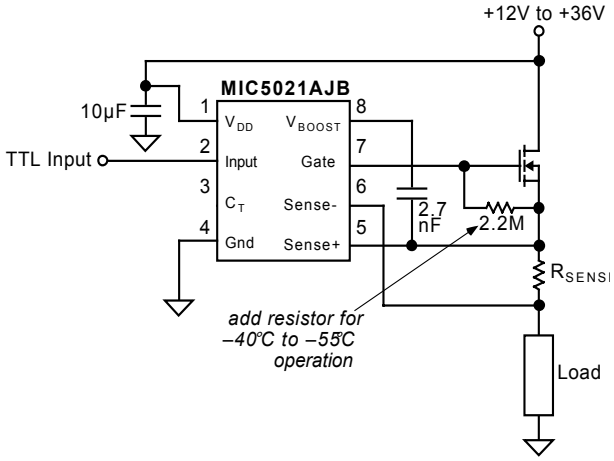

Figure 12a. Gate-to-Source Pull Down

The gate-to-source configuration (refer to Figure 12a) is appropriate for resistive and inductive loads. This also causes the smallest decrease in gate output voltage.

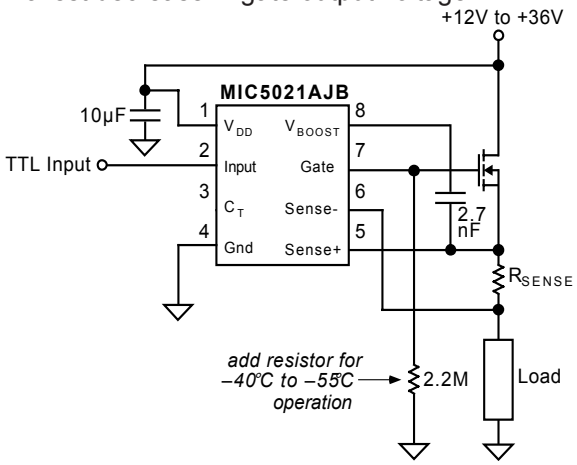

Figure 12b. Gate-to-Ground Pull Down

The gate-to-ground configuration (refer to Figure 12b) is appropriate for resistive, inductive, or capacitive loads. This configuration will decrease the gate output voltage slightly more than the circuit shown in Figure 12a.

Package Information

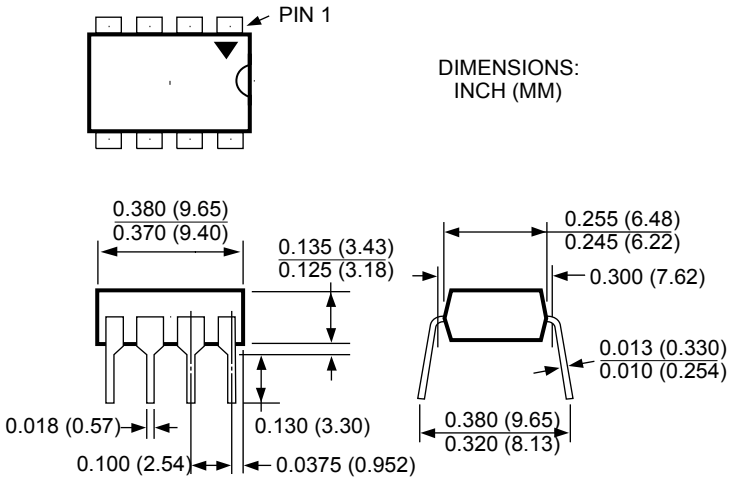

8-Pin Plastic DIP (N)

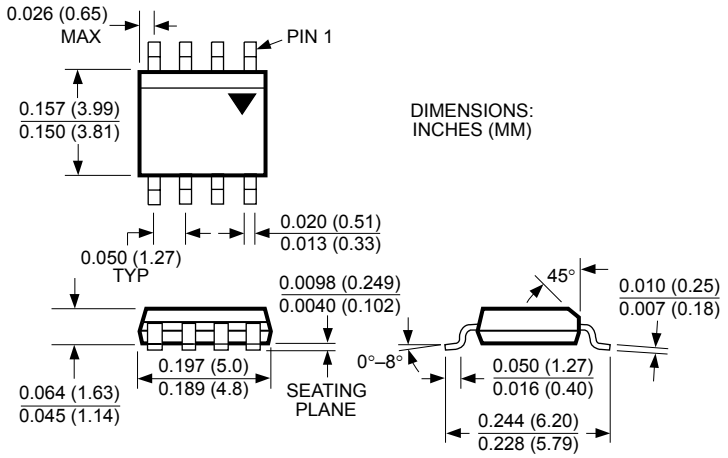

8-Pin SOIC (M)

MICREL INC. 2180 FORTUNE DRIVE SAN JOSE, CA 95131 USA
TEL + 1 (408) 944-0800 FAX + 1 (408) 474-1000 WEB http://www.micrel.com

This information furnished by Micrel in this data sheet is believed to be accurate and reliable. However no responsibility is assumed by Micrel for its use. Micrel reserves the right to change circuitry and specifications at any time without notification to the customer.

Micrel Products are not designed or authorized for use as components in life support appliances, devices or systems where malfunction of a product can reasonably be expected to result in personal injury. Life support devices or systems are devices or systems that (a) are intended for surgical implant into the body or (b) support or sustain life, and whose failure to perform can be reasonably expected to result in a significant injury to the user. A Purchaser's use or sale of Micrel Products for use in life support appliances, devices or systems is a Purchaser's own risk and Purchaser agrees to fully indemnify Micrel for any damages resulting from such use or sale.

© 2003 Micrel, Inc.