MIC38C42/3/4/5

BiCMOS Current-Mode PWM Controllers

General Description

The MIC38C4x are fixed frequency, high performance, current-mode PWM controllers. Micrel's BiCMOS devices are pin compatible with 384x bipolar devices but feature several improvements.

Undervoltage lockout circuitry allows the '42 and '44 versions to start up at 14.5V and operate down to 9V, and the '43 and '45 versions start at 8.4V with operation down to 7.6V. All versions operate up to 20V.

When compared to bipolar 384x devices operating from a 15V supply, start-up current has been reduced to 50µA typical and operating current has been reduced to 4.0 mA typical. Decreased output rise and fall times drive larger MOSFETs, and rail-to-rail output capability increases efficiency, especially at lower supply voltages. The MIC38C4x also features a trimmed oscillator discharge current and bandgap reference.

The MIC38C4x denotes 8-pin plastic DIP, SOIC, and MSOP packages. MIC384Cx-1 denotes 14-pin plastic DIP and SOIC packages. 8-pin devices feature small size, while 14-pin devices separate the analog and power connections for improved perfomance and power dissipation.

For fast rise and fall times and higher output drive, refer to the MIC38HC4x.

Features

- Fast 40ns output rise and 30ns output fall times
- –40°C to +85°C temperature range meets UC284x specifications
- High-performance, low-power BiCMOS Process
- Ultralow start-up current (50µA typical)
- Low operating current (4mA typical)
- CMOS outputs with rail-to-rail swing
- ≥ 500kHz current-mode operation
- Trimmed 5V bandgap reference
- Pin-for-pin compatible with UC3842/3843/3844/3845(A)
- Trimmed oscillator discharge current
- UVLO with hysteresis
- Low cross-conduction currents

Applications

- Current-mode, off-line, switched-mode power supplies
- Current-mode, dc-to-dc converters.
- Step-down "buck" regulators
- Step-up "boost" regulators
- Flyback, isolated regulators
- Forward converters
- Synchronous FET converters

Functional Diagram

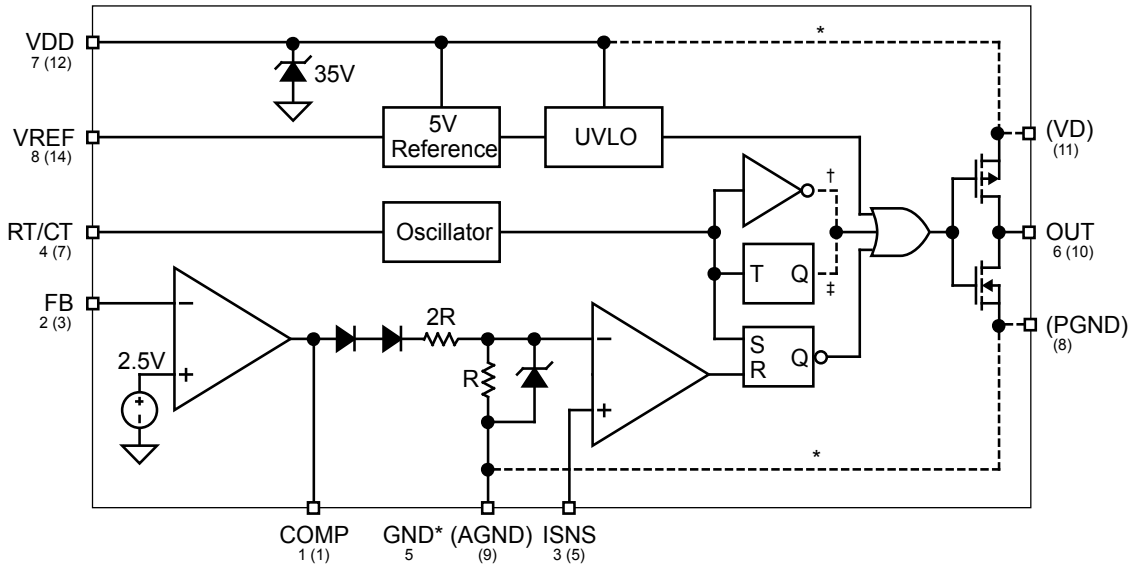

( ) pins are on MIC38C4x-1 (14-lead) versions only
* MIC38C4x, (8-lead) versions only
† MIC38C42, MIC38C43 (96% max. duty cycle) versions only
‡ MIC38C44, MIC38C45 (50% max. duty cycle) versions only

Micrel, Inc. • 2180 Fortune Drive • San Jose, CA 95131 • USA • tel + 1 (408) 944-0800 • fax + 1 (408) 474-1000 • http://www.micrel.com

Ordering Information

Part Number*		Temperature Range	Package
Standard	**Pb-Free**		
MIC38C42BN	MIC38C42YN	-40°C to +85°C	8-pin Plastic DIP
MIC38C43BN	MIC38C43YN	-40°C to +85°C	8-pin Plastic DIP
MIC38C44BN	MIC38C44YN	-40°C to +85°C	8-pin Plastic DIP
MIC38C45BN	MIC38C45YN	-40°C to +85°C	8-pin Plastic DIP
MIC38C42-1BN	Contact Factory	-40°C to +85°C	14-pin Plastic DIP
MIC38C43-1BN	Contact Factory	-40°C to +85°C	14-pin Plastic DIP
MIC38C44-1BN	MIC38C44-1YN	-40°C to +85°C	14-pin Plastic DIP
MIC38C45-1BN	Contact Factory	-40°C to +85°C	14-pin Plastic DIP
MIC38C42BM	MIC38C42YM	-40°C to +85°C	8-pin SOIC
MIC38C43BM	MIC38C43YM	-40°C to +85°C	8-pin SOIC
MIC38C44BM	MIC38C44YM	-40°C to +85°C	8-pin SOIC
MIC38C45BM	MIC38C45YM	-40°C to +85°C	8-pin SOIC
MIC38C42BMM	MIC38C42YMM	-40°C to +85°C	8-pin MSOP
MIC38C43BMM	MIC38C43YMM	-40°C to +85°C	8-pin MSOP
MIC38C44BMM	MIC38C44YMM	-40°C to +85°C	8-pin MSOP
MIC38C45BMM	MIC38C45YMM	-40°C to +85°C	8-pin MSOP
MIC38C42-1BM	MIC38C42-1YM	-40°C to +85°C	14-pin SOIC
MIC38C43-1BM	MIC38C43-1YM	-40°C to +85°C	14-pin SOIC
MIC38C44-1BM	MIC38C44-1YM	-40°C to +85°C	14-pin SOIC
MIC38C45-1BM	MIC38C45-1YM	-40°C to +85°C	14-pin SOIC

* Refer to the Part Number Cross Reference for a listing of Micrel devices equivalent to UC284x and UC384x devices.

Selection Guide

	UVLO Thresholds	
Duty Cycle	Startup 8.4V Minimum Operating 7.6V	Startup 14.5V Minimum Operating 9V
0% to 96%	MIC38C43	MIC38C42
0% to 50%	MIC38C45	MIC38C44

Pin Configuration

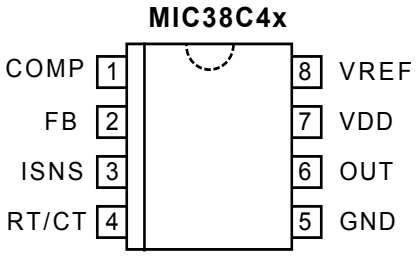

8-Pin DIP (N)
8-Pin SOIC (M)
8-Pin MSOP (MM)

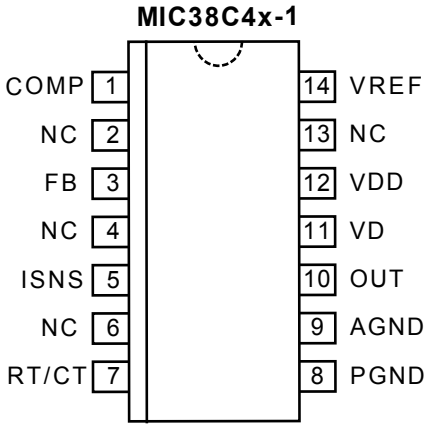

14-Pin DIP (-1BN)
14-Pin SOIC (-1BM)

Pin Description

Pin Number N, M, MM	Pin Number -1BN, -1BM	Pin Name	Pin Function
1	1	COMP	Compensation: Connect external compensation network to modify the error amplifier output.
	2	NC	Not internally connected.
2	3	FB	Feedback (Input): Error amplifier input. Feedback is 2.5V at desired output voltage.
	4	NC	Not internally connected.
3	5	ISNS	Current Sense (Input): Current sense comparator input. Connect to current sensing resistor or current transformer.
	6	NC	Not internally connected.
4	7	RT/CT	Timing Resistor/Timing Capacitor: Connect external RC network to select switching frequency.
5		GND	Ground: Combined analog and power ground.
	8	PGND	Power Ground: N-channel driver transistor ground.
	9	AGND	Analog Ground: Controller circuitry ground.
6	10	OUT	Power Output: Totem-pole output.
	11	VD	Power Supply (Input): P-channel driver transistor supply input. Return to power ground (PGND).
7	12	VDD	Analog Supply (Input): Controller circuitry supply input. Return to analog ground (AGND).
	13	NC	Not internally connected.
8	14	VREF	5V Reference (Output): Connect external RC network.

Absolute Maximum Ratings

Zener Current (V_{DD}) 30mA

Operation at ≥18V may require special precautions (Note 6).

Supply Voltage (V_{DD}), **Note 6** 20V
Switch Supply Voltage (V_D) 20V
Current Sense Voltage (V_{ISNS}) ..... –0.3V to 5.5V
Feedback Voltage (V_{FB}) ..... –0.3V to 5.5V
Output Current, 38C42/3/4/5 (I_{OUT}) 0.5A
Storage Temperature (T_A) ..... –65°C to +150°C

Operating Ratings

Junction Temperature (T_J) ..... 150°C

Package Thermal Resistance
8-Pin Plastic DIP (θ_{JA}) ..... 125°C/W
8-Pin MSOP (θ_{JA}) ..... 250°C/W
8-Pin SOIC (θ_{JA}) ..... 170°C/W
14-Pin Plastic DIP (θ_{JA}) ..... 90°C/W
14-Pin SOIC (θ_{JA}) ..... 145°C/W

Electrical Characteristics

V_{DD} = 15V, **Note 4**; R_T = 11.0k; C_T = 3.3nF; –40°C ≤ T_A ≤ 85°C; unless noted

Parameter	Test Conditions	Min	Typ	Max	Units
Reference Section					
Output Voltage	T_A = 25°C, I_O = 1mA	4.90	5.00	5.10	V
Line Regulation	12V ≤ V_{DD} ≤ 18V, I_O = 5µA, **Note 6**		2	20	mV
Load Regulation	1 ≤ I_O ≤ 20mA		1	25	mV
Temp. Stability	**Note 1**		0.2		mV/°C
Total Output Variation	Line, Load, Temp., **Note 1**	4.82		5.18	V
Output Noise Voltage	10Hz ≤ f ≤ 10kHz, T_A = 25°C, **Note 1**		50		µV
Long Term Stability	T_A = 125°C, 1000 hrs., **Note 1**		5	25	mV
Output Short Circuit		–30	–80	–180	mA
Oscillator Section					
Initial Accuracy	T_A = 25°C, **Note 5**	49	52	55	kHz
Voltage Stability	12 ≤ V_{DD} ≤ 18V, **Note 6**		0.2	1.0	%
Temp. Stability	T_{MIN} ≤ T_A ≤ T_{MAX}, **Note 1**		0.04		%/°C
Clock Ramp	T_A = 25°C, $V_{RT/CT}$ = 2V	7.7	8.4	9.0	mA
Reset Current	T_A = T_{MIN} to T_{MAX}	7.2	8.4	9.5	mA
Amplitude	$V_{RT/CT}$ peak to peak		1.9		Vp-p
Error Amp Section					
Input Voltage	V_{COMP} = 2.5V	2.42	2.50	2.58	V
Input Bias Current	V_{FB} = 5.0V		–0.1	–2	µA
A_{VOL}	2 ≤ V_O ≤ 4V	65	90		dB
Unity Gain Bandwidth	**Note 1**	0.7	1.0		MHz
PSRR	12 ≤ V_{DD} ≤ 18V	60			dB
Output Sink Current	V_{FB} = 2.7V, V_{COMP} = 1.1V	2	14		mA
Output Source Current	V_{FB} = 2.3V, V_{COMP} = 5V	–0.5	–1		mA
V_{OUT} High	V_{FB} = 2.3V, R_L = 15k to ground	5	6.8		V
V_{OUT} Low	V_{FB} = 2.7V, R_L = 15k to V_{REF}		0.1	1.1	V

Parameter	Test Conditions	Min	Typ	Max	Units
Current Sense					
Gain	**Notes 2, 3**	2.85	3.0	3.15	V/V
MaximumThreshold	V_{COMP} = 5V, **Note 2**	0.9	1	1.1	V
PSRR	12 ≤ V_{DD} ≤ 18V, **Note 2**		70		dB
Input Bias Current			–0.1	–2	µA
Delay to Output			120	250	ns
Output					
$R_{DS(ON)}$ High $R_{DS(ON)}$ Low	I_{SOURCE} = 200mA I_{SINK} = 200mA		20 11		Ω Ω
Rise Time	T_A = 25°C, C_L = 1nF		40	80	ns
Fall Time	T_A = 25°C, C_L = 1nF		30	60	ns
Undervoltage Lockout					
Start Threshold	MIC38C42/4	13.5	14.5	15.5	V
	MIC38C43/5	7.8	8.4	9.0	V
Minimum Operating Voltage	MIC38C42/4	8	9	10	V
	MIC38C43/5	7.0	7.6	8.2	V
Pulse Width Modulator					
Maximum Duty Cycle	MIC38C42/3	94	96		%
	MIC38C44/5	46	50		%
Minimum Duty Cycle				0	%
Total Standby Current					
Start-Up Current	V_{DD} = 13V for MIC38C42/44 V_{DD} = 7.5V for MIC38C43/45		50	200	µA
Operating Supply Current	V_{FB} = V_{ISNS} = 0V		4.0	6.0	mA
Zener Voltage (V_{DD})	I_{DD} = 25mA, **Note 6**	30	37		V

Note 1: These parameters, although guaranteed, are not 100% tested in production.

Note 2: Parameter measured at trip point of latch with V_{EA} = 0.

Note 3: Gain defined as:

$$A = \frac{\Delta V_{PIN1}}{V_{TH}\,(I_{SNS})};\ 0 \le V_{TH}\,(I_{SNS}) \le 0.8V$$

Note 4: Adjust V_{DD} above the start threshold before setting at 15V.

Note 5: Output frequency equals oscillator frequency for the MIC38C42 and MIC38C43. Output frequency for the MIC38C44, and MIC38C45 equals one half the oscillator frequency.

Note 6: On 8-pin version, 20V is maximum input on pin 7, as this is also the supply pin for the output stage. On 14-pin version, 40V is maximum for pin 12 and 20V maximum for pin 11.

Typical Characteristics

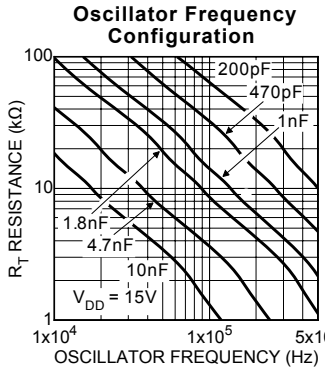

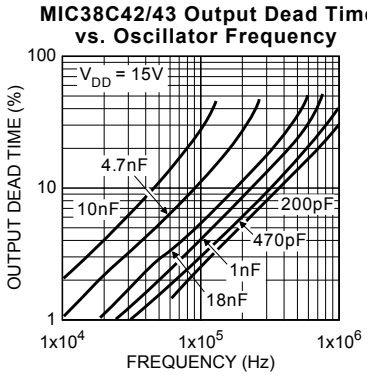

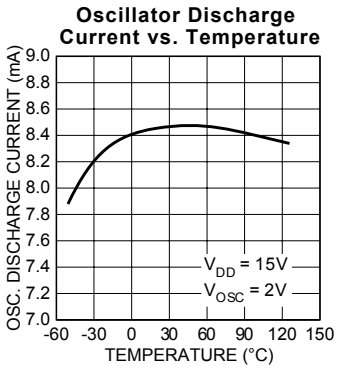

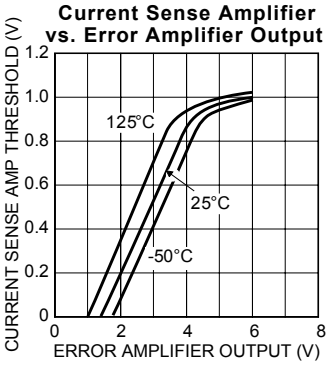

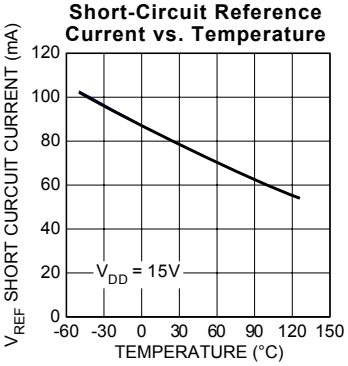

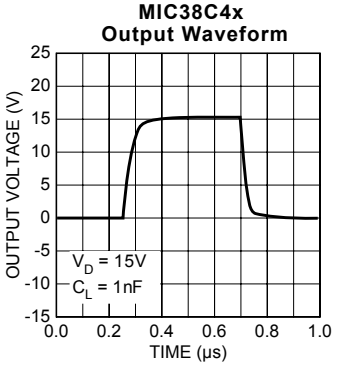

Application Information

Familiarity with 384x converter designs is assumed.

The MIC38C4x has been designed to be compatible with 384xA series controllers.

MIC38C4x Advantages

Start-up Current

Start-up current has been reduced to an ultra-low 50µA (typical) permitting higher-valued, lower-wattage, start-up resistors (powers controller during power supply start-up). The reduced resistor wattage reduces cost and printed circuit space.

Operating Current

Operating current has been reduced to 4mA compared to 11mA for a typical bipolar controller. The controller runs cooler and the V_{DD} hold-up capacitance required during start-up may be reduced.

Output Driver

Complementary internal P- and N-channel MOSFETs produce rail-to-rail output voltages for better performance driving external power MOSFETs. The driver transistor's low on-resistance and high peak current capability can drive gate capacitances of greater than 1000pF. The value of output capacitance which can be driven is determined only by the rise/fall time requirements. Within the restrictions of output capacity and controller power dissipation, maximum switching frequency can approach 500kHz.

Design Precautions

When operating near 20V, circuit transients can easily exceed the 20V absolute maximum rating, permanently damaging the controller's CMOS construction. To reduce transients, use a 0.1µF low-ESR capacitor to next to the controller's supply V_{DD} (or V_D for '-1' versions) and ground connections. Film type capacitors, such as Wima MKS2, are recommended.

When designing high-frequency converters, avoid capacitive and inductive coupling of the switching waveform into high-impedance circuitry such as the error amplifier, oscillator, and current sense amplifier. Avoid long printed-circuit traces and component leads. Locate oscillator and compensation circuitry near the IC. Use high frequency decoupling capacitors on V_{REF}, and if necessary, on V_{DD}. Return high *di*/*dt* currents directly to their source and use large area ground planes.

Buck Converter

Refer to figure 1. When at least 26V is applied to the input, C5 is charged through R2 until the voltage V_{DD} is greater than 14.5V (the undervoltage lockout value of the MIC38C42). Output switching begins when Q1 is turned on by the gate drive transformer T1, charging the output filter capacitor C3 through L1. D5 supplies a regulated +12V to V_{DD} once the circuit is running.

Current sense transformer CT1 provides current feedback to ISNS for current-mode operation and cycle-by-cycle current limiting. This is more efficient than a high-power sense resistor and provides the required ground-referenced level shift.

When Q1 turns off, current flow continues from ground through D1 and L1 until Q1 is turned on again.

The 100V Schottky diode D1 reduces the forward voltage drop in the main current path, resulting in higher efficiency than could be accomplished using an ultra-fast-recovery diode. R1 and C2 suppress parasitic oscillations from D1.

Using a high-value inductance for L1 and a low-ESR capacitor for C3 permits small capacitance with minimum output ripple. This inductance value also improves circuit efficiency by reducing the flux swing in L1.

Magnetic components are carefully chosen for minimal loss at 500kHz. CT1 and T1 are wound on Magnetics, Inc. P-type material toroids. L1 is wound on a Siemens N49 EFD core.

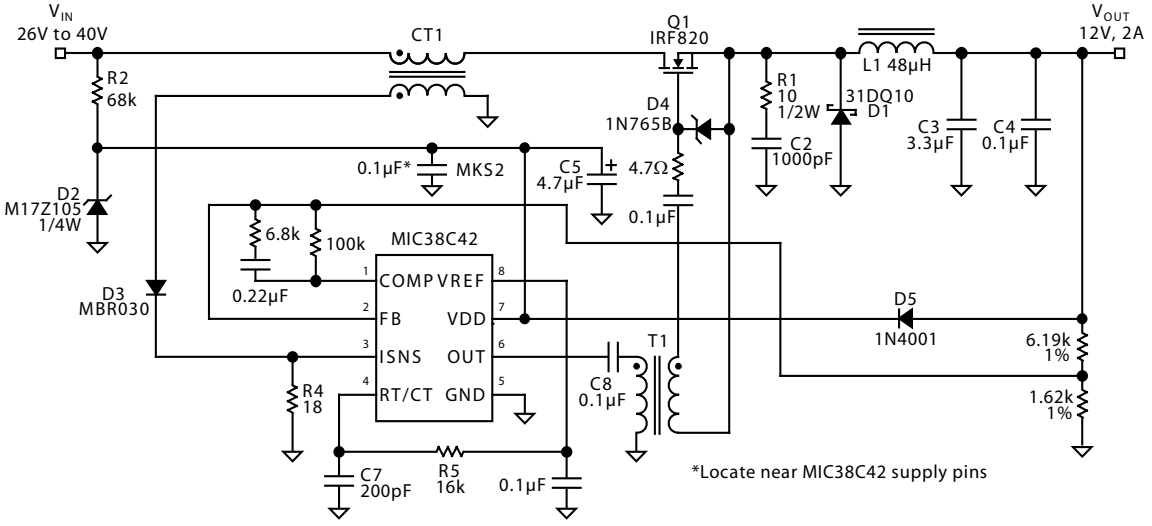

Figure 1. 500kHz, 25W, Buck Converter

Test	Conditions	Results
Line Regulation	V_{IN} = 26V to 80V, I_O = 2A	0.5%
Load Regulation	V_{IN} = 48V, I_O = 0.2A to 2A	0.6%
Efficiency	V_{IN} = 48V, I_O = 2A	90%
Output Ripple	V_{IN} = 48V, I_O = 2A (20MHz BW)	100mV

Symbol	Custom Coil[1]	ETS[2]
CT1	4923	ETS 92420
T1	4924	ETS 92419
L1	4925	ETS 92421

1. Custom Coils, Alcester, SD tel: (605) 934-2460
2. Energy Transformation Systems, Inc. tel: (415) 324-4949.

Synchronous Buck Converter

Refer to figure 2. This MIC38C43 synchronous buck converter uses an MIC5022 half-bridge driver to alternately drive the PWM switch MOSFET (driven by GATEH, or high-side output) and a MOSFET which functions as a synchronous rectifier (driven by the GATEL, or low-side output).

The low-side MOSFET turns on when the high-side MOSFET is off, allowing current to return from ground. Current flows through the low-side MOSFET in the source to drain direction.

The on-state voltage drop of the low-side MOSFET is lower than the forward voltage drop of an equivalent Schottky rectifier. This lower voltage drop results in higher efficiency.

A sense resistor (5mΩ) is connected to the driver's high-side current sense inputs to provide overcurrent protection. Refer to the MIC5020, MIC5021, and MIC5022 data sheets for more information.

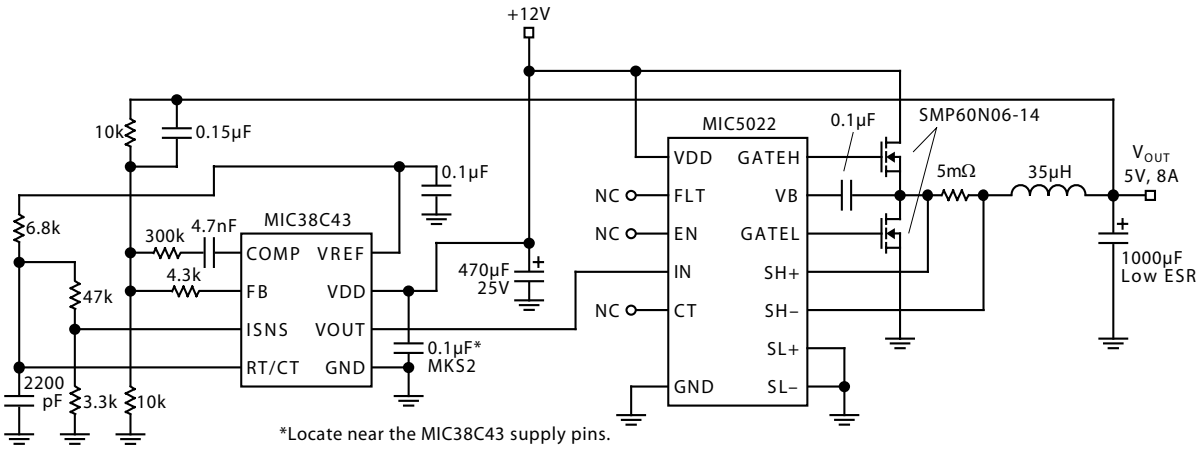

Figure 2. 100kHz, Synchronous Buck Converter

Package Information

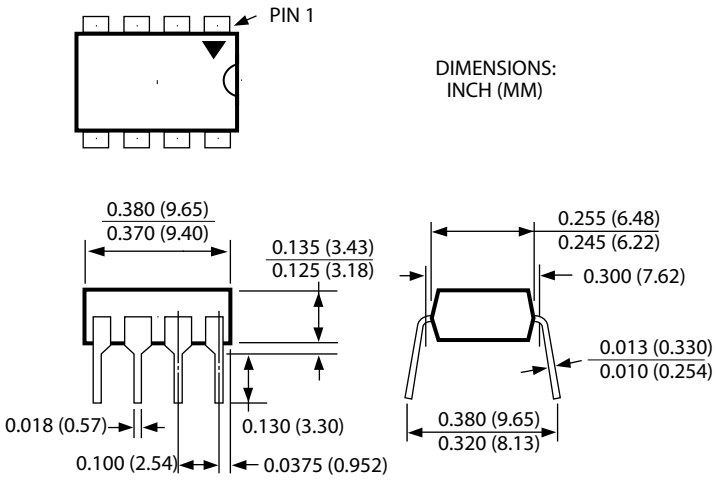

8-Pin Plastic DIP (N)

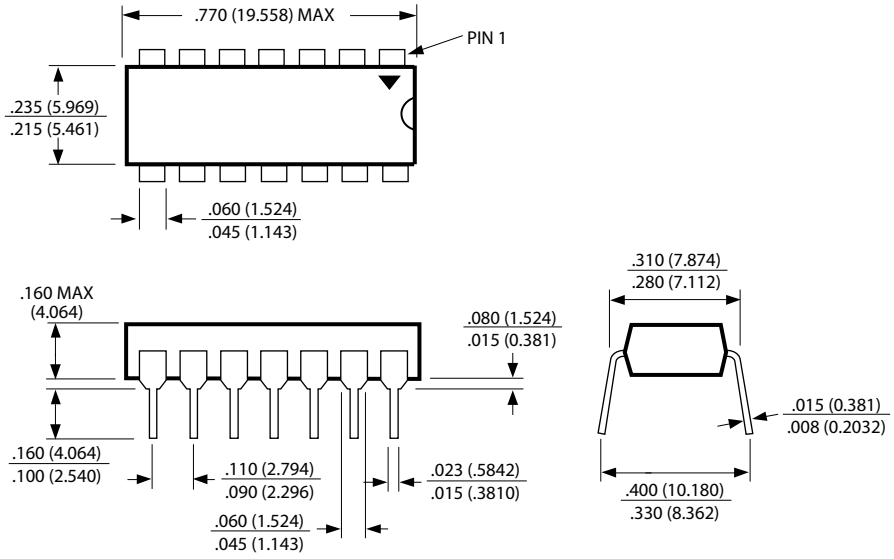

14-Pin Plastic DIP (N)

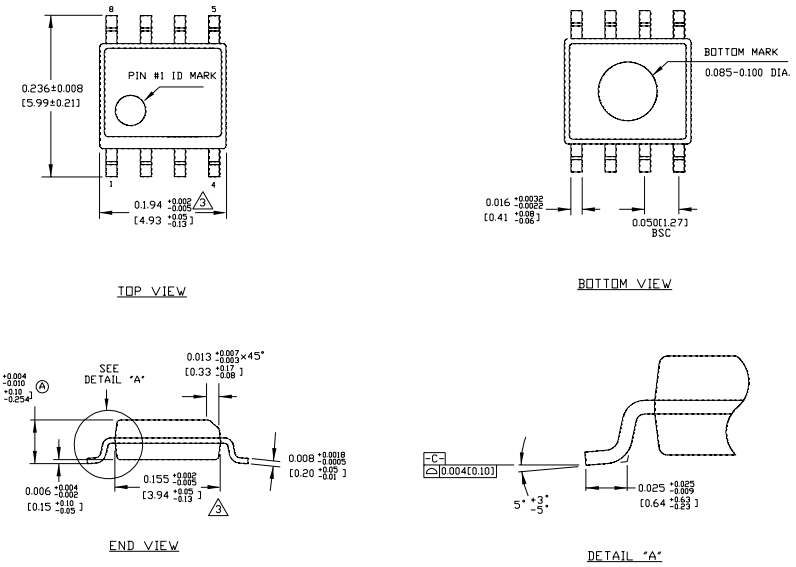

NOTES:
1. DIMENSIONS ARE IN INCHES[MM].
2. CONTROLLING DIMENSION: INCHES.
3. DIMENSION DOES NOT INCLUDE MOLD FLASH OR PROTRUSIONS, EITHER OF WHICH SHALL NOT EXCEED 0.010[0.25] PER SIDE.

8-Pin SOIC (M)

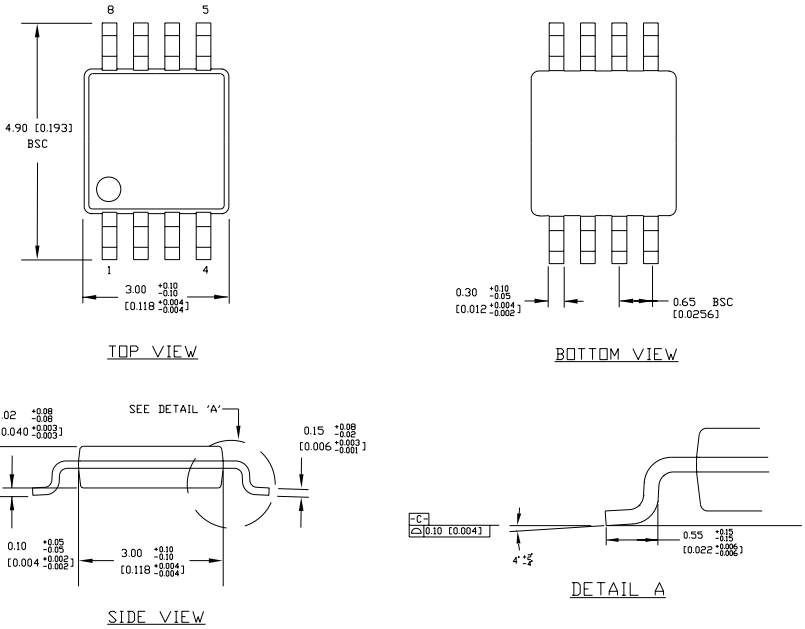

NOTES:
1. DIMENSIONS ARE IN MM [INCHES].
2. CONTROLLING DIMENSION: MM
3. DIMENSION DOES NOT INCLUDE MOLD FLASH OR PROTRUSIONS, EITHER OF WHICH SHALL NOT EXCEED 0.20 [0.008] PER SIDE.

8-Pin MSOP (MM)

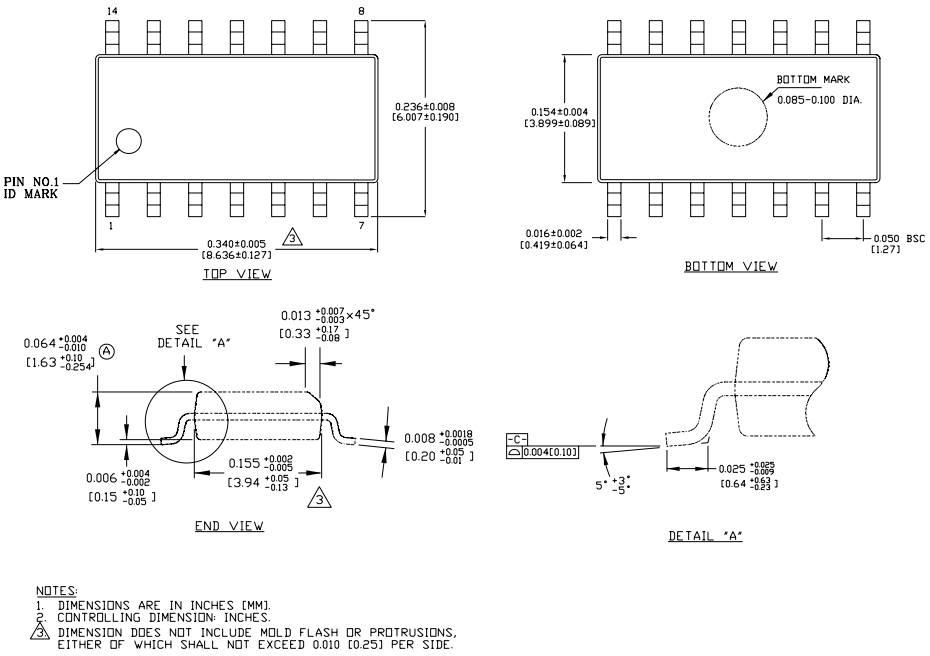

14-Pin SOIC (M)

MICREL INC. 2180 FORTUNE DRIVE SAN JOSE, CA 95131 USA

TEL + 1 (408) 944-0800 FAX + 1 (408) 474-1000 WEB http://www.micrel.com

This information furnished by Micrel in this data sheet is believed to be accurate and reliable. However no responsibility is assumed by Micrel for its use. Micrel reserves the right to change circuitry and specifications at any time without notification to the customer.

Micrel Products are not designed or authorized for use as components in life support appliances, devices or systems where malfunction of a product can reasonably be expected to result in personal injury. Life support devices or systems are devices or systems that (a) are intended for surgical implant into the body or (b) support or sustain life, and whose failure to perform can be reasonably expected to result in a significant injury to the user. A Purchaser's use or sale of Micrel Products for use in life support appliances, devices or systems is a Purchaser's own risk and Purchaser agrees to fully indemnify Micrel for any damages resulting from such use or sale.

© 2000 Micrel Incorporated