MIC37122 Evaluation Board

High-Performance, 1A, Low-Noise, Low Dropout Regulator

General Description

The MIC37122 is a high-performance low-noise, low dropout regulator. The MIC37122 is capable of sourcing 1A output current and offers high-PSRR and low output noise, which makes the IC an ideal general purpose LDO regulator for consumer applications such as set-top boxes and gaming consoles.

The MIC37122 offers 2.5% accuracy, dropout of less than 400mV at 1A, and low ground current (typically 250µA). The MIC37122 can also be put into zero-off-mode current state, drawing little current when disabled. Additionally, an output load discharge feature allows the MIC37122 to discharge large capacitive loads through a low impedance path to ground upon disabling the LDO regulator.

The MIC37122 has an operating junction temperature range of –40°C to +125°C and is available in lead-free (RoHS-compliant) SOIC-8 and 2.0mm × 2.0mm MLF® packages. The MLF® package occupies only 4mm^2 of PCB area, an 86% reduction in board area compared to SOIC-8 packaging.

Datasheets and support documentation can be found on Micrel's web site at: www.micrel.com.

Requirements

The MIC37122 evaluation board requires a single input power supply. The V_{IN} power supply must be able to deliver 2.375V to 5.5V with more than 1A capability. The output load can either be an active or passive load.

Precautions

The evaluation board does not have reverse polarity protection. Applying a negative voltage to the V_{IN} terminal may damage the device. Additionally, the maximum V_{IN} operating voltage of the MIC37122 evaluation board is 5.5V. Exceeding 5.5V on V_{IN} could permanently damage the device.

Getting Started

1. **Connect an external supply to V_{IN} terminal**. Apply desired input voltage to the V_{IN} and ground (GND) terminals of the evaluation board, paying careful attention to polarity and supply voltage. An ammeter may be placed between the input supply and the V_{IN} terminal to the evaluation board. Ensure that the supply voltage is monitored at the V_{IN} terminal. The ammeter and/or power lead resistance can reduce the voltage supplied to the input.
2. **Connect the load to the V_{OUT} and GND terminals**. The load can be either passive (resistive) or active (as in an electronic load). An ammeter can be placed between the load and the V_{OUT} terminal. Ensure that the output voltage is monitored at the V_{OUT} terminal. The V_{OUT} can be adjusted by changing the feedback resistors (see *Output Voltage* section in this data sheet).
3. **Enable the MIC37122**. The enable (EN) pin is provided on the evaluation board with a 10k pull-up resistor. The output of the MIC37122 may be turned off by shorting the EN pin to ground. An external connection on the board provides easy access to the EN pin. Removing the pull-up resistor and leaving the EN pin floating will cause the regulator to operate in an indeterminate state.

Output Voltage

The output voltage on the MIC37122 evaluation board is adjustable. The output is set by adjusting the feedback resistors (R1 and R2) and can be calculated as follows:

$$V_{OUT} = V_{REF} \times \left(1 + \frac{R1}{R2}\right)$$

With V_{REF} = 1.0V:

$$R2 = \frac{R1}{VOUT - 1.0V}$$

MLF and *Micro*LeadFrame are trademarks of Amkor Technology, Inc.

Ordering Information

Part Number	Description	Package
MIC37122YM EV	Adjustable Output	SOIC-8L
MIC37122YMT EV	Adjustable Output	2mm × 2mm MLF®-6L

MIC37122YM Evaluation Board Schematic (8-Pin SOIC)

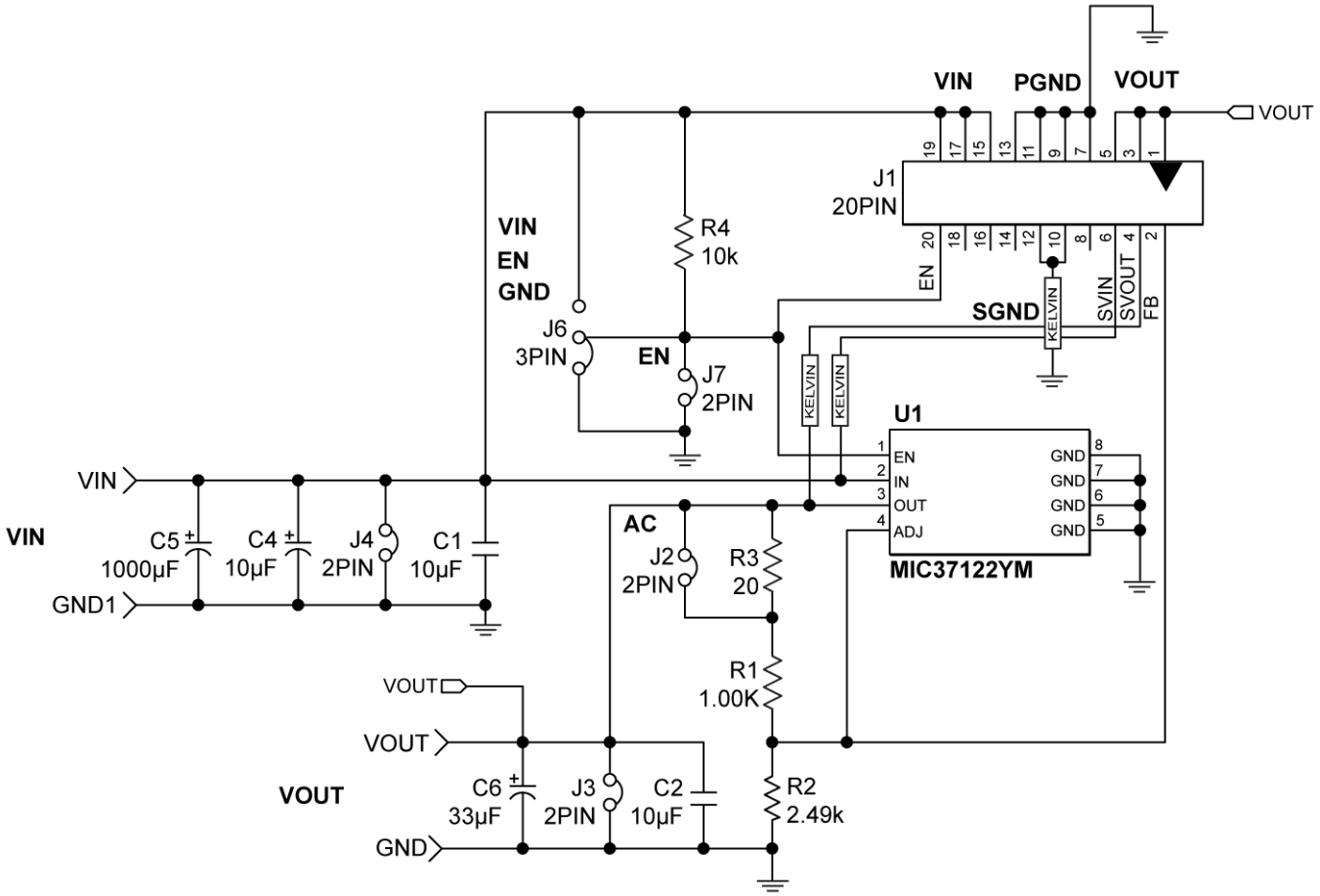

MIC37122YM Evaluation Board
(J1, J2, and R3 are for test purposes only)

Bill of Materials

Item	Part Number	Manufacturer	Description	Qty.
C1, C2	C0805C106K8PACTU	Kemet[1]	10µF/10V ceramic capacitor, X5R, size 0805	2
	GRM21BR60J106ME19	Murata[2]		
C4, C6	C3216X5ROJ476M	TDK[3]	47µF/6.3V ceramic capacitor, X5R, size 1206 (greater or lesser capacitance value or larger case size is acceptable)	DNP
	GRM31CR60J476ME19L	Murata[3]		
	12066D476MAT2A	AVX[4]		
C5	—	—	Large value electrolytic capacitor	DNP
R1	CRCW08051000F	Vishay[5]	100Ω film resistor, size 0805, 1%	1
R2	CRCW08051240F	Vishay[5]	124Ω film resistor, size 0805, 1%	1
R3	CRCW080500R0F	Vishay[5]	0Ω film resistor, size 0805, 1%	1
R4	CRCW08051002F	Vishay[5]	10kΩ film resistor, size 0805, 1%	1
U1	**MIC37122YM**	**Micrel, Inc.[6]**	**High-Performance, 1A, Low-Noise, Low Dropout Regulator**	**1**

Notes:

1. Kemet: www.kemet.com.
2. Murata: www.murata.com.
3. TDK: www.tdk.com.
4. AVX: www.avx.com.
5. Vishay: www.vishay.com.
6. **Micrel, Inc.: www.micrel.com.**

MIC37122YM PCB Layout Recommendations

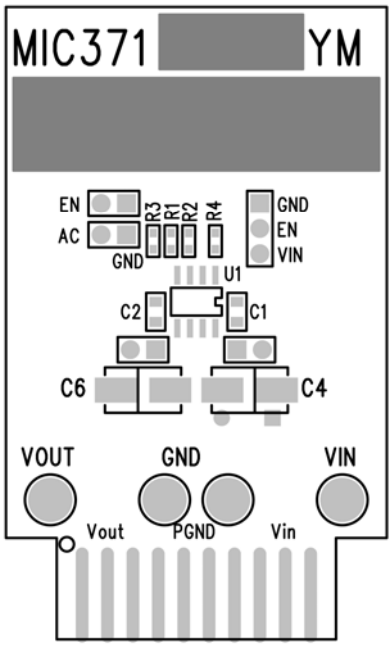

MIC37122YM Evaluation Board – Top Layer

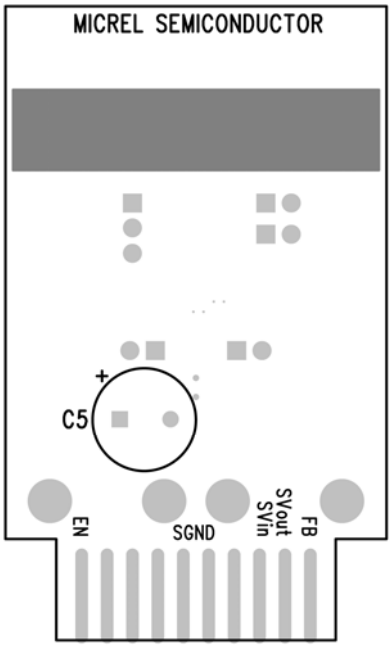

MIC37122YM Evaluation Board – Bottom Layer

MIC37122YMT Evaluation Board Schematic (2mm × 2mm 6-Pin MLF®)

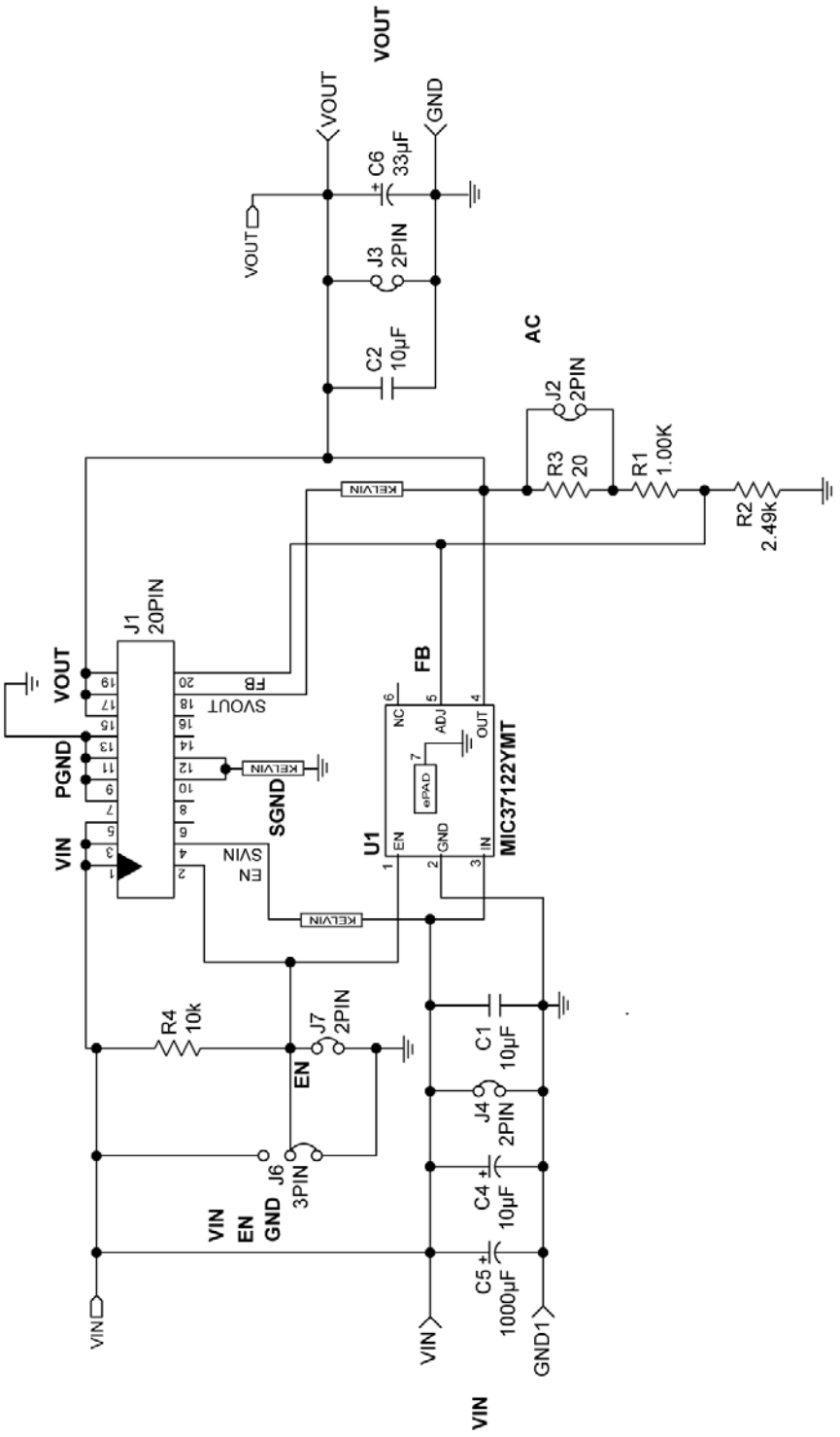

MIC37122YMT Evaluation Board
(J1, J2, and R3 are for test purposes only)

Bill of Materials

Item	Part Number	Manufacturer	Description	Qty.	Cost
C1, C2	C0805C106K8PACTU	Kemet[1]	10µF/10V ceramic capacitor, X5R, 10%, 0805	1	0.067
	GRM21BR60J106ME19L	Murata[2]	10µF/10V ceramic capacitor, X5R, 20%, 0805	1	0.04158
C4, C6	C3216X5ROJ476M	TDK[3]	47µF/6.3V ceramic capacitor, X5R, size 1206 (greater or lesser capacitance value or larger case size is acceptable)	DNP	
	GRM31CR60J476ME19L	Murata[3]			
	12066D476MAT2A	AVX[4]			
C5	—	—	Large value electrolytic capacitor	DNP	
R1	CRCW08051000F	Vishay[5]	100Ω film resistor, size 0805, 1%	1	
R2	CRCW08051240F	Vishay[5]	124Ω film resistor, size 0805, 1%	1	
R3	CRCW080500R0F	Vishay[5]	0Ω film resistor, size 0805, 1%	1	
R4	CRCW08051002F	Vishay[5]	10kΩ film resistor, size 0805, 1%	1	
U1	**MIC37122YMT**	**Micrel, Inc.[6]**	**High-Performance, 1A, Low-Noise, Low Dropout Regulator**	**1**	

Notes:

1. Kemet: www.kemet.com.
2. Murata: www.murata.com.
3. TDK: www.tdk.com.
4. AVX: www.avx.com.
5. Vishay: www.vishay.com.
6. **Micrel, Inc.: www.micrel.com.**

MIC37122YMT PCB Layout Recommendations

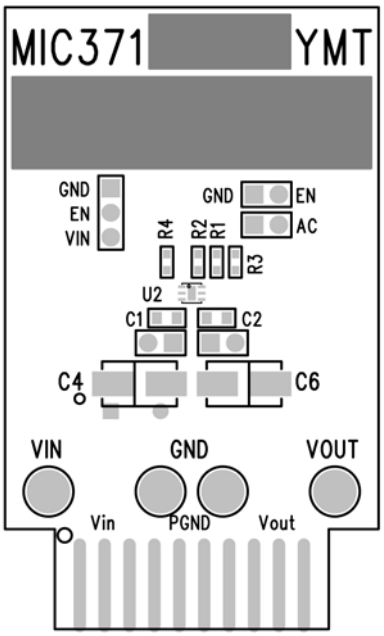

MIC37122YMT Evaluation Board – Top Layer

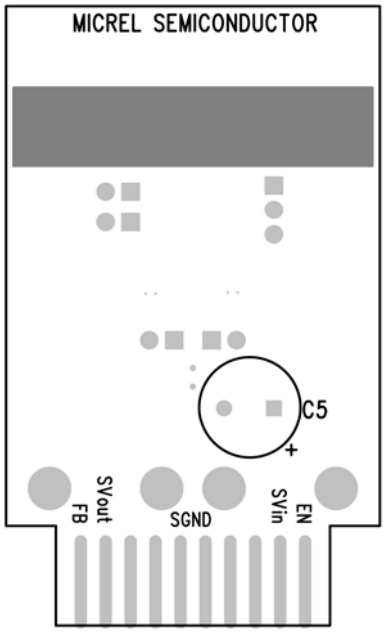

MIC37122YMT Evaluation Board – Bottom Layer

MICREL, INC. 2180 FORTUNE DRIVE SAN JOSE, CA 95131 USA
TEL +1 (408) 944-0800 FAX +1 (408) 474-1000 WEB http://www.micrel.com

Micrel makes no representations or warranties with respect to the accuracy or completeness of the information furnished in this data sheet. This information is not intended as a warranty and Micrel does not assume responsibility for its use. Micrel reserves the right to change circuitry, specifications and descriptions at any time without notice. No license, whether express, implied, arising by estoppel or otherwise, to any intellectual property rights is granted by this document. Except as provided in Micrel's terms and conditions of sale for such products, Micrel assumes no liability whatsoever, and Micrel disclaims any express or implied warranty relating to the sale and/or use of Micrel products including liability or warranties relating to fitness for a particular purpose, merchantability, or infringement of any patent, copyright or other intellectual property right.

Micrel Products are not designed or authorized for use as components in life support appliances, devices or systems where malfunction of a product can reasonably be expected to result in personal injury. Life support devices or systems are devices or systems that (a) are intended for surgical implant into the body or (b) support or sustain life, and whose failure to perform can be reasonably expected to result in a significant injury to the user. A Purchaser's use or sale of Micrel Products for use in life support appliances, devices or systems is a Purchaser's own risk and Purchaser agrees to fully indemnify Micrel for any damages resulting from such use or sale.

© 2011 Micrel, Incorporated.