MIC2920A/29201/29202/29204

400mA Low-Dropout Voltage Regulator

General Description

The MIC2920A family are "bulletproof," efficient voltage regulators with very low dropout voltage (typically 40mV at light loads and 370mV at 250mA), and very low quiescent current (140µA typical). The quiescent current of the MIC2920A increases only slightly in dropout, prolonging battery life. Key MIC2920A features include protection against reversed battery, fold-back current limiting, and automotive "load dump" protection (60V positive transient).

The MIC2920 is available in several configurations. The MIC2920A-x.x devices are three pin fixed voltage regulators available in 3.3V, 4.85V, 5V, and 12V outputs. The MIC29201 is a fixed regulator offering a logic compatible ON/OFF (shutdown) input and an error flag output. This flag may also be used as a power-on reset signal. A logic-compatible shutdown input is provided on the adjustable MIC29202 which allows the regulator to be switched on and off. The MIC29204 8-pin SOIC adjustable regulator includes both shutdown and error flag pins and may be pin-strapped for 5V output or programmed from 1.24V to 26V using two external resistors.

Features

- High output voltage accuracy
- Guaranteed 400mA output
- Low quiescent current
- Low dropout voltage
- Extremely tight load and line regulation
- Very low temperature coefficient
- Current and thermal limiting
- Input withstands –20V reverse battery and 60V positive transients
- Error flag warns of output dropout
- Logic-controlled electronic shutdown
- Output programmable from 1.24V to 26V (MIC29202/MIC29204)
- Available in TO-220, TO-220-5, and surface-mount TO-263-5, SOT-223, and SO-8 packages.

Applications

- Battery-powered equipment
- Cellular telephones
- Laptop, notebook, and palmtop computers
- PCMCIA V_{CC} and V_{PP} regulation/switching
- Bar code scanners
- Automotive electronics
- SMPS post-regulators
- Voltage reference
- High-efficiency linear power supplies

Pin Configuration

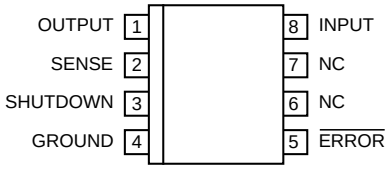

MIC29201-3.3BM (SO-8)

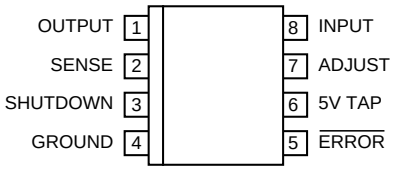

MIC29204BM (SO-8)

5-Lead Package Pinouts

	MIC29201	MIC29202
1)	Error	Adjust
2)	Input	Shutdown
3)	Ground	Ground
4)	Output	Input
5)	Shutdown	Output

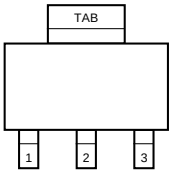

INPUT OUTPUT
GROUND

MIC2920A-x.xBS (SOT-223)

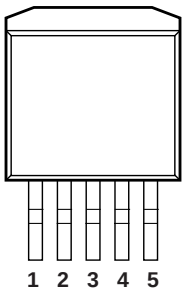

MIC29201/29202BU (TO-263-5)

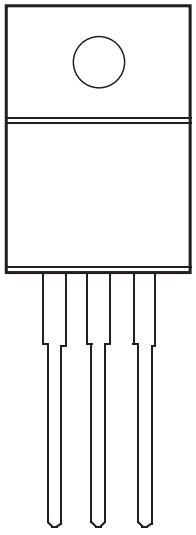

INPUT OUTPUT
GROUND

MIC2920A-xxBT (TO-220)

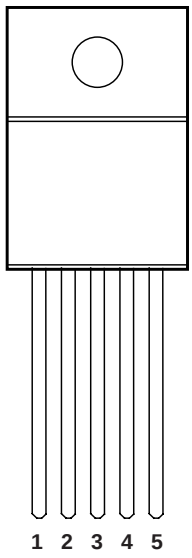

MIC29201/29202BT (TO-220-5)

Tab is Ground on SOT-223, TO-220, and TO-263 packages.

Ordering Information

Part Number	Voltage	Temperature Range*	Package
MIC2920A-3.3BS	3.3V	–40°C to +125°C	SOT-223
MIC2920A-3.3BT	3.3V	–40°C to +125°C	TO-220
MIC2920A-4.8BS	4.85V	–40°C to +125°C	SOT-223
MIC2920A-4.8BT	4.85V	–40°C to +125°C	TO-220
MIC2920A-5.0BS	5.0V	–40°C to +125°C	SOT-223
MIC2920A-5.0BT	5.0V	–40°C to +125°C	TO-220
MIC2920A-12BS	12V	–40°C to +125°C	SOT-223
MIC2920A-12BT	12V	–40°C to +125°C	TO-220
MIC29201-3.3BM	3.3V	–40°C to +125°C	SO-8
MIC29201-3.3BT	3.3V	–40°C to +125°C	TO-220-5
MIC29201-3.3BU	3.3V	–40°C to +125°C	TO-263-5
MIC29201-4.8BT	4.85V	–40°C to +125°C	TO-220-5
MIC29201-4.8BU	4.85V	–40°C to +125°C	TO-263-5
MIC29201-5.0BT	5.0V	–40°C to +125°C	TO-220-5
MIC29201-5.0BU	5.0V	–40°C to +125°C	TO-263-5
MIC29201-12BT	12V	–40°C to +125°C	TO-220-5
MIC29201-12BU	12V	–40°C to +125°C	TO-263-5
MIC29202BT	Adj	–40°C to +125°C	TO-220-5
MIC29202BU	Adj	–40°C to +125°C	TO-263-5
MIC29204BM	5V and Adj	–40°C to +125°C	SO-8
MIC29204BN	5V and Adj	–40°C to +125°C	8-pin PDIP

Absolute Maximum Ratings

If Military/Aerospace specified devices are required, contact your local Micrel representative/distributor for availability and specifications.

Power Dissipation ..... Internally Limited, **Note 1**

Lead Temperature (Soldering, 5 seconds) ..... 260°C
Storage Temperature Range ..... –65°C to +150°C
Operating Junction Temperature Range
..... –40°C to +125°C
Thermal Characteristics:
SOT–223 θ_{JC} ..... 15°C/W
TO-220 θ_{JC} ..... 3°C/W
TO-263 θ_{JC} ..... 3°C/W
8-Pin SOIC θ_{JA} ..... **Note 1**
Input Supply Voltage ..... –20V to +60V
Operating Input Supply Voltage ..... 2V† to 26V
Adjust Input Voltage (Notes 9 and 10)
..... –1.5V to +26V
Shutdown Input Voltage ..... –0.3V to +30V
Error Comparator Output Voltage ..... –0.3V to +30V

† Across the full operating temperature, the minimum input voltage range for full output current is 4.3V to 26V. Output will remain in-regulation at lower output voltages and low current loads down to an input of 2V at 25°C.

* Junction temperatures

Electrical Characteristics

Limits in standard typeface are for T_J = 25°C and limits in **boldface** apply over the full operating temperature range. Unless otherwise specified, $V_{IN} = V_{OUT} + 1V$, I_L = 1mA, C_L = 10µF. Adjustable version are set for an output of 5V. The MIC29202 $V_{SHUTDOWN} \leq 0.7V$. The eight pin MIC29204 is configured with the Adjust pin tied to the 5V Tap, the Output is tied to Output Sense (V_{OUT} = 5V), and $V_{SHUTDOWN} \leq 0.7V$.

Symbol	Parameter	Conditions	Min	Typical	Max	Units
V_O	Output Voltage Accuracy	Variation from factory trimmed V_{OUT}	–1 **–2**		1 **2**	%
		1mA ≤ I_L ≤ 400mA, across temp. range	**–2.5**		**2.5**	
		MIC2920A-12 and 29201-12 only	–1.5 **–3**		1.5 **3**	
		1mA ≤ I_L ≤ 400mA, across temp. range	**–4**		**4**	
$\frac{\Delta V_O}{\Delta T}$	Output Voltage Temperature Coef.	(Note 2)		20	**100**	ppm/°C
		V_{OUT} > 10V only		80	**350**	
$\frac{\Delta V_O}{V_O}$	Line Regulation	$V_{IN} = V_{OUT}$ + 1V to 26V		0.03	0.10 **0.40**	%
$\frac{\Delta V_O}{V_O}$	Load Regulation	I_L = 1 to 250mA (Note 3)		0.04	0.16 **0.30**	%
$V_{IN} – V_O$	Dropout Voltage (Note 4)	I_L = 1mA		100	150 **180**	mV
		I_L = 100mA		250		
		V_{OUT} > 10V only		350		
		I_L = 250mA		370		
		V_{OUT} > 10V only		500		
		I_L = 400mA		450	600 **750**	
I_{GND}	Ground Pin Current (Note 5)	I_L = 1mA		140	200 **300**	µA
		I_L = 100mA		1.3	2 **2.5**	mA
		I_L = 250mA		5	9 **12**	
		I_L = 400mA		13	15	
I_{GNDDO}	Ground Pin Current at Dropout (Note 5)	V_{IN} = 0.5V less than designed V_{OUT} ($V_{OUT} \geq 3.3V$) I_O = 1mA		180	**400**	µA
I_{LIMIT}	Current Limit	V_{OUT} = 0V (Note 6)		425	1000 **1200**	mA
$\frac{\Delta V_O}{\Delta P_D}$	Thermal Regulation	(Note 7)		0.05	0.2	%/W
e_n	Output Noise Voltage (10Hz to 100kHz) I_L = 100mA	C_L = 10µF		400		µV RMS
		C_L = 100µF		260		

Electrical Characteristics (Continued)

MIC29202, MIC29204

Parameter	Conditions	Min	Typ	Max	Units
Reference Voltage	MIC29202	1.223 **1.210**	1.235	1.247 **1.260**	V
Reference Voltage	MIC29202 (Note 8)	**1.204**		**1.266**	V
Reference Voltage	MIC29204	1.210 **1.200**	1.235	1.260 **1.270**	V
Reference Voltage	MIC29204 (Note 8)	**1.185**		**1.285**	V
Adjust Pin Bias Current			20	40 **60**	nA
Reference Voltage Temperature Coefficient	(Note 7)		20		ppm/°C
Adjust Pin Bias Current Temperature Coefficient			0.1		nA/°C
Error Comparator	**MIC29201, MIC29204**				
Output Leakage Current	V_{OH} = 26V		0.01	1.00 **2.00**	µA
Output Low Voltage	V_{IN} = 4.5V I_{OL} = 250µA		150	250 **400**	mV
Upper Threshold Voltage	(Note 9)	40 **25**	60		mV
Lower Threshold Voltage	(Note 9)		75	95 **140**	mV
Hysteresis	(Note 9)		15		mV
Shutdown Input	**MIC29201, MIC29202, MIC29204**				
Input Logic Voltage	Low (ON) High (OFF)	 **2.0**	1.3	 **0.7**	V
Shutdown Pin Input Current	$V_{SHUTDOWN}$ = 2.4V		30	50 **100**	µA
	$V_{SHUTDOWN}$ = 26V		450	600 **750**	µA
Regulator Output Current in Shutdown	(Note 10)		3	10 **20**	µA

General Note: Devices are ESD protected; however, handling precautions are recommended.

Note 1: Absolute maximum ratings indicate limits beyond which damage to the component may occur. Electrical specifications do not apply when operating the device outside of its rated operating conditions. The maximum allowable power dissipation is a function of the maximum junction temperature, $T_{J\,(MAX)}$, the junction-to-ambient thermal resistance, θ_{JA}, and the ambient temperature, T_A. The maximum allowable power dissipation at any ambient temperature is calculated using: $P_{(MAX)} = (T_{J(MAX)} - T_A) / \theta_{JA}$. Exceeding the maximum allowable power dissipation will result in excessive die temperature, and the regulator will go into thermal shutdown. The junction to ambient thermal resistance of the MIC29204BM is 160°C/W mounted on a PC board.

Note 2: Output voltage temperature coefficient is defined as the worst case voltage change divided by the total temperature range.

Note 3: Regulation is measured at constant junction temperature using low duty cycle pulse testing. Changes in output voltage due to heating effects are covered by the thermal regulation specification.

Note 4: Dropout Voltage is defined as the input to output differential at which the output voltage drops 100mV below its nominal value measured at 1V differential. At low values of programmed output voltage, the minimum input supply voltage of 4.3V over temperature must be taken into account. The MIC2920A operates down to 2V of input at reduced output current at 25°C.

Note 5: Ground pin current is the regulator quiescent current. The total current drawn from the supply is the sum of the load current plus the ground pin current.

Note 6: The MIC2920A features fold-back current limiting. The short circuit (V_{OUT} = 0V) current limit is less than the maximum current with normal output voltage.

Note 7: Thermal regulation is defined as the change in output voltage at a time T after a change in power dissipation is applied, excluding load or line regulation effects. Specifications are for a 200mA load pulse at V_{IN} = 20V (a 4W pulse) for T = 10ms.

Note 8: $V_{REF} \le V_{OUT} \le (V_{IN} - 1\ V)$, $4.3V \le V_{IN} \le 26V$, $1\ mA < I_L \le 400\ mA$, $T_J \le T_{J\,MAX.}$

Note 9: Comparator thresholds are expressed in terms of a voltage differential at the Adjust terminal below the nominal reference voltage measured at 6V input. To express these thresholds in terms of output voltage change, multiply by the error amplifier gain = V_{OUT} /V_{REF} = (R1 + R2)/R2. For example, at a programmed output voltage of 5V, the Error output is guaranteed to go low when the output drops by 95 mV x 5V/1.235 V = 384 mV. Thresholds remain constant as a percent of VOUT as VOUT is varied, with the dropout warning occurring at typically 5% below nominal, 7.7% guaranteed.

Note 10: $V_{SHUTDOWN} \ge 2V$, $V_{IN} \le 26V$, V_{OUT} = 0, with Adjust pin tied to 5V Tap or to the R1, R2 junction (see Figure 3) with R1 ≥ 150kΩ.

Note 11: When used in dual supply systems where the regulator load is returned to a negative supply, the output voltage must be diode clamped to ground.

Note 12: Maximum positive supply voltage of 60V must be of limited duration (< 100ms) and duty cycle (≤ 1%). The maximum continuous supply voltage is 26V.

Schematic Diagram

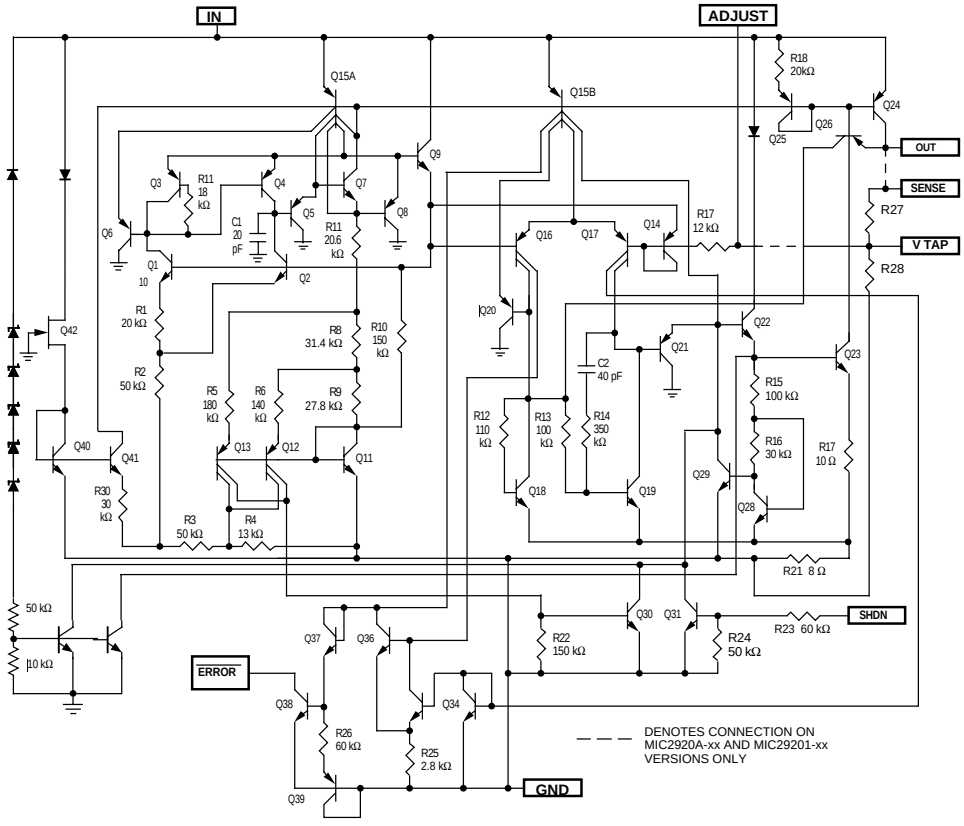

Typical Characteristics

Dropout Voltage vs. Output Current

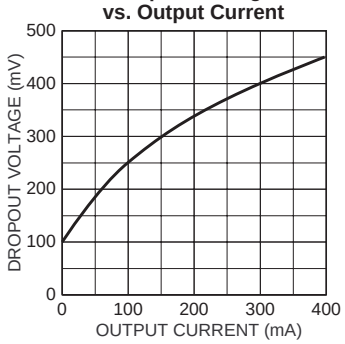

Dropout Voltage vs. Temperature

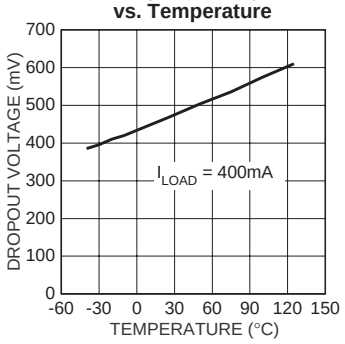

Dropout Characteristics

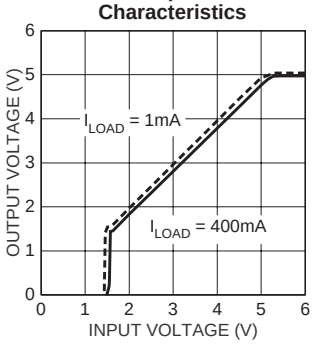

Ground Current vs. Output Current

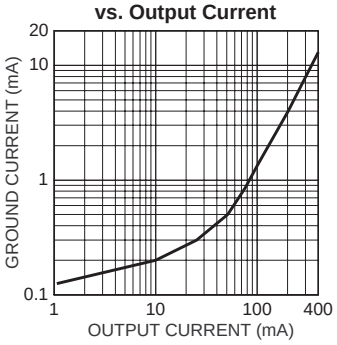

Ground Current vs. Supply Voltage

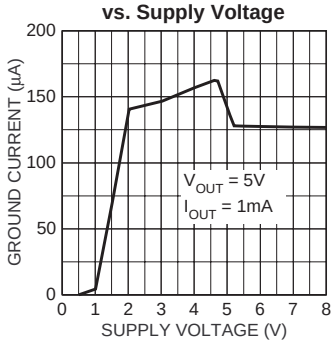

Ground Current vs. Supply Voltage

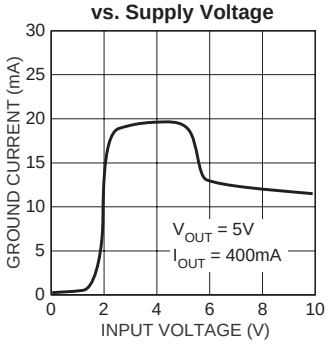

Ground Current vs. Temperature

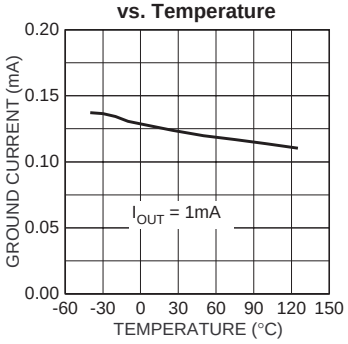

Ground Current vs. Temperature

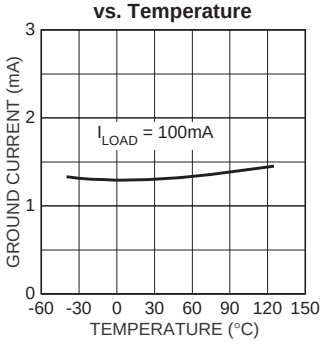

Ground Current vs. Temperature

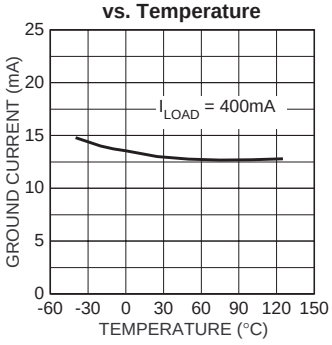

Fixed 3.3V Output Voltage vs. Temperature

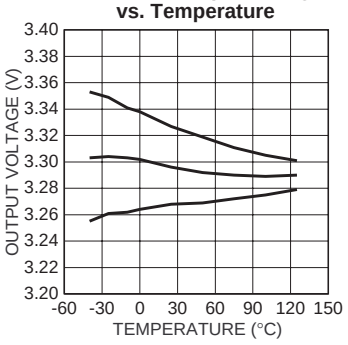

Short Circuit and Maximum Current vs. Temperature

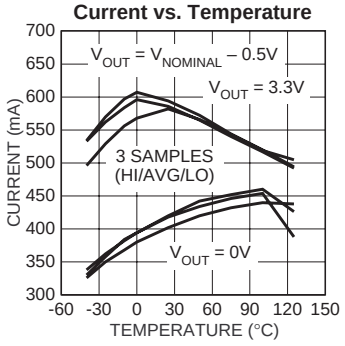

Ground Current vs. Supply Voltage

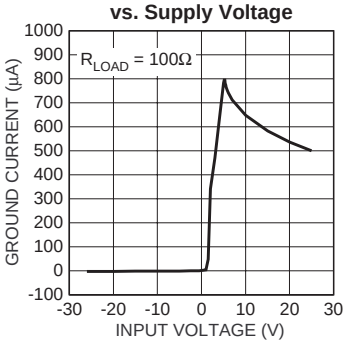

MIC29201/2 Shutdown Current vs. Temperaure

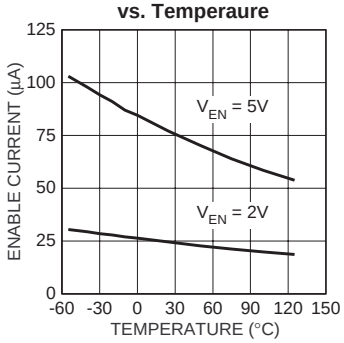

Load Transient

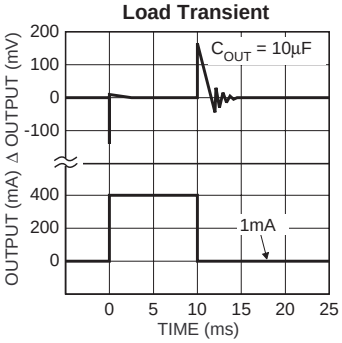

Load Transient

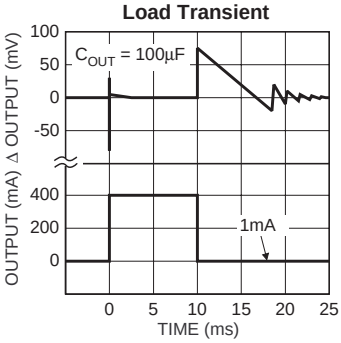

MIC29202 Adjust Pin Current vs. Temperature

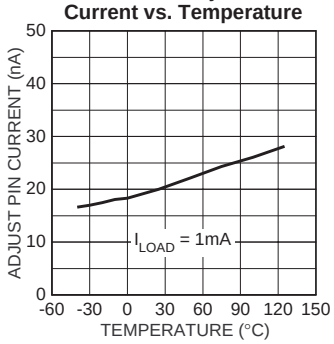

Line Transient

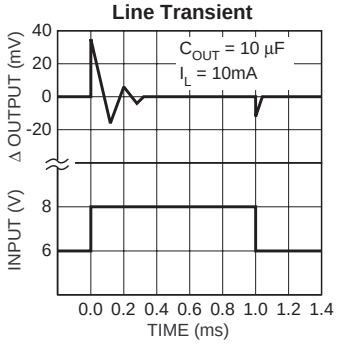

Line Transient

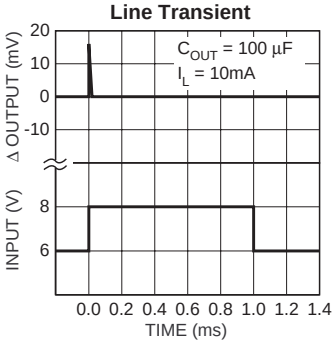

Output Impedance vs. Frequency

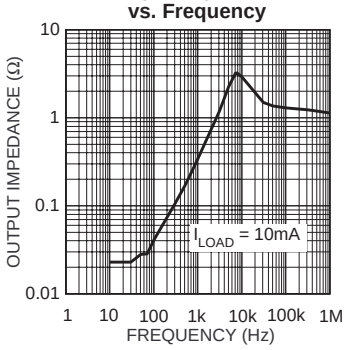

Ripple Rejection

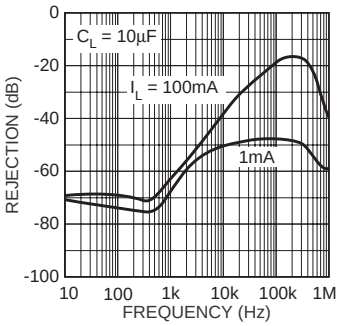

Applications Information

External Capacitors

A 10µF (or greater) capacitor is required between the MIC2920A output and ground to prevent oscillations due to instability. Most types of tantalum or aluminum electrolytics will be adequate; film types will work, but are costly and therefore not recommended. Many aluminum electrolytics have electrolytes that freeze at about –30°C, so solid tantalums are recommended for operation below –25°C. The important parameters of the capacitor are an effective series resistance of about 5Ω or less and a resonant frequency above 500kHz. The value of this capacitor may be increased without limit.

At lower values of output current, less output capacitance is required for output stability. The capacitor can be reduced to 2.2µF for current below 10mA or 1µF for currents below 1mA. Adjusting the MIC29202/29204 to voltages below 5V runs the error amplifier at lower gains so that more output capacitance is needed. For the worst-case situation of a 500mA load at 1.23V output (Output shorted to Adjust) a 47µF (or greater) capacitor should be used.

The MIC2920A/29201 will remain in regulation with a minimum load of 1mA. When setting the output voltage of the MIC29202/29204 versions with external resistors, the current through these resistors may be included as a portion of the minimum load.

A 0.1µF capacitor should be placed from the MIC2920A input to ground if there is more than 10 inches of wire between the input and the AC filter capacitor or if a battery is used as the input.

Error Detection Comparator Output (MIC29201/MIC29204)

A logic low output will be produced by the comparator whenever the MIC29201/29204 output falls out of regulation by more than approximately 5%. This figure is the comparator's built-in offset of about 75mV divided by the 1.235V reference voltage. (Refer to the block diagram on Page 1). This trip level remains "5% below normal" regardless of the programmed output voltage of the MIC29201/29204. For example, the error flag trip level is typically 4.75V for a 5V output or 11.4V for a 12V output. The out of regulation condition may be due either to low input voltage, extremely high input voltage, current limiting, or thermal limiting.

Figure 1 is a timing diagram depicting the $\overline{\text{ERROR}}$ signal and the regulated output voltage as the MIC29201/29204 input is ramped up and down. The $\overline{\text{ERROR}}$ signal becomes valid (low) at about 1.3V input. It goes high at about 5V input (the input voltage at which V_{OUT} = 4.75). Since the MIC29201/29204's dropout voltage is load-dependent (see curve in Typical Performance Characteristics), the input voltage trip point (about 5V) will vary with the load current. The output voltage trip point (approximately 4.75V) does not vary with load.

The error comparator has an NPN open-collector output which requires an external pull-up resistor. Depending on system requirements, this resistor may be returned to the 5V output or some other supply voltage. In determining a value for this resistor, note that while the output is rated to sink 250µA, this sink current adds to battery drain in a low battery condition. Suggested values range from 100k to 1MΩ. The resistor is not required if this output is unused.

Programming the Output Voltage (MIC29202/29204)

The MIC29202/29204 may be programmed for any output voltage between its 1.235V reference and its 26V maximum rating, using an external pair of resistors, as shown in Figure 3.

The complete equation for the output voltage is

$$V_{OUT} = V_{REF} \times \{ 1 + R_1/R_2 \} - |I_{FB}| R_1$$

where V_{REF} is the nominal 1.235 reference voltage and I_{FB} is the Adjust pin bias current, nominally 20nA. The minimum recommended load current of 1µA forces an upper limit of 1.2MΩ on the value of R_2, if the regulator must work with no load (a condition often found in CMOS in standby), I_{FB} will produce a –2% typical error in V_{OUT} which may be eliminated at room temperature by trimming R_1. For better accuracy, choosing R_2 = 100k reduces this error to 0.17% while increasing the resistor program current to 12µA. Since the MIC29202/29204 typically draws 110µA at no load with SHUTDOWN open-circuited, this is a negligible addition. The MIC29204 may be pin-strapped for 5V using the internal voltage divider by tying Pin 1 (output) to Pin 2 (sense) and Pin 7 (Adjust) to Pin 6 (V Tap).

Configuring the MIC29201-3.3BM

For the MIC29201-3.3BM, the output (Pin 1) and sense pin (pin 2), *must* be connected to ensure proper operation. They are not connected internally.

Reducing Output Noise

In reference applications it may be advantageous to reduce the AC noise present at the output. One method is to reduce the regulator bandwidth by increasing the size of the output

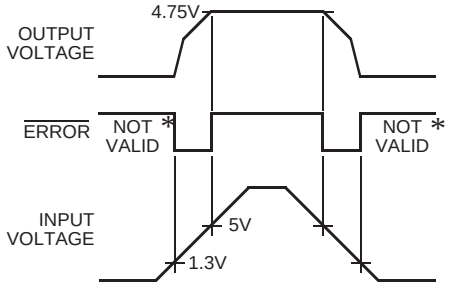

* SEE APPLICATIONS INFORMATION

Figure 1. $\overline{\text{ERROR}}$ Output Timing

capacitor. This is relatively inefficient, as increasing the capacitor from 1µF to 220µF only decreases the noise from 430µV to 160µV_{RMS} for a 100kHz bandwidth at 5V output. Noise can be reduced fourfold by a bypass capacitor across R_1, since it reduces the high frequency gain from 4 to unity. Pick

$$C_{BYPASS} \cong \frac{1}{2\pi R_1 \bullet 200\ Hz}$$

or about 0.01µF. When doing this, the output capacitor must be increased to 10µF to maintain stability. These changes reduce the output noise from 430µV to 100µV rms for a 100kHz bandwidth at 5V output. With the bypass capacitor added, noise no longer scales with output voltage so that improvements are more dramatic at higher output voltages.

Automotive Applications

The MIC2920A is ideally suited for automotive applications for a variety of reasons. It will operate over a wide range of input voltages with very low dropout voltages (40mV at light loads), and very low quiescent currents (100µA typical). These features are necessary for use in battery powered systems, such as automobiles. It is a “bulletproof” device with the ability to survive both reverse battery (negative transients up to 20V below ground), and load dump (positive transients up to 60V) conditions. A wide operating temperature range with low temperature coefficients is yet another reason to use these versatile regulators in automotive designs.

Typical Applications

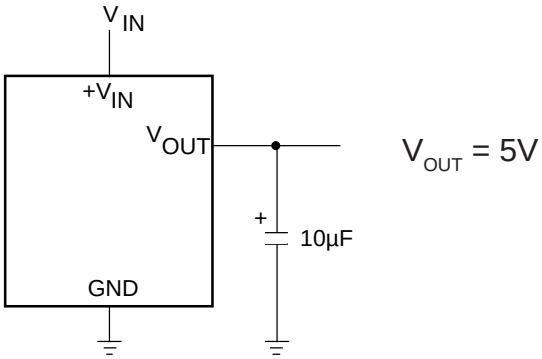

Figure 2. MIC2920A-5.0 Fixed +5V Regulator

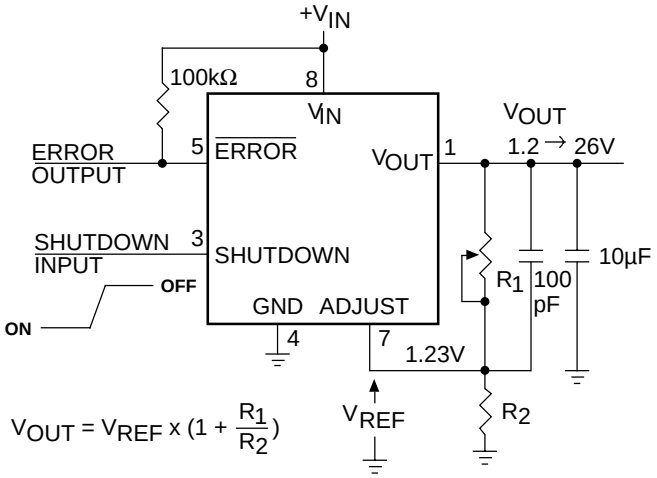

NOTE: PINS 2 AND 6 ARE LEFT OPEN

Figure 3. MIC29202/29204 Adjustable Regulator. Pinout is for MIC29204.

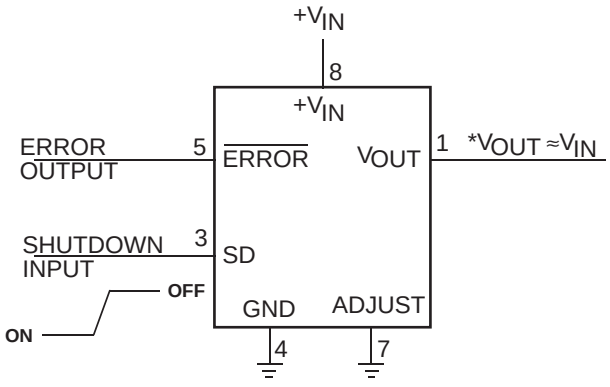

*MINIMUM INPUT-OUTPUT VOLTAGE RANGES FROM 40mV TO 400mV, DEPENDING ON LOAD CURRENT.

Figure 4. MIC29204 Wide Input Voltage Range Current Limiter

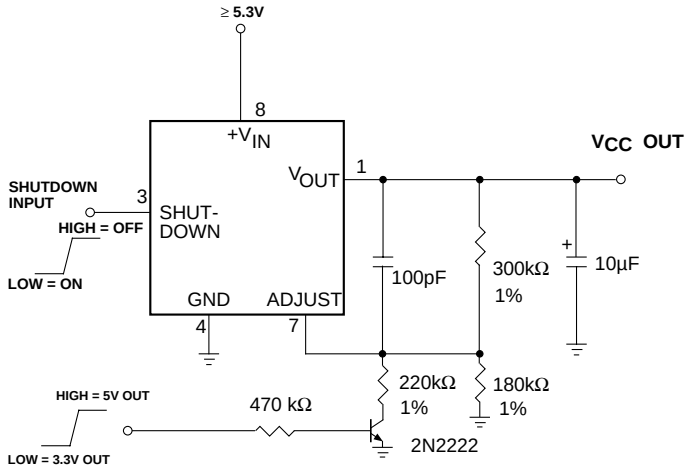

PIN 3 LOW= ENABLE OUTPUT. Q1 ON = 3.3V, Q1 OFF = 5.0V.

Figure 5. MIC29202/29204 5.0V or 3.3V Selectable Regulator with Shutdown. Pinout is for MIC29204.