MIC2875

4.8A I_{SW}, Synchronous Boost Regulator with Bi-Directional Load Disconnect

Features

- Up to 95% Efficiency
- Input Voltage Range: 2.5V to 5.5V
- Fully-Integrated, High-Efficiency, 2 MHz Synchronous Boost Regulator
- Bi-Directional True Load Disconnect
- Integrated Anti-Ringing Switch
- Minimum Switching Frequency of 45 kHz
- <1 µA Shutdown Current
- Bypass Mode for $V_{IN} \geq V_{OUT}$
- Overcurrent Protection and Thermal Shutdown
- Fixed and Adjustable Output Versions
- 8-pin 2 mm × 2 mm TDFN Package

Applications

- Tablet and Smartphones
- USB OTG and HDMI Hosts
- Portable Power Reserve Supplies
- Low-Noise Audio Applications
- Portable Equipment

General Description

The MIC2875 is a compact and highly-efficient 2 MHz synchronous boost regulator with a 4.8A switch. It features a bi-directional load disconnect function which prevents any leakage current between the input and output when the device is disabled. The MIC2875 operates in bypass mode automatically when the input voltage is greater than the target output voltage. At light loads, the boost converter goes to the PFM mode to improve the efficiency.

To minimize switching artifacts in the audio band, the MIC2875 is designed to operate with a minimum switching frequency of 45 kHz. The MIC2875 also features an integrated anti-ringing switch to minimize EMI.

The MIC2875 is available in a 8-pin 2 mm × 2 mm Thin DFN (TDFN) package, with a junction temperature range of –40°C to +125°C.

Package Type

MIC2875 (Fixed Output)
8-Pin 2x2 TDFN* (MT)
(Top View)

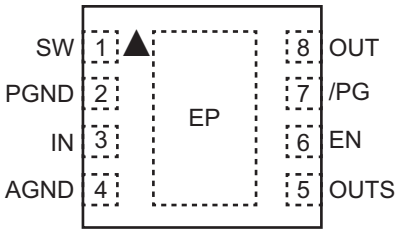

MIC2875 (Adj. Output)
8-Pin 2x2 TDFN* (MT)
(Top View)

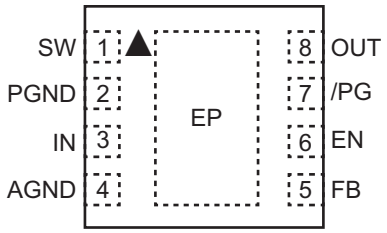

* Includes exposed thermal pad (EP), see Table 3-1.

© 2015 Microchip Technology Inc.

Typical Application Schematics

MIC2875 (Fixed Output)

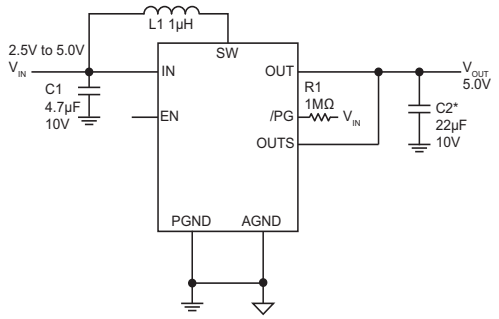

MIC2875 (Adjustable Output)

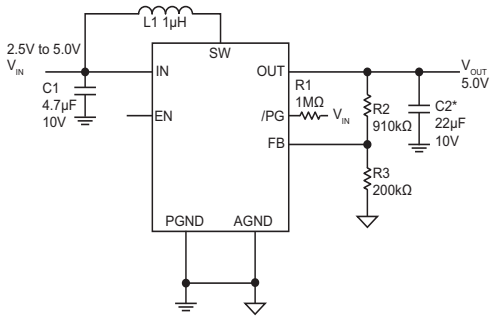

* Two more 22µF capacitors should be added in parallel with C2 for V_{IN} > 5.0V.

Efficiency vs. Load Current

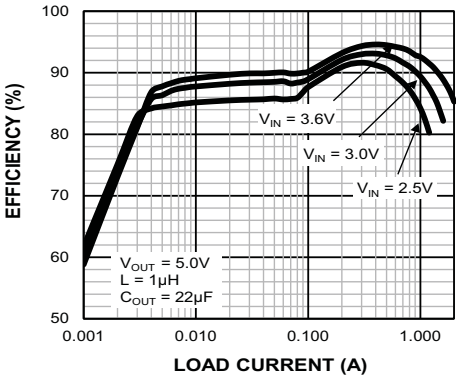

Functional Block Diagrams

MIC2875 (Fixed Output)

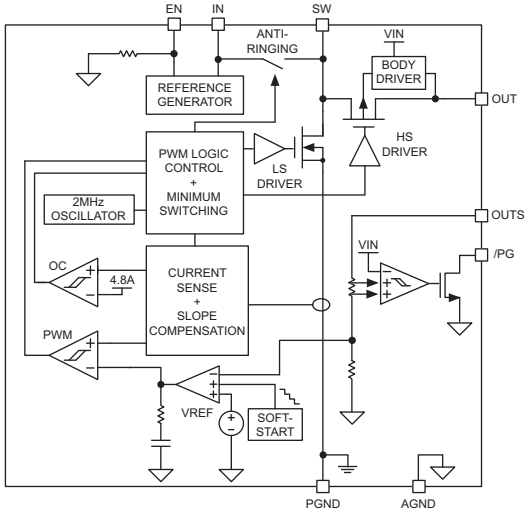

MIC2875 (Adj. Output)

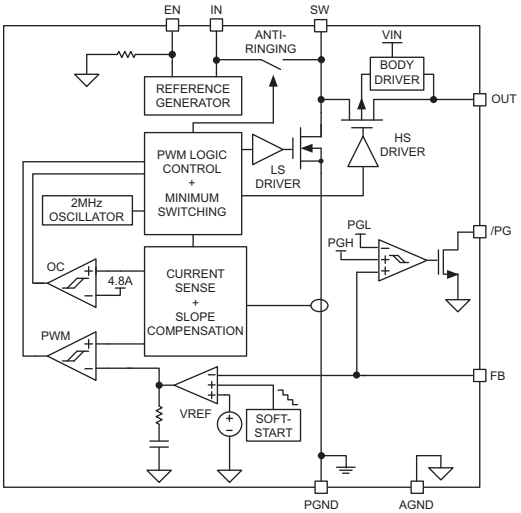

© 2015 Microchip Technology Inc.

1.0 ELECTRICAL CHARACTERISTICS

Absolute Maximum Ratings †

IN, EN, OUT, FB, /PG to PGND ..... –0.3V to +6V
AGND to PGND..... –0.3V to +0.3V
Power Dissipation ..... Internally Limited (Note 1)
ESD Rating (Note 2) ..... ±1.5 kV HBM, ±200V MM

Operating Ratings ††

Supply Voltage (V_{IN})..... +2.5V to +5.5V
Output Voltage (V_{OUT}) ..... Up to +5.5V
Enable Voltage (V_{EN}) ..... 0V to +V_{IN}

† **Notice:** Exceeding the absolute maximum ratings may damage the device.

†† **Notice:** The device is not guaranteed to function outside its operating ratings.

Note 1: The maximum allowable power dissipation of any T_A (ambient temperature) is $P_{D(max)} = (T_{J(max)} – T_A) / \Theta_{JA}$. Exceeding the maximum allowable power dissipation will result in excessive die temperature, and the regulator will go into thermal shutdown

2: Devices are ESD sensitive. Handling precautions are recommended. Human body model, 1.5 kΩ in series with 100 pF.

TABLE 1-1: ELECTRICAL CHARACTERISTICS (Note 1)

Electrical Characteristics: V_{IN} = 3.6V, V_{OUT} = 5V, C_{IN} = 4.7 µF, C_{OUT} = 22 µF, L = 1 µH T_A = 25°C, bold values are valid for –40°C ≤ T_J ≤ +125°C Unless otherwise indicated.

Parameters	Sym.	Min.	Typ.	Max.	Units	Conditions
Power Supply						
Supply Voltage Range	V_{IN}	**2.5**	—	**5.5**	V	—
UVLO Rising Threshold	V_{UVLOR}	—	2.32	**2.49**	V	—
UVLO Hysteresis	V_{UVLOH}	—	200	—	mV	—
Quiescent Current	I_{VIN}	—	1	—	mA	Operating at minimum switching frequency
V_{IN} Shutdown Current	I_{VINSD}	—	1	**3**	µA	V_{EN} = 0V, V_{IN} = 5.5V, V_{OUT} = 0V
V_{OUT} Shutdown Current	I_{VOUTSD}	—	2	**5**	µA	V_{EN} = 0V, V_{IN} = 0.3V, V_{OUT} = 5.5V
Output Voltage	V_{OUT}	V_{IN}	—	5.5	V	—
Feedback Voltage	V_{FB}	**0.8865**	**0.9**	**0.9135**	V	Adjustable version, I_{OUT} = 0A
Voltage Accuracy	—	**–1.5**	—	**+1.5**	%	Fixed version, I_{OUT} = 0A
Line Regulation	—	—	0.3	—	%/V	2.5V < V_{IN} < 4.5V, I_{OUT} = 500 mA
Load Regulation	—	—	0.2	—	%/A	I_{OUT} = 200 mA to 1200 mA
Maximum Duty Cycle	D_{MAX}	—	92	—	%	—
Minimum Duty Cycle	D_{MIN}	—	6.5	—	%	—
Low-side Switch Current Limit	I_{LS}	3.8	4.8	5.8	A	V_{IN} = 2.5V
Switch On-Resistance	PMOS	—	79	—	mΩ	V_{IN} = 3.0V, I_{SW} = 200 mA, V_{OUT} = 5.0V
	NMOS	—	82	—	mΩ	V_{IN} = 3.0V, I_{SW} = 200 mA, V_{OUT} = 5.0V
Switch Leakage Current (Note 2)	I_{SW}	—	0.2	**5**	µA	V_{EN} = 0V, V_{IN} = 5.5V
Minimum Switching Frequency	F_{SWMIN}	—	45	—	kHz	I_{OUT} = 0 mA
Oscillator Frequency	F_{OSC}	**1.6**	2	**2.4**	MHz	—
Overtemperature Shutdown Threshold	T_{SD}	—	155	—	°C	—
Overtemperature Shutdown Hysteresis		—	15	—		—
Soft-Start						
Soft-Start Time	T_{SS}	—	1.1	—	ms	V_{OUT} = 5.0V

Note 1: Specification for packaged product only.

2: Guaranteed by design and characterization.

© 2015 Microchip Technology Inc.

TABLE 1-1: ELECTRICAL CHARACTERISTICS (CONTINUED)(Note 1)

Electrical Characteristics: V_{IN} = 3.6V, V_{OUT} = 5V, C_{IN} = 4.7 µF, C_{OUT} = 22 µF, L = 1 µH T_A = 25°C, bold values are valid for –40°C ≤ T_J ≤ +125°C Unless otherwise indicated.						
Parameters	**Sym.**	**Min.**	**Typ.**	**Max.**	**Units**	**Conditions**
EN, /PG Control Pins						
EN Threshold Voltage	V_{EN}	**1.5**	—	—	V	Boost converter and chip logic ON
		—	—	**0.4**		Boost converter and chip logic OFF
EN Pin Current	—	—	1.5	**3**	µA	V_{IN} = V_{EN} = 3.6V
Power-Good Threshold (Rising)	$V_{/PG-THR}$	—	0.90 × V_{OUT}	—	V	—
Power-Good Threshold (Falling)	$V_{/PG-THF}$	—	0.83 × V_{OUT}	—	V	—

Note 1: Specification for packaged product only.

2: Guaranteed by design and characterization.

TEMPERATURE SPECIFICATIONS (Note 1)

Parameters	Sym.	Min.	Typ.	Max.	Units	Conditions
Temperature Ranges						
Lead Temperature	—	—	260	—	°C	Soldering 10s
Storage Temperature Range	T_S	–65	—	+150	°C	—
Junction Operating Temperature	T_J	–40	—	+125	°C	—
Package Thermal Resistances						
Thermal Resistance, TDFN-22-8Ld	θ_{JA}	—	90	—	°C/W	—

Note 1: The maximum allowable power dissipation is a function of ambient temperature, the maximum allowable junction temperature and the thermal resistance from junction to air (i.e., T_A, T_J, θ_{JA}). Exceeding the maximum allowable power dissipation will cause the device operating junction temperature to exceed the maximum +125°C rating. Sustained junction temperatures above +125°C can impact the device reliability.

© 2015 Microchip Technology Inc.

2.0 TYPICAL PERFORMANCE CURVES

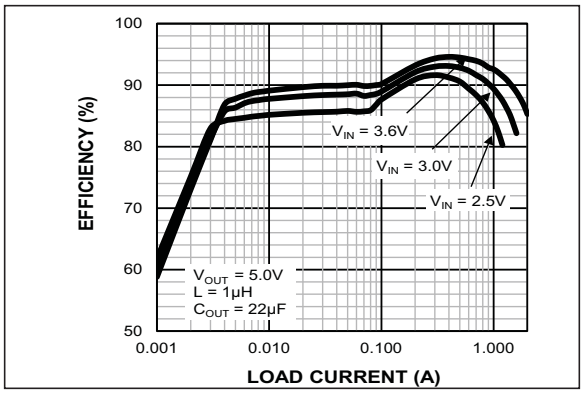

FIGURE 2-1: *Efficiency vs. Load Current.*

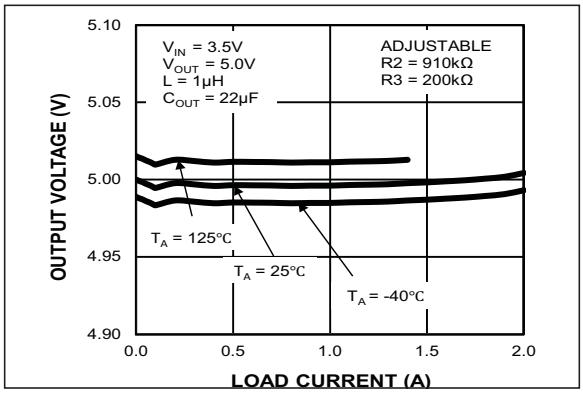

FIGURE 2-2: *Output Voltage vs. Load Current.*

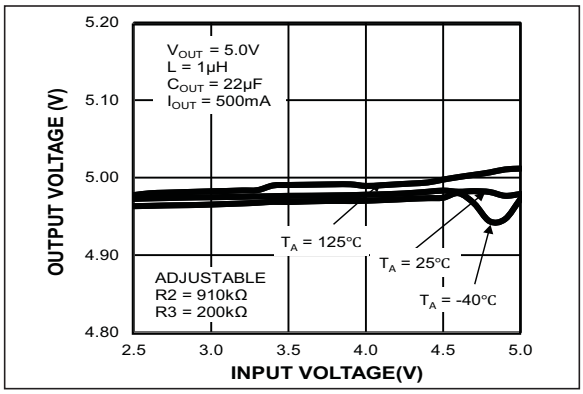

FIGURE 2-3: *Output Voltage vs. Input Voltage.*

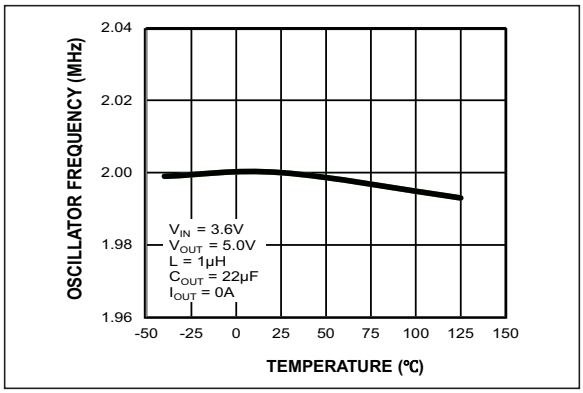

FIGURE 2-4: *Oscillator Frequency vs. Temperature.*

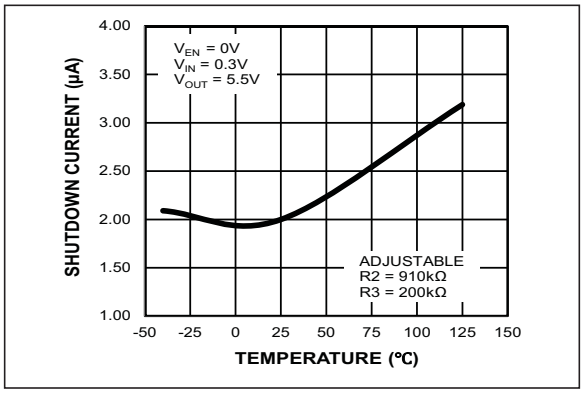

FIGURE 2-5: *Output Shutdown Current vs. Temperature.*

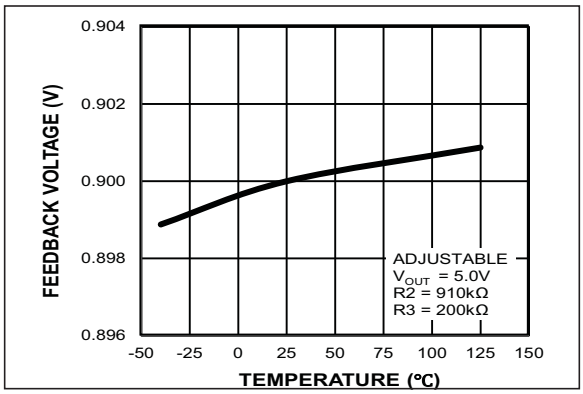

FIGURE 2-6: *Feedback Voltage vs. Temperature.*

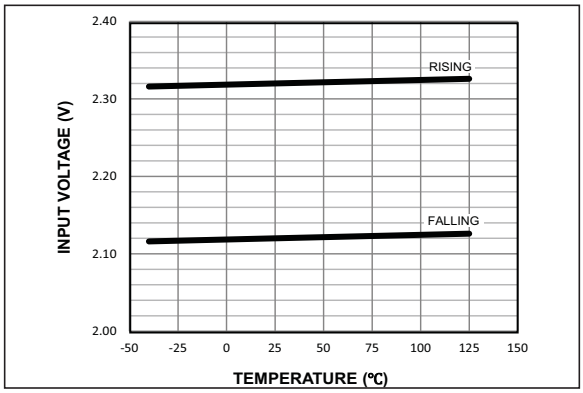

FIGURE 2-7: *UVLO Threshold vs. Temperature.*

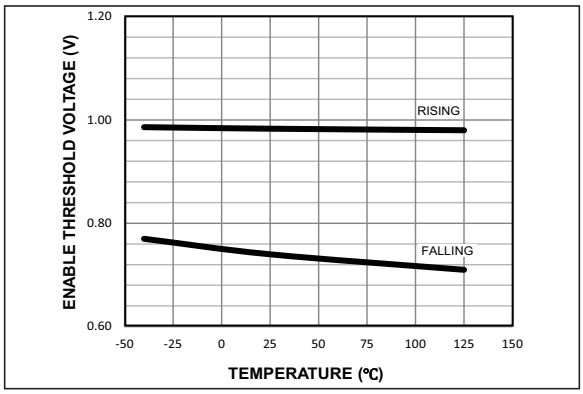

FIGURE 2-8: *Enable Threshold vs. Temperature.*

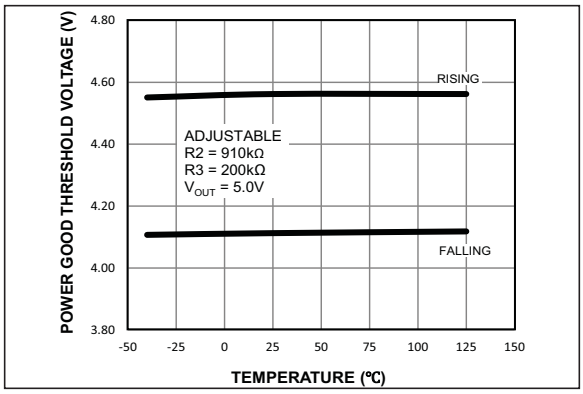

FIGURE 2-9: *Power Good Threshold vs. Temperature.*

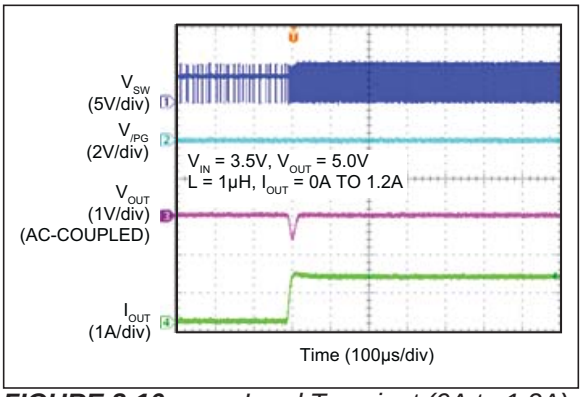

FIGURE 2-10: *Load Transient (0A to 1.2A).*

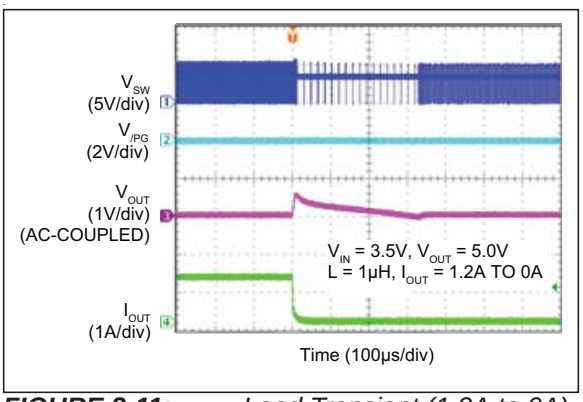

FIGURE 2-11: *Load Transient (1.2A to 0A).*

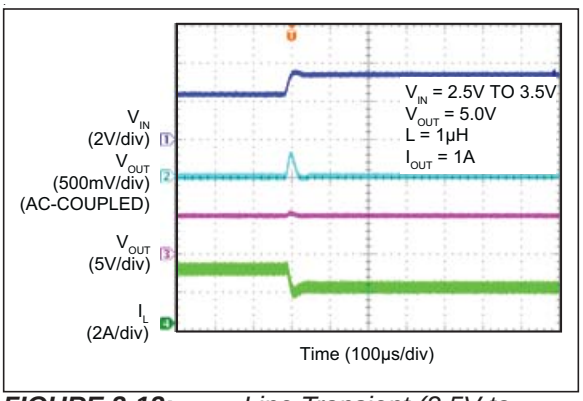

FIGURE 2-12: *Line Transient (2.5V to 3.5V).*

© 2015 Microchip Technology Inc.

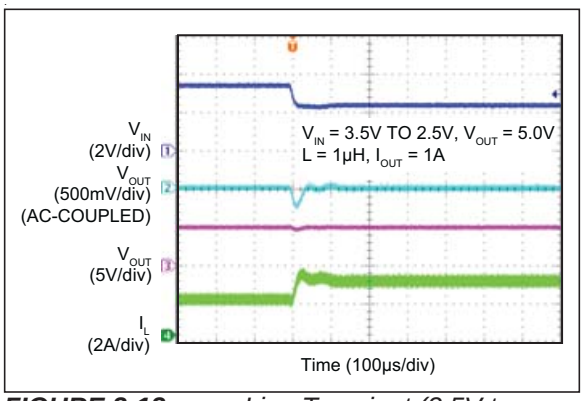

FIGURE 2-13: *Line Transient (3.5V to 2.5V).*

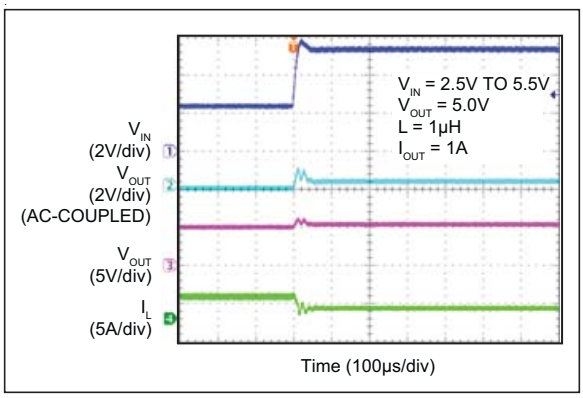

FIGURE 2-14: *Line Transient (2.5V to 5.5V).*

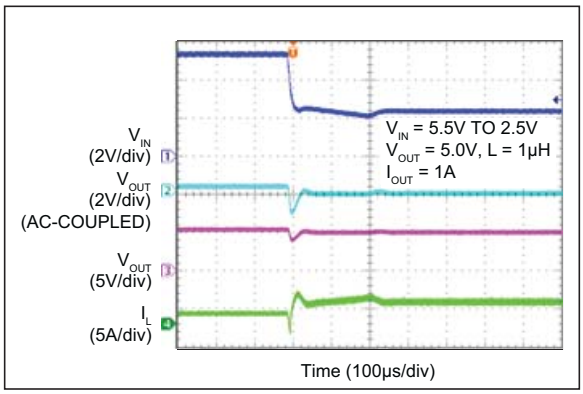

FIGURE 2-15: *Line Transient (5.5V to 2.5V).*

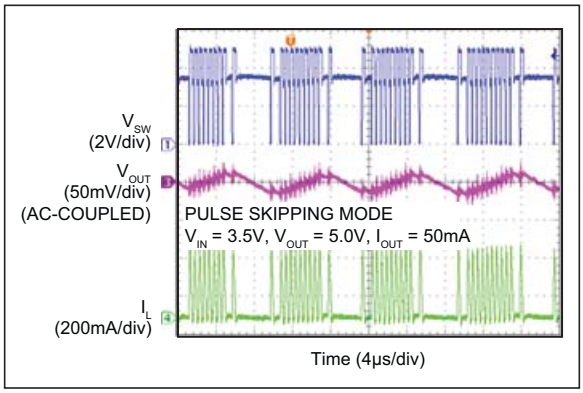

FIGURE 2-16: *Output Ripple (Pulse Skipping Mode).*

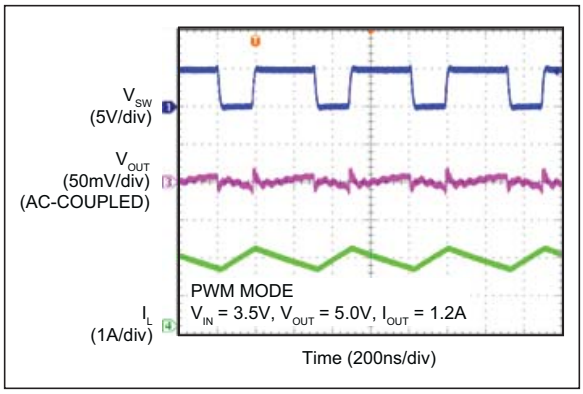

FIGURE 2-17: Output Ripple (PWM Mode).

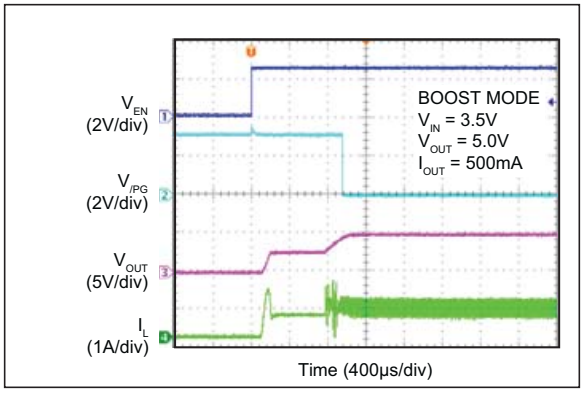

FIGURE 2-18: Soft–Start (Boost Mode).

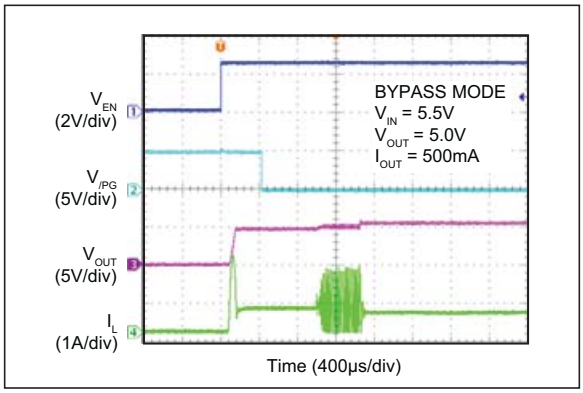

FIGURE 2-19: *Soft–Start Bypass Mode.*

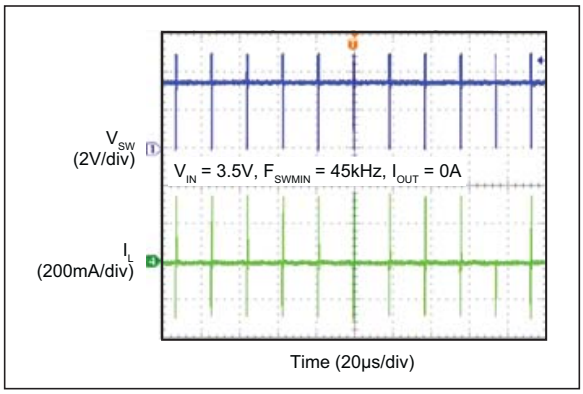

FIGURE 2-20: *Minimum Switching.*

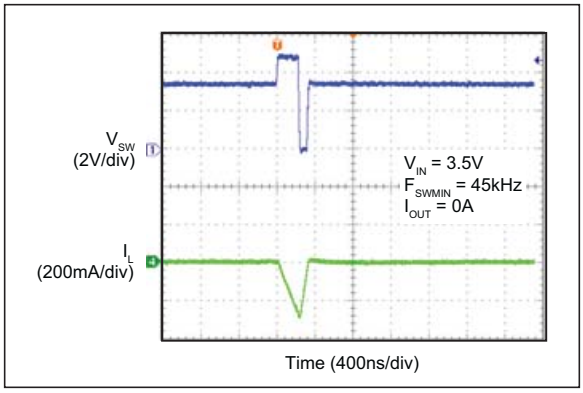

FIGURE 2-21: *Minimum Switching (Zoom–In).*

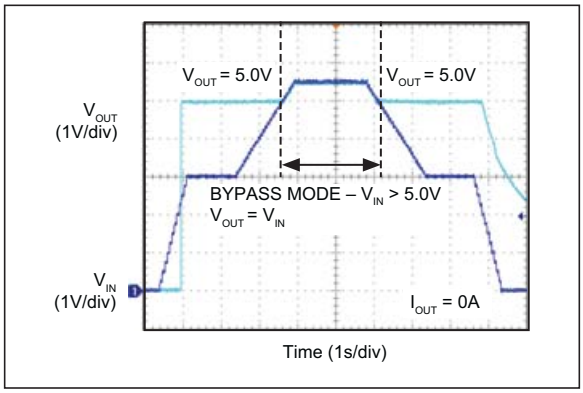

FIGURE 2-22: *Bypass mode.*

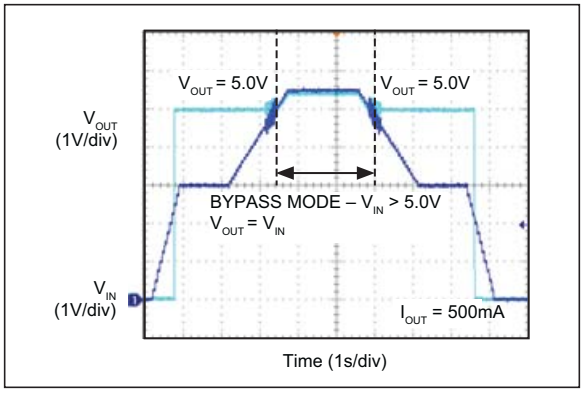

FIGURE 2-23: *Bypass Mode.*

© 2015 Microchip Technology Inc.

3.0 PIN DESCRIPTIONS

The descriptions of the pins are listed in Table 3-1.

TABLE 3-1: PIN FUNCTION TABLE

Pin Number Fixed Output	Pin Number Adj. Output	Pin Name	Description
1	1	SW	Boost Converter Switch Node: Connect the inductor between IN and SW pins.
2	2	PGND	Power Ground: The power ground for the synchronous boost DC/DC converter power stage.
3	3	IN	Supply Input: Connect at least 1 µF ceramic capacitor between IN and AGND pins.
4	4	AGND	Analog Ground: The analog ground for the regulator control loop.
5	—	OUTS	Output Voltage Sense Pin: For output voltage regulation in fixed voltage version. Connect to the boost converter output.
—	5	FB	Feedback Pin: For output voltage regulation in adjustable version. Connect to the feedback resistor divider.
6	6	EN	Boost Converter Enable: When this pin is driven low, the IC enters shutdown mode. The EN pin has an internal 2.5 MΩ pull-down resistor. The output is disabled when this pin is left floating.
7	7	/PG	Open Drain Power Good Output (Active Low): The /PG pin is high impedance when the output voltage is below the power good threshold and becomes low once the output is above the power good threshold. The /PG pin has a typical $R_{DS(ON)}$ = 90Ω and requires a pull up resistor of 1 MΩ. Connect /PG pin to AGND when the /PG signal is not used.
8	8	OUT	Boost Converter Output.
EP	EP	ePad	Exposed Heat Sink Pad. Connect to AGND for best thermal performance.

© 2015 Microchip Technology Inc.

4.0 FUNCTIONAL DESCRIPTION

4.1 Input (IN)

The input supply provides power to the internal MOSFETs gate drivers and control circuitry for the boost regulator. The operating input voltage range is from 2.5V to 5.5V. A 1 µF low-ESR ceramic input capacitor should be connected from IN to AGND as close to MIC2875 as possible to ensure a clean supply voltage for the device. A minimum voltage rating of 10V is recommended for the input capacitor.

4.2 Switch Node (SW)

The MIC2875 has internal low-side and synchronous MOSFET switches. The switch node (SW) between the internal MOSFET switches connects directly to one end of the inductor and provides the current path during switching cycles. The other end of the inductor is connected to the input supply voltage. Due to the high-speed switching on this pin, the switch node should be routed away from sensitive nodes wherever possible.

4.3 Ground Path (AGND)

The ground path (AGND) is for the internal biasing and control circuitry. AGND should be connected to the PCB pad for the package exposed pad. The current loop of the analog ground should be separated from that of the power ground (PGND). AGND should be connected to PGND and EP at a single point.

4.4 Power Ground (PGND)

The power ground (PGND) is the ground path for the high current in the boost switches. The current loop for the power ground should be as short as possible and separate from the AGND loop as applicable.

4.5 Boost Converter Output (OUT)

A low-ESR ceramic capacitor of 22 µF (for operation with VIN ≤ 5.0V), or 66 µF (for operation with V_{IN} > 5.0V) should be connected from V_{OUT} to PGND as close as possible to the MIC2875. A minimum voltage rating of 10V is recommended for the output capacitor.

4.6 Enable (EN)

Enable pin of the MIC2875. A logic high on this pin enables the MIC2875. When this pin is driven low, the MIC2875 enters the shutdown mode. When the EN pin is left floating, it is pulled-down internally by a built-in 2.5 MΩ resistor.

4.7 Feedback/Output Voltage Sense (FB/OUTS)

Feedback or output voltage sense pin for the boost converter. For the fixed voltage version, this pin should be connected to the OUT pin. For the adjustable version, connect a resistor divider to set the output voltage (see "**Section 5.7 "Output Voltage Programming"**" for more information).

4.8 Power Good Output (/PG)

The open-drain active-low power-good output (/PG) is low when the output voltage is above the power-good threshold. A pull-up resistor of 1 MΩ is recommended.

4.9 Exposed Heat Sink Pad (EP)

The exposed heat sink pad, or ePad (EP), should be connected to AGND for best thermal performance.

© 2015 Microchip Technology Inc.

5.0 APPLICATION INFORMATION

5.1 General Description

The MIC2875 is a 2 MHz, current-mode, PWM, synchronous boost converter with an operating input voltage range of 2.5V to 5.5V. At light load, the converter enters pulse-skipping mode to maintain high efficiency over a wide range of load current. The maximum peak current in the boost switch is limited to 4.8A (typical).

5.2 Bi-Directional Output Disconnect

The power stage of the MIC2875 consists of a NMOS transistor as the main switch and a PMOS transistor as the synchronous rectifier. A control circuit turns off the back gate diode of the PMOS to isolate the output from the input supply when the chip is disabled (V_{EN} = 0V). An “always on” maximum supply selector switches the cathode of the back-gate diode to either the IN or the OUT (whichever of the two has the higher voltage). As a result, the output of the MIC2875 is bi-directionally isolated from the input as long as the device is disabled. The maximum supply selector and hence the output disconnect function requires only 0.3V at the IN pin to operate.

5.3 Minimum Switching Frequency

When the MIC2875 enters the pulse-skipping mode for more than 20 µs, an internal control circuitry forces the PMOS to turn on briefly to discharge V_{OUT} to V_{IN} through the inductor. When the inductor current reaches a predetermined threshold, the PMOS is turned off and the NMOS is turned on so that the inductor current can decrease gradually. Once the inductor current reaches zero, the NMOS is eventually turned off. The above cycle repeats if there is no switching activity for another 20 µs, effectively maintaining a minimum switching frequency of 45 kHz. The frequency control circuit is disabled when V_{OUT} is less than or within 200 mV of V_{IN}. This minimum switching frequency feature is advantageous for applications that are sensitive to low-frequency EMI, such as audio systems.

5.4 Integrated Anti-Ringing Switch

The MIC2875 includes an anti-ringing switch that eliminates the ringing on the SW node of a conventional boost converter operating in the discontinuous conduction mode (DCM). At the end of a switching cycle during DCM operation, both the NMOS and PMOS are turned off. The anti-ringing switch in the MIC2875 clamps the SW pin voltage to IN to dissipate the remaining energy stored in the inductor and the parasitic elements of the power switches.

5.5 Automatic Bypass Mode (when $V_{IN} > V_{OUT}$)

The MIC2875 automatically operates in bypass mode when the input voltage is higher than the target output voltage. In bypass mode, the NMOS is turned off while the PMOS is fully turned-on to provide a very low impedance path from IN to OUT.

5.6 Soft-Start

The MIC2875 integrates an internal soft-start circuit to limit the inrush current during start-up. When the device is enabled, the PMOS is turned-on slowly to charge the output capacitor to a voltage close to the input voltage. Then, the device begins boost switching cycles to gradually charge up the output voltage to the target V_{OUT}.

5.7 Output Voltage Programming

The MIC2875 has an adjustable version that allows the output voltage to be set by an external resistor divider R2 and R3. The typical feedback voltage is 900 mV, the recommended maximum and minimum output voltage is 5.5V and 3.2V, respectively. The current through the resistor divider should be significantly larger than the current into the FB pin (typically 0.01 µA). It is recommended that 0.1% tolerance feedback resistors must be used and the total resistance of R2 + R3 should be around 1 MΩ. The appropriate R2 and R3 values for the desired output voltage are calculated as in Equation 5-1:

EQUATION 5-1:

$$R2 = R3 \times \left(\frac{V_{OUT}}{0.9V} - 1\right)$$

5.8 Current Limit Protection

The MIC2875 has a current limit feature to protect the part against heavy loading condition. When the current limit comparator determines that the NMOS switch has a peak current higher than 4.8A, the NMOS is turned off and the PMOS is turned on until the next switching cycle. The overcurrent protection is reset cycle by cycle

© 2015 Microchip Technology Inc.

6.0 COMPONENT SELECTION

6.1 Inductor

Inductor selection is a trade-off between efficiency, stability, cost, size, and rated current. Because the boost converter is compensated internally, the recommended inductance is limited from 1 µH to 2.2 µH to ensure system stability and presents a good balance between these considerations.

A large inductance value reduces the peak-to-peak inductor ripple current hence the output ripple voltage. This also reduces both the DC loss and the transition loss at the same inductor's DC resistance (DCR). However, the DCR of an inductor usually increases with the inductance in the same package size. This is due to the longer windings required for an increase in inductance. Since the majority of the input current passes through the inductor, the higher the DCR the lower the efficiency is, and more significantly at higher load currents. On the other hand, inductor with smaller DCR but the same inductance usually has a larger size. The saturation current rating of the selected inductor must be higher than the maximum peak inductor current to be encountered and should be at least 20% to 30% higher than the average inductor current at maximum output current.

6.2 Input Capacitor to the Device Supply

A ceramic capacitor of 1 µF or larger with low ESR is recommended to reduce the input voltage ripple to ensure a clean supply voltage for the device. The input capacitor should be placed as close as possible to the MIC2875 IN pin and AGND pin with short traces to ensure good noise performance. X5R or X7R type ceramic capacitors are recommended for better tolerance over temperature. The Y5V and Z5U type temperature rating ceramic capacitors are not recommended due to their large reduction in capacitance over temperature and increased resistance at high frequencies. The use of these reduces the ability to filter out high-frequency noise. The rated voltage of the input capacitor should be at least 20% higher than the maximum operating input voltage over the operating temperature range.

6.3 Input Capacitor to the Power Path

A ceramic capacitor of a 4.7 µF of larger with low ESR is recommended to reduce the input voltage fluctuation at the voltage supply of the high current power path. An input capacitor should be placed close to the V_{IN} supply to the power inductor and PGND for good device performance at heavy load condition. X5R or X7R type ceramic capacitors are recommended for better tolerance overtemperature.

The Y5V and Z5U type temperature rating ceramic capacitors are not recommended due to their large reduction in capacitance over temperature and increased resistance at high frequencies. These reduce their ability to filter out high-frequency noise. The rated voltage of the input capacitor should be at least 20% higher than the maximum operating input voltage over the operating temperature range.

6.4 Output Capacitor

Output capacitor selection is also a trade-off between performance, size, and cost. Increasing output capacitor will lead to an improved transient response, however, the size and cost also increase. For operation with $V_{IN} \leq 5.0V$, a minimum of 22 µF output capacitor with ESR less than 10 mΩ is required. For operation with $V_{IN} > 5.0V$, a minimum of 66 µF output capacitor with ESR less than 10 mΩ is required. X5R or X7R type ceramic capacitors are recommended for better tolerance over temperature. Additional capacitors can be added to improve the transient response, and to reduce the ripple of the output when the MIC2875 operates in and out of bypass mode.

The Y5V and Z5U type ceramic capacitors are not recommended due to their wide variation in capacitance over temperature and increased resistance at high frequencies. The rated voltage of the output capacitor should be at least 20% higher than the maximum operating output voltage over the operating temperature range. 0805 size ceramic capacitor is recommended for smaller ESL at output capacitor which contributes smaller voltage spike at the output voltage of high-frequency switching boost converter.

© 2015 Microchip Technology Inc.

7.0 POWER DISSIPATION

As with all power devices, the ultimate current rating of the output is limited by the thermal properties of the device package and the PCB on which the device is mounted. There is a simple, Ohm's law-type relationship between thermal resistance, power dissipation, and temperature which are analogous to an electrical circuit (see Figure 7-1):

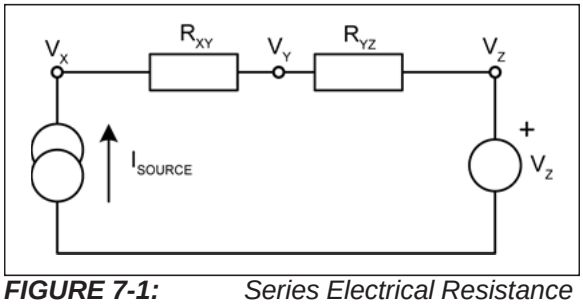

FIGURE 7-1: *Series Electrical Resistance Circuit.*

From this simple circuit we can calculate V_X if we know I_{SOURCE}, V_Z, and the resistor values, R_{XY} and R_{YZ} using Equation 7-1:

EQUATION 7-1:

$$V_X = I_{SOURCE} \times (R_{XY} + R_{YZ}) + V_Z$$

Thermal circuits can be considered using this same rule and can be drawn similarly by replacing current sources with power dissipation (in watts), resistance with thermal resistance (in °C/W) and voltage sources with temperature (in °C).

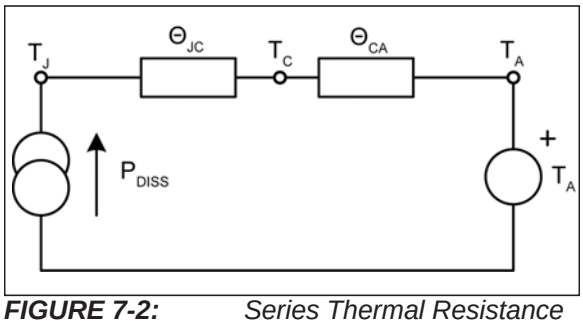

FIGURE 7-2: *Series Thermal Resistance Circuit.*

Now replacing the variables in the equation for V_X, we can find the junction temperature (T_J) from the power dissipation, ambient temperature and the known thermal resistance of the PCB (θ_{CA}) and the package (θ_{JC}).

EQUATION 7-2:

$$T_J = P_{DISS} \times (\theta_{JC} + \theta_{CA}) + T_A$$

As can be seen in the diagram, total thermal resistance $\theta_{JA} = \theta_{JC} + \theta_{CA}$. This can also be written as in Equation 7-3:

EQUATION 7-3:

$$T_J = P_{DISS} \times (\theta_{JA}) + T_A$$

Given that all of the power losses (minus the inductor losses) are effectively in the converter are dissipated within the MIC2875 package, P_{DISS} can be calculated thusly:

EQUATION 7-4: LINEAR MODE

$$P_{DISS} = \left[P_{OUT} \times \left(\frac{1}{\eta} - 1\right)\right] - I_{OUT}^{2} \times DCR$$

EQUATION 7-5: BOOST MODE

$$P_{DISS} = \left[P_{OUT} \times \left(\frac{1}{\eta} - 1\right)\right] - \left(\frac{I_{OUT}}{1 - D}\right)^{2} \times DCR$$

EQUATION 7-6: DUTY CYCLE (BOOST)

$$D + \frac{V_{OUT} - V_{IN}}{V_{OUT}}$$

In the equations above, η is the efficiency taken from the efficiency curves and DCR represents the inductor DCR. θ_{JC} and θ_{JA} are found in the temperature specifications section of the data sheet.

Where the real board area differs from 1" square, θ_{CA} (the PCB thermal resistance), values for various PCB copper areas can be taken from Figure 7-3.

© 2015 Microchip Technology Inc.

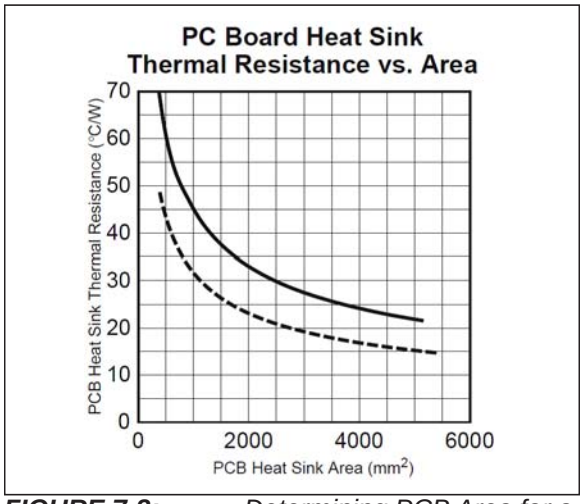

FIGURE 7-3: *Determining PCB Area for a Given PCB Thermal Resistance.*

Figure 7-3 shows the total area of a round or square pad, centered on the device. The solid trace represents the area of a square, single-sided, horizontal, solder masked, copper PC board trace heat sink, measured in square millimeters. No airflow is assumed. The dashed line shows the PC board's trace heat sink covered in black oil-based paint and with 1.3 m/sec (250 feet per minute) airflow. This approaches a "best case" pad heat sink. Conservative design dictates using the solid trace data, which indicates that a maximum pad size of 5000 mm^2 is needed. This is a pad 71 mm × 71 mm (2.8 inches per side).

© 2015 Microchip Technology Inc.

8.0 PCB LAYOUT GUIDELINES

PCB layout is critical to achieve reliable, stable and efficient performance. A ground plane is required to control EMI and minimize the inductance in power, signal and return paths. The following guidelines should be followed to ensure proper operation of the device. Please refer to the MIC2875 evaluation board document for the recommended components placement and layouts.

8.1 Integrated Circuit (IC)

- Place the IC close to the point-of-load.
- Use fat traces to route the input and output power lines.
- Analog grounds and power ground should be kept separate and connected at a single location at the PCB pad for exposed pad of the IC.
- Place as much as thermal vias on the PCB pad for exposed pad and connected it to the ground plane to ensure a good PCB thermal resistance can be achieved.

8.2 IN Decoupling Capacitor

- The IN decoupling capacitor must be placed close to the IN pin of the IC and preferably connected directly to the pin and not through any via. The capacitor must be located right at the IC.
- The IN decoupling capacitor should be connected as close as possible to AGND.
- The IN terminal is noise sensitive and the placement of capacitor is very critical.

8.3 V_{IN} Power Path Bulk Capacitor

- The V_{IN} power path bulk capacitor should be placed and connected close to the V_{IN} supply to the power inductor and the PGND of the IC.
- Use either X5R or X7R temperature rating ceramic capacitors. Do not use Y5V or Z5U type ceramic capacitors.

8.4 Inductor

- Keep both the inductor connections to the switch node (SW) and input power line short and wide enough to handle the switching current. Keep the areas of the switching current loops small to minimize the EMI problem.
- Do not route any digital lines underneath or close to the inductor.
- Keep the switch node (SW) away from the noise sensitive pins.
- To minimize noise, place a ground plane underneath the inductor.

8.5 Output Capacitor

- Use wide and short traces to connect the output capacitor as close as possible to the OUT and PGND pins without going through via holes to minimize the switching current loop during the main switch off cycle and the switching noise.
- Use either X5R or X7R temperature rating ceramic capacitors. Do not use Y5V or Z5U type ceramic capacitors.

© 2015 Microchip Technology Inc.

9.0 PACKAGING INFORMATION

8-Lead TDFN 2 mm x 2 mm Package Outline and Recommended Land Pattern

Note: For the most current package drawings, please see the Microchip Packaging Specification located at http://www.microchip.com/packaging

TITLE
8 LEAD TDFN 2x2mm PACKAGE OUTLINE & RECOMMENDED LAND PATTERN

DRAWING #	TDFN22-8LD-PL-1	UNIT	MM

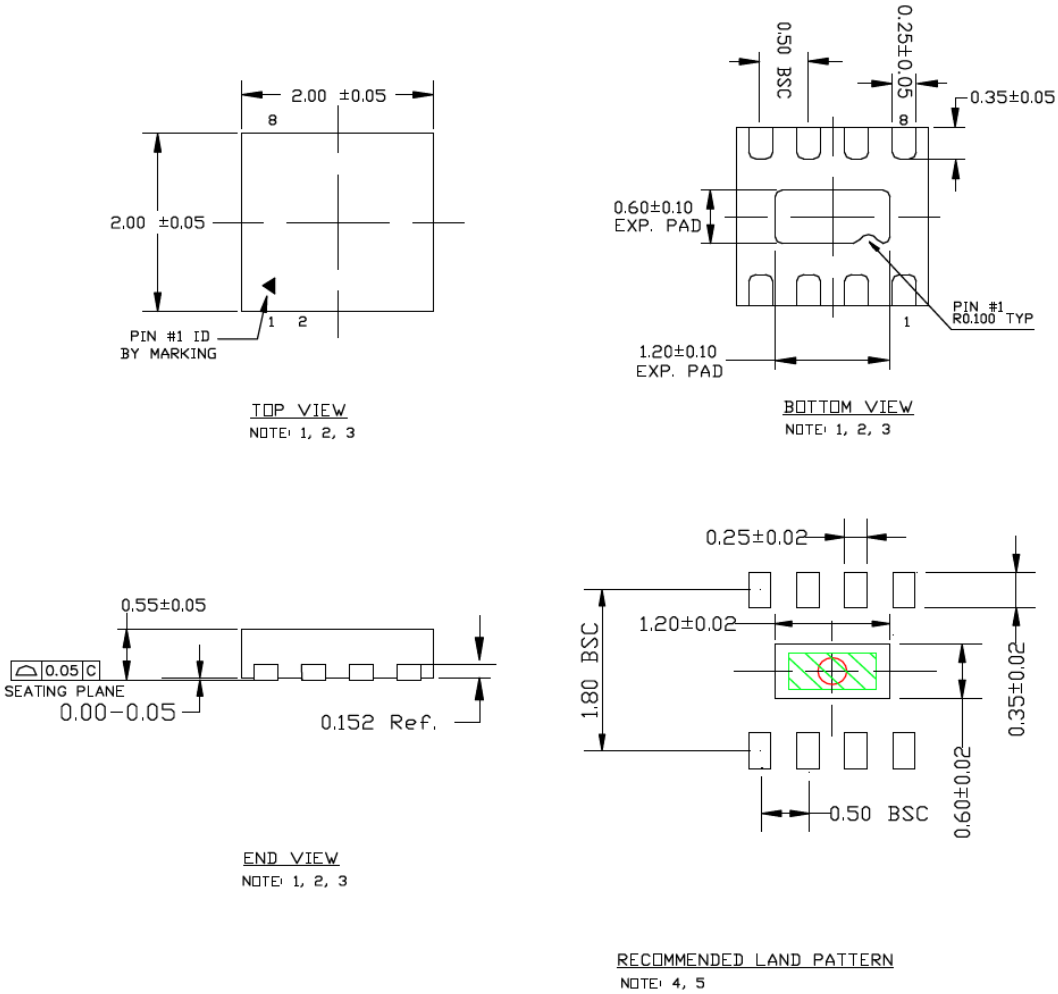

NOTE:
1. MAX PACKAGE WARPAGE IS 0.05 MM
2. MAX ALLOWABLE BURR IS 0.076MM IN ALL DIRECTIONS
3. PIN #1 IS ON TOP WILL BE LASER MARKED
4. RED CIRCLE IN LAND PATTERN REPRESENTS THERMAL VIA. SIZE SHOULD BE 0.30-0.3 MM IN DIAMETER AND SHOULD BE CONNECTED TO GND FOR MAX THERMAL PERFORMANCE
5. GREEN RECTANGLES (SHADED AREA) REPRESENTS SOLDER STENCIL OPENING ON EXPOSED PAD AREA. SIZE SHOULD BE 0.40x0.90 MM.

© 2015 Microchip Technology Inc.

APPENDIX A: REVISION HISTORY

Revision A (May 2016)

- Converted Micrel document DSC2875 to Microchip data sheet template DS20005549A.
- •Minor text changes throughout.

NOTES:

© 2015 Microchip Technology Inc.

PRODUCT IDENTIFICATION SYSTEM

To order or obtain information, e.g., on pricing or delivery, contact your local Microchip representative or sales office.

PART NO.	–	XX	X	XX
Device		Output Voltage	Temperature	Package

Device:	MIC2875:	4.8A I_{SW}, Synchronous Boost Regulator with Bi-Directional Load Disconnect
Output Voltage:	4.75 = 4.75V 5.0 = 5.00V 5.25 = 5.25V 5.5 = 5.50V A = Adjustable	
Temperature:	Y = –40°C to +125°C	
Package:	MT = 8-Pin 2 mm x 2 mm TDFN (Note 1)	

Note 1: Thin DFN is an RoHS-compliant package. Lead finish is Pb-free and Matte Tin. Mold compound is Halogen free.
▲ = TDFN Pin 1 identifier

Examples:

a) MIC2875-4.75YMT: 4.8A I_{SW}, Synchronous Boost Regulator with Bi-Directional Load Disconnect, 4.75V Output Voltage, –40°C to +125°C Temp. Range, 8-Pin TDFN

b) MIC2875-5.0YMT: 4.8A I_{SW}, Synchronous Boost Regulator with Bi-Directional Load Disconnect, 5.00V Output Voltage, –40°C to +125°C Temp. Range, 8-Pin TDFN

c) MIC2875-5.25YMT: 4.8A I_{SW}, Synchronous Boost Regulator with Bi-Directional Load Disconnect, 5.25V Output Voltage, –40°C to +125°C Temp. Range, 8-Pin TDFN

d) MIC2875-5.5YMT: 4.8A I_{SW}, Synchronous Boost Regulator with Bi-Directional Load Disconnect, 5.50V Output Voltage, –40°C to +125°C Temp. Range, 8-Pin TDFN

e) MIC2875-AYMT: 4.8A I_{SW}, Synchronous Boost Regulator with Bi-Directional Load Disconnect, Adjustable Output Voltage, –40°C to +125°C Temp. Range, 8-Pin TDFN

© 2016 Microchip Technology Inc.

NOTES:

© 2016 Microchip Technology Inc.

Note the following details of the code protection feature on Microchip devices:

- Microchip products meet the specification contained in their particular Microchip Data Sheet.
- Microchip believes that its family of products is one of the most secure families of its kind on the market today, when used in the intended manner and under normal conditions.
- There are dishonest and possibly illegal methods used to breach the code protection feature. All of these methods, to our knowledge, require using the Microchip products in a manner outside the operating specifications contained in Microchip's Data Sheets. Most likely, the person doing so is engaged in theft of intellectual property.
- Microchip is willing to work with the customer who is concerned about the integrity of their code.
- Neither Microchip nor any other semiconductor manufacturer can guarantee the security of their code. Code protection does not mean that we are guaranteeing the product as "unbreakable."

Code protection is constantly evolving. We at Microchip are committed to continuously improving the code protection features of our products. Attempts to break Microchip's code protection feature may be a violation of the Digital Millennium Copyright Act. If such acts allow unauthorized access to your software or other copyrighted work, you may have a right to sue for relief under that Act.

Information contained in this publication regarding device applications and the like is provided only for your convenience and may be superseded by updates. It is your responsibility to ensure that your application meets with your specifications. MICROCHIP MAKES NO REPRESENTATIONS OR WARRANTIES OF ANY KIND WHETHER EXPRESS OR IMPLIED, WRITTEN OR ORAL, STATUTORY OR OTHERWISE, RELATED TO THE INFORMATION, INCLUDING BUT NOT LIMITED TO ITS CONDITION, QUALITY, PERFORMANCE, MERCHANTABILITY OR FITNESS FOR PURPOSE**.** Microchip disclaims all liability arising from this information and its use. Use of Microchip devices in life support and/or safety applications is entirely at the buyer's risk, and the buyer agrees to defend, indemnify and hold harmless Microchip from any and all damages, claims, suits, or expenses resulting from such use. No licenses are conveyed, implicitly or otherwise, under any Microchip intellectual property rights unless otherwise stated.

Microchip received ISO/TS-16949:2009 certification for its worldwide headquarters, design and wafer fabrication facilities in Chandler and Tempe, Arizona; Gresham, Oregon and design centers in California and India. The Company's quality system processes and procedures are for its PIC® MCUs and dsPIC® DSCs, KEELOQ® code hopping devices, Serial EEPROMs, microperipherals, nonvolatile memory and analog products. In addition, Microchip's quality system for the design and manufacture of development systems is ISO 9001:2000 certified.

QUALITY MANAGEMENT SYSTEM
CERTIFIED BY DNV
= ISO/TS 16949 =

Trademarks

The Microchip name and logo, the Microchip logo, AnyRate, dsPIC, FlashFlex, flexPWR, Heldo, JukeBlox, KeeLoq, KeeLoq logo, Kleer, LANCheck, LINK MD, MediaLB, MOST, MOST logo, MPLAB, OptoLyzer, PIC, PICSTART, PIC32 logo, RightTouch, SpyNIC, SST, SST Logo, SuperFlash and UNI/O are registered trademarks of Microchip Technology Incorporated in the U.S.A. and other countries.

ClockWorks, The Embedded Control Solutions Company, ETHERSYNCH, Hyper Speed Control, HyperLight Load, IntelliMOS, mTouch, Precision Edge, and QUIET-WIRE are registered trademarks of Microchip Technology Incorporated in the U.S.A.

Analog-for-the-Digital Age, Any Capacitor, AnyIn, AnyOut, BodyCom, chipKIT, chipKIT logo, CodeGuard, dsPICDEM, dsPICDEM.net, Dynamic Average Matching, DAM, ECAN, EtherGREEN, In-Circuit Serial Programming, ICSP, Inter-Chip Connectivity, JitterBlocker, KleerNet, KleerNet logo, MiWi, motorBench, MPASM, MPF, MPLAB Certified logo, MPLIB, MPLINK, MultiTRAK, NetDetach, Omniscient Code Generation, PICDEM, PICDEM.net, PICkit, PICtail, PureSilicon, RightTouch logo, REAL ICE, Ripple Blocker, Serial Quad I/O, SQI, SuperSwitcher, SuperSwitcher II, Total Endurance, TSHARC, USBCheck, VariSense, ViewSpan, WiperLock, Wireless DNA, and ZENA are trademarks of Microchip Technology Incorporated in the U.S.A. and other countries.

SQTP is a service mark of Microchip Technology Incorporated in the U.S.A.

Silicon Storage Technology is a registered trademark of Microchip Technology Inc. in other countries.

GestIC is a registered trademarks of Microchip Technology Germany II GmbH & Co. KG, a subsidiary of Microchip Technology Inc., in other countries.

All other trademarks mentioned herein are property of their respective companies.

© 2016, Microchip Technology Incorporated, Printed in the U.S.A., All Rights Reserved.

ISBN: 978-1-5224-0572-6

Worldwide Sales and Service

AMERICAS

Corporate Office
2355 West Chandler Blvd.
Chandler, AZ 85224-6199
Tel: 480-792-7200
Fax: 480-792-7277
Technical Support:
http://www.microchip.com/support
Web Address:
www.microchip.com

Atlanta
Duluth, GA
Tel: 678-957-9614
Fax: 678-957-1455

Austin, TX
Tel: 512-257-3370

Boston
Westborough, MA
Tel: 774-760-0087
Fax: 774-760-0088

Chicago
Itasca, IL
Tel: 630-285-0071
Fax: 630-285-0075

Cleveland
Independence, OH
Tel: 216-447-0464
Fax: 216-447-0643

Dallas
Addison, TX
Tel: 972-818-7423
Fax: 972-818-2924

Detroit
Novi, MI
Tel: 248-848-4000

Houston, TX
Tel: 281-894-5983

Indianapolis
Noblesville, IN
Tel: 317-773-8323
Fax: 317-773-5453

Los Angeles
Mission Viejo, CA
Tel: 949-462-9523
Fax: 949-462-9608

New York, NY
Tel: 631-435-6000

San Jose, CA
Tel: 408-735-9110

Canada - Toronto
Tel: 905-673-0699
Fax: 905-673-6509

ASIA/PACIFIC

Asia Pacific Office
Suites 3707-14, 37th Floor
Tower 6, The Gateway
Harbour City, Kowloon

Hong Kong
Tel: 852-2943-5100
Fax: 852-2401-3431

Australia - Sydney
Tel: 61-2-9868-6733
Fax: 61-2-9868-6755

China - Beijing
Tel: 86-10-8569-7000
Fax: 86-10-8528-2104

China - Chengdu
Tel: 86-28-8665-5511
Fax: 86-28-8665-7889

China - Chongqing
Tel: 86-23-8980-9588
Fax: 86-23-8980-9500

China - Dongguan
Tel: 86-769-8702-9880

China - Hangzhou
Tel: 86-571-8792-8115
Fax: 86-571-8792-8116

China - Hong Kong SAR
Tel: 852-2943-5100
Fax: 852-2401-3431

China - Nanjing
Tel: 86-25-8473-2460
Fax: 86-25-8473-2470

China - Qingdao
Tel: 86-532-8502-7355
Fax: 86-532-8502-7205

China - Shanghai
Tel: 86-21-5407-5533
Fax: 86-21-5407-5066

China - Shenyang
Tel: 86-24-2334-2829
Fax: 86-24-2334-2393

China - Shenzhen
Tel: 86-755-8864-2200
Fax: 86-755-8203-1760

China - Wuhan
Tel: 86-27-5980-5300
Fax: 86-27-5980-5118

China - Xian
Tel: 86-29-8833-7252
Fax: 86-29-8833-7256

ASIA/PACIFIC

China - Xiamen
Tel: 86-592-2388138
Fax: 86-592-2388130

China - Zhuhai
Tel: 86-756-3210040
Fax: 86-756-3210049

India - Bangalore
Tel: 91-80-3090-4444
Fax: 91-80-3090-4123

India - New Delhi
Tel: 91-11-4160-8631
Fax: 91-11-4160-8632

India - Pune
Tel: 91-20-3019-1500

Japan - Osaka
Tel: 81-6-6152-7160
Fax: 81-6-6152-9310

Japan - Tokyo
Tel: 81-3-6880- 3770
Fax: 81-3-6880-3771

Korea - Daegu
Tel: 82-53-744-4301
Fax: 82-53-744-4302

Korea - Seoul
Tel: 82-2-554-7200
Fax: 82-2-558-5932 or
82-2-558-5934

Malaysia - Kuala Lumpur
Tel: 60-3-6201-9857
Fax: 60-3-6201-9859

Malaysia - Penang
Tel: 60-4-227-8870
Fax: 60-4-227-4068

Philippines - Manila
Tel: 63-2-634-9065
Fax: 63-2-634-9069

Singapore
Tel: 65-6334-8870
Fax: 65-6334-8850

Taiwan - Hsin Chu
Tel: 886-3-5778-366
Fax: 886-3-5770-955

Taiwan - Kaohsiung
Tel: 886-7-213-7828

Taiwan - Taipei
Tel: 886-2-2508-8600
Fax: 886-2-2508-0102

Thailand - Bangkok
Tel: 66-2-694-1351
Fax: 66-2-694-1350

EUROPE

Austria - Wels
Tel: 43-7242-2244-39
Fax: 43-7242-2244-393

Denmark - Copenhagen
Tel: 45-4450-2828
Fax: 45-4485-2829

France - Paris
Tel: 33-1-69-53-63-20
Fax: 33-1-69-30-90-79

Germany - Dusseldorf
Tel: 49-2129-3766400

Germany - Karlsruhe
Tel: 49-721-625370

Germany - Munich
Tel: 49-89-627-144-0
Fax: 49-89-627-144-44

Italy - Milan
Tel: 39-0331-742611
Fax: 39-0331-466781

Italy - Venice
Tel: 39-049-7625286

Netherlands - Drunen
Tel: 31-416-690399
Fax: 31-416-690340

Poland - Warsaw
Tel: 48-22-3325737

Spain - Madrid
Tel: 34-91-708-08-90
Fax: 34-91-708-08-91

Sweden - Stockholm
Tel: 46-8-5090-4654

UK - Wokingham
Tel: 44-118-921-5800
Fax: 44-118-921-5820

07/14/15

© 2015 Microchip Technology Inc.