MIC2289C

White LED Driver Internal Schottky Diode and OVP

General Description

The MIC2289C is a PWM (pulse width modulated), boost-switching regulator that is optimized for constant-current white LED driver applications. The MIC2289C features an internal Schottky diode and three levels of output overvoltage protection providing a small size and efficient DC/DC solution that requires only four external components.

To optimize efficiency, the feedback voltage is set to only 95mV. This reduces power dissipation in the current set resistor and allows the lowest total output voltage, hence minimal current draw from the battery.

The MIC2289C implements a constant frequency 1.2MHz PWM control scheme. The high frequency, PWM operation saves board space by reducing external component sizes. The added benefit of the constant frequency PWM scheme in caparison to variable frequency is much lower noise and input ripple injected to the input power source.

The MIC2289C clamps the output voltage in case of open LED conditions, protecting itself and the output capacitor. The MIC2289C is available with three output OVP options of 15V, 24V, and 34V. The different OVP options allow the use of the smallest possible output capacitor with the appropriate voltage rating for a given application.

The MIC2289C is available in low profile 5-pin Thin SOT-23 and 8-pin 2mm × 2mm MLF® package options. The MIC2289C has a junction temperature range of –40°C to +125°C.

Data sheets and support documentation can be found on Micrel's web site at www.micrel.com.

Features

- 2.5V to 10V input voltage
- Output voltage up to 34V
- Internal Schottky diode
- 15V, 24V, 34V output OVP options
- 1.2 MHz PWM operation
- Over 500mA switch current
- 95mV feedback voltage
- <1% line and load regulation
- <1µA shutdown current
- Overtemperature protection
- UVLO
- 2mm × 2mm 8-pin MLF® package
- –40°C to +125°C junction temperature range
- For higher performance specifications see the MIC2289

Applications

- White LED driver for backlighting:
  - Cell phones
  - PDAs
  - GPS systems
  - Digital cameras
  - MP3 players
  - IP phones
- LED flashlights
- Constant current power supplies

Typical Application

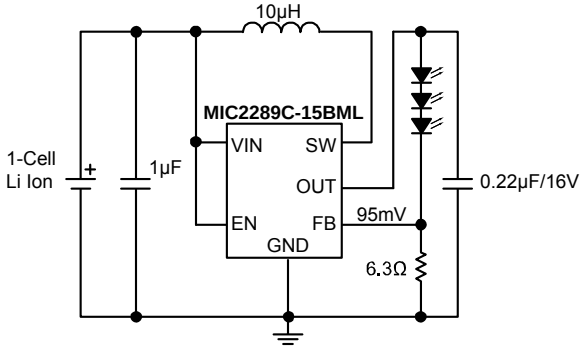

3-Series White LED Driver

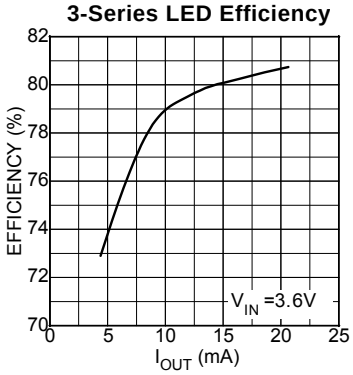

MLF and *Micro*LeadFrame are registered trademarks of Amkor Technology, Inc.

Ordering Information

Part Number	Marking Code	Overoltage Protection	Junction Temp. Range	Package	Lead Finish
MIC2289CBD5	SGAA|	N/A	–40°C to +125°C	5-Pin Thin SOT-23	Standard
MIC2289CYD5	SGAA|	N/A	–40°C to +125°C	5-Pin Thin SOT-23	Pb-Free
MIC2289C-15BML	SLA	15V	–40°C to +125°C	8-Pin 2mm x 2mm MLF®	Standard
MIC2289C-15YML	SLA	15V	–40°C to +125°C	8-Pin 2mm x 2mm MLF®	Pb-Free
MIC2289C-24BML	SLB	24V	–40°C to +125°C	8-Pin 2mm x 2mm MLF®	Standard
MIC2289C-24YML	SLB	24V	–40°C to +125°C	8-Pin 2mm x 2mm MLF®	Pb-Free
MIC2289C-34BML	SLC	34V	–40°C to +125°C	8-Pin 2mm x 2mm MLF®	Standard
MIC2289C-34YML	SLC	34V	–40°C to +125°C	8-Pin 2mm x 2mm MLF®	Pb-Free

Note: Marking bars may not be to scale.

Pin Configuration

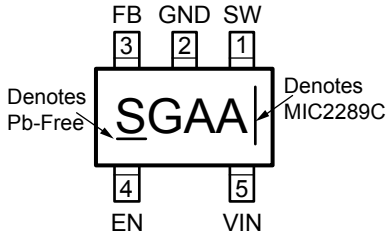

5- Pin Thin SOT-23 (D5)

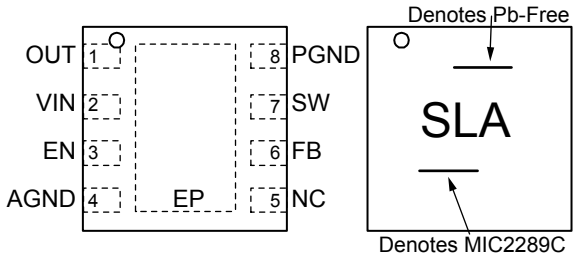

8-Pin MLF® (ML)
(Top View)
Fused Lead Frame

Pin Description

Pin Number TSOT-23-5	Pin Number MLF® -8	Pin Name	Pin Name
1	7	SW	Switch node (Input): Internal power BIPOLAR collector.
2	—	GND	Ground (Return): Ground.
3	6	FB	Feedback (Input): Output voltage sense node. Connect the cathode of the LED to this pin. A resistor from this pin to ground sets the LED current.
4	3	EN	Enable (Input): Logic high enables regulator. Logic low shuts down regulator.
5	2	VIN	Supply (Input): 2.7V to 8V for internal circuitry.
—	1	OUT	Output Pin and Overvoltage Protection (Output): Connect to the output capacitor and LEDs.
—	4	AGND	Analog ground.
—	8	PGND	Power ground.
—	5	NC	No connect (no internal connection to die).
—	EP	GND	Ground (Return): Exposed backside pad.

Absolute Maximum Ratings[1]

Supply Voltage (V_{IN}) 12V
Switch Voltage (V_{SW}) ..... –0.3V to 34V
Enable Pin Voltage (V_{EN}) ..... –0.3V to V_{IN}
FB Voltage (V_{FB}) 6V
Switch Current (I_{SW}) 2A
Ambient Storage Temperature (T_s) ..... –65°C to +150°C
Schottky Reverse Voltage (V_{DA}) 34V
EDS Rating[3] 2kV

Operating Ratings[2]

Supply voltage (V_{IN}) ..... 2.5V to +10V
Output Voltage (V_{IN}) ..... V_{IN} to V_{OVP}
Junction Temperature (T_J) ..... –40°C to +125°C
Package Thermal Resistance
2mm x 2mm MLF® (θ_{JA}) ..... 93°C/W
Thin SOT-23-5 (θ_{JA}) ..... 256°C/W

Electrical Characteristics[4]

T_A = 25°C, V_{IN} = V_{EN} = 3.6V, V_{OUT} = 10V, I_{OUT} = 20mA, unless otherwise noted. **Bold** values indicate –40°C≤ T_J ≤ +125°C.

Symbol	Parameter	Condition	Min	Typ	Max	Units
V_{IN}	Supply Voltage Range		2.5		10	V
V_{UVLO}	Under Voltage Lockout		1.8	2.1	2.4	V
I_{VIN}	Quiescent Current	V_{FB} > 200mV, (not switching)		2.5	5	mA
I_{SD}	Shutdown Current	V_{EN} = 0V[5]		0.1	**1**	µA
V_{FB}	Feedback Voltage	(±10%)	85	95	105	mV
I_{FB}	Feedback Input Current	V_{FB} = 95Mv		–450		nA
	Line Regulation[6]	3V ≤ V_{IN} ≤ 5V		0.5		%
	Load Regulation[6]	5mA ≤ I_{OUT} ≤ 20mA		0.5		%
D_{MAX}	Maximum Duty Cycle		**85**	90		%
I_{SW}	Switch Current Limit			750		mA
V_{SW}	Switch Saturation Voltage	I_{SW} = 0.5A		450		mV
I_{SW}	Switch Leakage Current	V_{EN} = 0V, V_{SW} = 10V		0.01	**5**	µA
V_{EN}	Enable Threshold	TURN ON TURN OFF	**1.5**		 **0.4**	V V
I_{EN}	Enable Pin Current	V_{EN} = 10V		20	40	µA
f_{SW}	Oscillator Frequency		1.05	1.2	1.35	MHz
V_D	Schottky Forward Drop	I_D = 150mA		0.8	1	V
I_{RD}	Schottky Leakage Current	V_R = 30V			**4**	µA
V_{OVP}	Overvoltage Protection	MIC2289CBML-15 only MIC2289CBML-24 only MIC2289CBML-34 only	11.5 19 27	14 22.5 32	16.5 26 37	V V V
T_J	Overtemperature Threshold Shutdown	 Hysteresis		150 10		°C °C

Notes:

1. Absolute maximum ratings indicate limits beyond which damage to the component may occur. Electrical specifications do not apply when operating the device outside of its operating ratings. The maximum allowable power dissipation is a function of the maximum junction temperature, $T_{J(max)}$, the junction-to-ambient thermal resistance, θ_{JA}, and the ambient temperature, T_A. The maximum allowable power dissipation will result in excessive die temperature, and the regulator will go into thermal shutdown.
2. The device is not guaranteed to function outside its operating rating.
3. Devices are ESD sensitive. Handling precautions recommended. Human body model.
4. Specification for packaged product only.
5. I_{SD} = I_{VIN}.
6. Guaranteed by design

Typical Characteristics

Feedback Voltage vs. Input Voltage

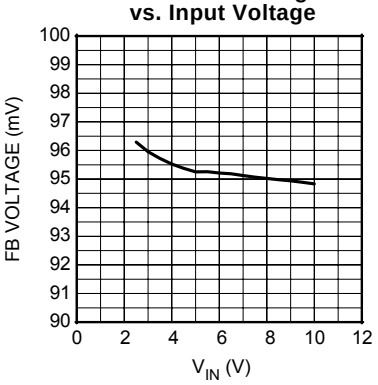

Shutdown Voltage vs. Input Voltage

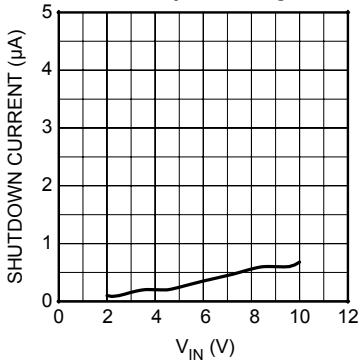

Quiescent Current vs. Input Current

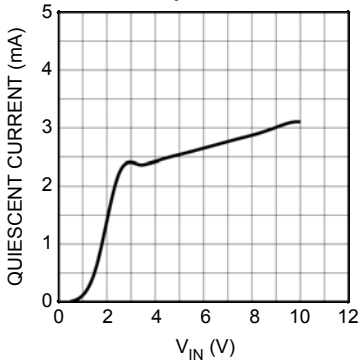

Switch Frequency vs. Temperature

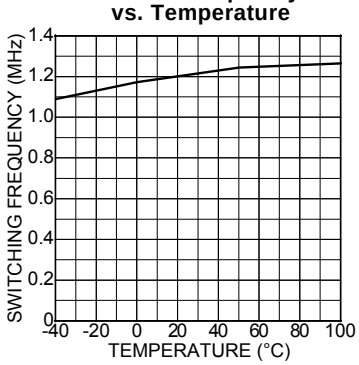

EN Pin Bias Current vs. Temperature

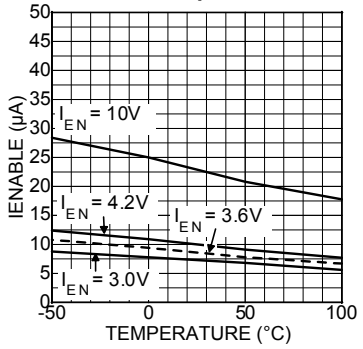

Schottky Forward Voltage Drop

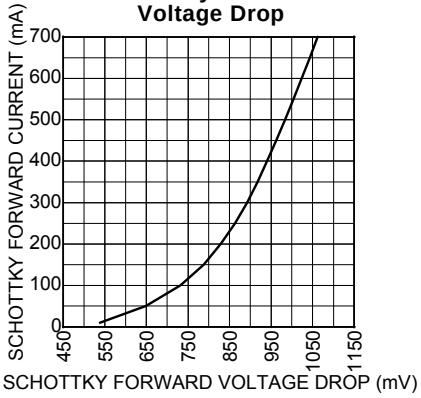

Schottky Reverse Leakage Current

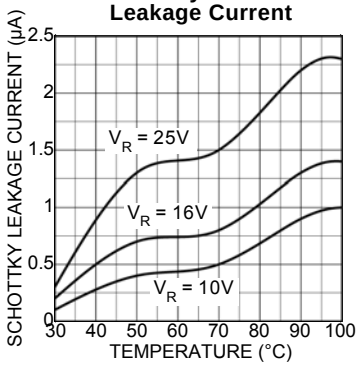

Saturation Voltage vs. Temperature

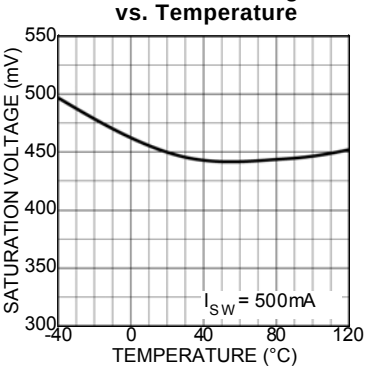

Current Limit vs. Temperature

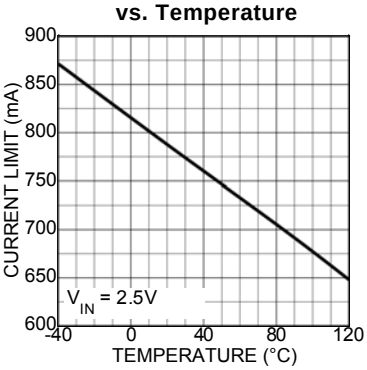

Switch Saturation Voltage vs. Current

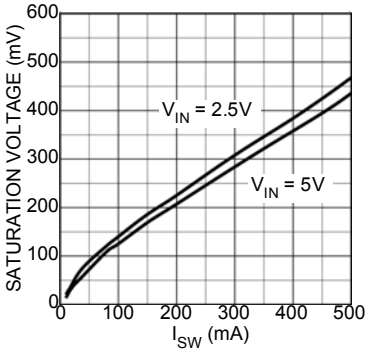

Functional Diagram

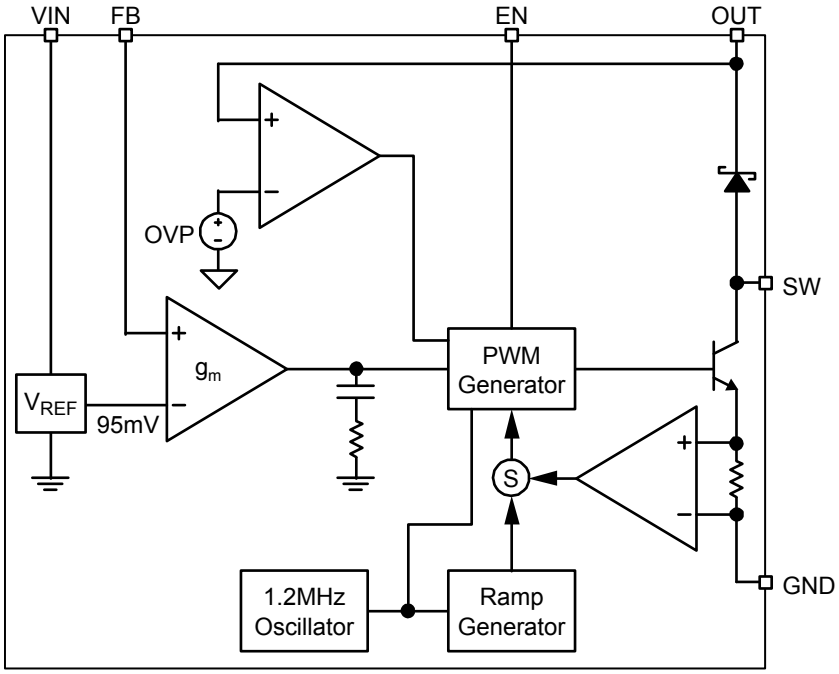

MIC2289C Block Diagram

Functional Description

The MIC2289C is a constant frequency, PWM current mode boost regulator. The block diagram is shown above. The MIC2289C is composed of an oscillator, slope compensation ramp generator, current amplifier, gm error amplifier, PWM generator, 500mA bipolar output transistor, and Schottky rectifier diode. The oscillator generates a 1.2MHz clock. The clock's two functions are to trigger the PWM generator that turns on the output transistor and to reset the slope compensation ramp generator. The current amplifier is used to measure the switch current by amplifying the voltage signal from the internal sense resistor. The output of the current amplifier is summed with the output of the slope compensation ramp generator. This summed current-loop signal is fed to one of the inputs of the PWM generator.

The gm error amplifier measures the LED current through the external sense resistor and amplifies the error between the detected signal and the 95mV reference voltage. The output of the gm error amplifier provides the voltage-loop signal that is fed to the other input of the PWM generator. When the current-loop signal exceeds the voltage-loop signal, the PWM generator turns off the bipolar output transistor. The next clock period initiates the next switching cycle, maintaining the constant frequency current-mode PWM control. The LED is set by the feedback resistor:

$$I_{LED} = \frac{95mW}{R_{FB}}$$

The Enable pin shuts down the output switching and disables control circuitry to reduce input current-to-leakage levels. Enable pin input current is zero at zero volts.

External Component Selection

The MIC2289C can be used across a wide rage of applications. The table below shows recommended inductor and output capacitor values for various series-LED applications.

Series LEDs	L	Manufacturer	Min C_{OUT}	Manufacturer
2	22µH	LQH32CN220K21 (Murata)	2.2µF	0805ZD225KAT(AVX)
		NLC453232T-220K(TDK)		GRM40X5R225K10(Murata)
	15µH	LQH32CN150K21 (Murata)	1µF	0805ZD105KAT(AVX)
		NLC453232T-150K(TDK)		GRM40X5R105K10(Murata)
	10µH	LQH32CN100K21 (Murata)	0.22µF	0805ZD224KAT(AVX)
		NLC453232T-100K(TDK)		GRM40X5R224K10(Murata)
	6.8µH	LQH32CN6R8K21 (Murata)	0.22µF	0805ZD225KAT(AVX)
		NLC453232T-6R8K(TDK)		GRM40X5R225K10(Murata)
	4.7µH	LQH32CN4R7K21 (Murata)	0.22µF	0805ZD224KAT(AVX)
		NLC453232T-4R7K(TDK)		GRM40X5R224K10(Murata)
3	22µH	LQH43MN220K21 (Murata)	2.2µF	0805YD225MAT(AVX)
		NLC453232T-220K(TDK)		GRM40X5R225K16(Murata)
	15µH	LQH43MN 150K21 (Murata)	1µF	0805YD105MAT(AVX)
		NLC453232T-150K(TDK)		GRM40X5R105K16(Murata)
	10µH	LQH43MN 100K21 (Murata)	0.22µF	0805YD224MAT(AVX)
		NLC453232T-100K(TDK)		GRM40X5R224K16(Murata)
	6.8µH	LQH43MN 6R8K21 (Murata)	0.22µF	0805YD224MAT(AVX)
		NLC453232T-6R8K(TDK)		GRM40X5R224K16(Murata)
	4.7µH	LQH43MN 4R7K21 (Murata)	0.27µF	0805YD274MAT(AVX)
		NLC453232T-4R7K(TDK)		GRM40X5R224K16(Murata)
4	22µH	LQH43MN220K21 (Murata)	1µF	0805YD105MAT(AVX)
		NLC453232T-220K(TDK)		GRM40X5R105K25(Murata)
	15µH	LQH43MN 150K21 (Murata)	1µF	0805YD105MAT(AVX)
		NLC453232T-150K(TDK)		GRM40X5R105K25(Murata)
	10µH	LQH43MN 100K21 (Murata)	0.27µF	0805YD274MAT(AVX)
		NLC453232T-100K(TDK)		GRM40X5R274K25(Murata)
	6.8µH	LQH43MN 6R8K21 (Murata)	0.27µF	0805YD274MAT(AVX)
		NLC453232T-6R8K(TDK)		GRM40X5R274K25(Murata)
	4.7µH	LQH43MN 4R7K21 (Murata)	0.27µF	0805YD274MAT(AVX)
		NLC453232T-4R7K(TDK)		GRM40X5R274K25(Murata)
5, 6	22µH	LQH43MN220K21 (Murata)	0.22µF	08053D224MAT(AVX)
		NLC453232T-220K(TDK)		GRM40X5R224K25(Murata)
	15µH	LQH43MN 150K21 (Murata)	0.22µF	08053D224MAT(AVX)
		NLC453232T-150K(TDK)		GRM40X5R224K25(Murata)
	10µH	LQH43MN 100K21 (Murata)	0.27µF	08053D274MAT(AVX)
		NLC453232T-100K(TDK)		GRM40X5R274K25(Murata)
	6.8µH	LQH43MN 6R8K21 (Murata)	0.27µF	08053D274MAT(AVX)
		NLC453232T-6R8K(TDK)		GRM40X5R274K25(Murata)
	4.7µH	LQH43MN 4R7K21 (Murata)	0.27µF	08053D274MAT(AVX)
		NLC453232T-4R7K(TDK)		GRM40X5R274K25(Murata)
7, 8	22µH	LQH43MN220K21 (Murata)	0.22µF	08053D224MAT(AVX)
		NLC453232T-220K(TDK)		GRM40X5R224K25(Murata)
	15µH	LQH43MN 150K21 (Murata)	0.22µF	08053D224MAT(AVX)
		NLC453232T-150K(TDK)		GRM40X5R224K25(Murata)
	10µH	LQH43MN 100K21 (Murata)	0.27µF	08053D274MAT(AVX)
		NLC453232T-100K(TDK)		GRM40X5R274K25(Murata)
	6.8µH	LQH43MN 6R8K21 (Murata)	0.27µF	08053D274MAT(AVX)
		NLC453232T-6R8K(TDK)		GRM40X5R274K25(Murata)
	4.7µH	LQH43MN 4R7K21 (Murata)	0.27µF	08053D274MAT(AVX)
		NLC453232T-4R7K(TDK)		GRM40X5R274K25(Murata)

Dimming Control

There are two techniques for dimming control. One is PWM dimming, and the other is continuous dimming.

1. PWM dimming control is implemented by applying a PWM signal on EN pin as shown in Figure 1. The MIC2289C is turned on and off by the PWM signal. With this method, the LEDs operate with either zero or full current. The average LED current is increased proportionally to the duty-cycle of the PWM signal. This technique has high-efficiency because the IC and the LEDs consume no current during the off cycle of the PWM signal. Typical frequency should be between 100Hz and 10kHz.
2. Continuous dimming control is implemented by applying a DC control voltage to the FB pin of the MIC2289C through a series resistor as shown in Figure 2. The LED current is decreased proportionally with the amplitude of the control voltage. The LED intensity (current) can be dynamically varied applying a DC voltage to the FB pin. The DC voltage can come from a DAC signal, or a filtered PWM signal. The advantage of this approach is that a high frequency PWM signal (>10kHz) can be used to control LED intensity.

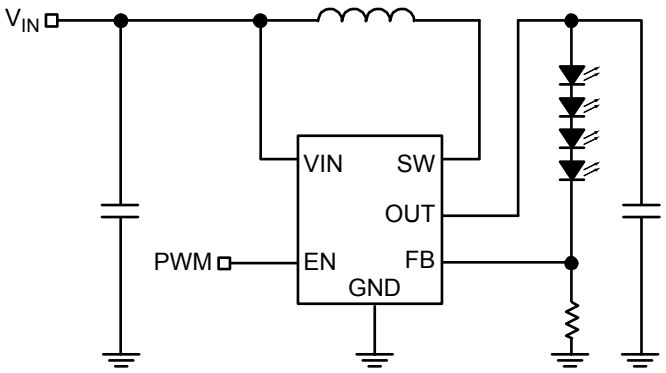

Figure 1. PWM Dimming Method

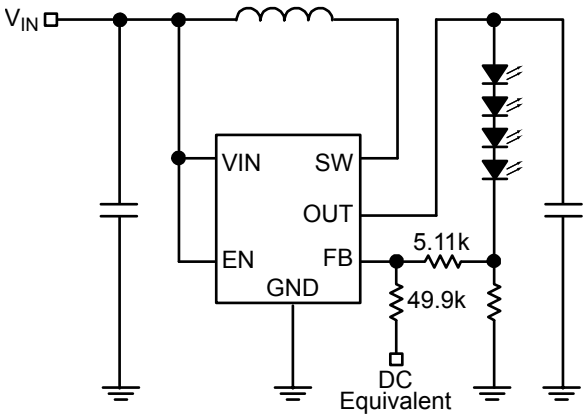

Figure 2. Continuous Dimming

Open-Circuit Protection

If the LEDs are disconnected from the circuit, or in case an LED fails open, the sense resistor will pull the FB pin to ground. This will cause the MIC2289C to switch with a high duty-cycle, resulting in output overvoltage. This may cause the SW pin voltage to exceed its maximum voltage rating, possibly damaging the IC and the external components. To ensure the highest level of protection, the MIC2289C has 3 product options in the 2mm × 2mm MLF®-8 with overvoltage protection, OVP. The extra pins of the 2mm × 2mm MLF®-8 package allow a dedicated OVP monitor with options for 15V, 24V, or 34V (see Figure 3). The reason for the three OVP levels is to let users choose the suitable level of OVP for their application. For example, a 3-LED application would typically see an output voltage of no more than 12V, so a 15V OVP option would offer a suitable level of protection. This allows the user to select the output diode and capacitor with the lowest voltage ratings, therefore smallest size and lowest cost. The OVP will clamp the output voltage to within the specified limits. For the Thin SOT-23-5 package, an OVP pin is not available. An external zener diode can be connected from the output of the converter to FB pin as shown in Figure 4 to implement similar protection.

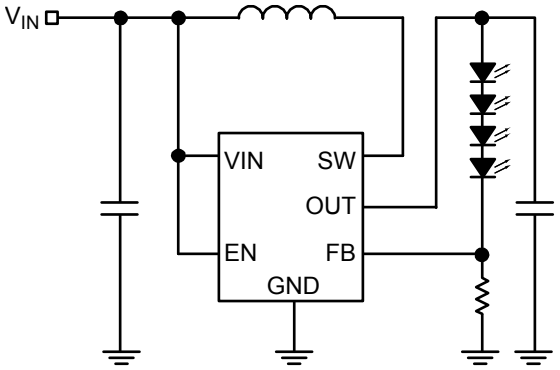

Figure 3. MLF® Package OVP Circuit

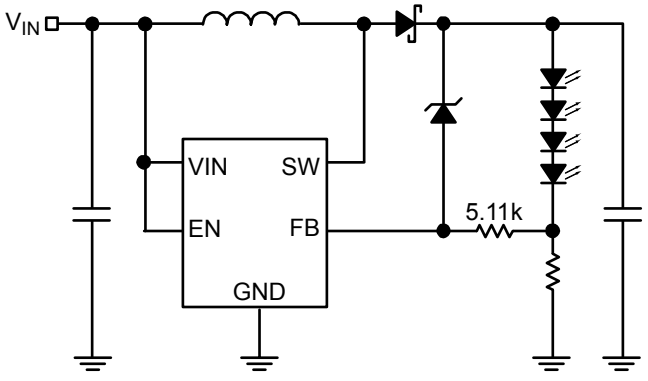

Figure 4. Thin SOT-23 Package OVP Circuit

Start-Up and Inrush Current

During start-up, inrush current of approximately double the nominal current flows to set up the inductor current and the voltage on the output capacitor. If the inrush current needs to be limited, a soft-start circuit similar to Figure 5 could be implemented. The soft-start capacitor, CSS, provides over-drive to the FB pin at start-up, resulting in gradual increase of switch duty cycle and limited inrush current.

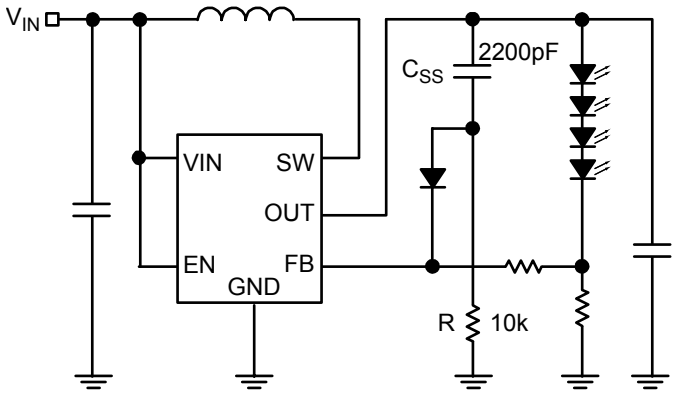

Figure 5. One of Soft-Start Circuit

6-Series LED Circuit without External Soft-Start

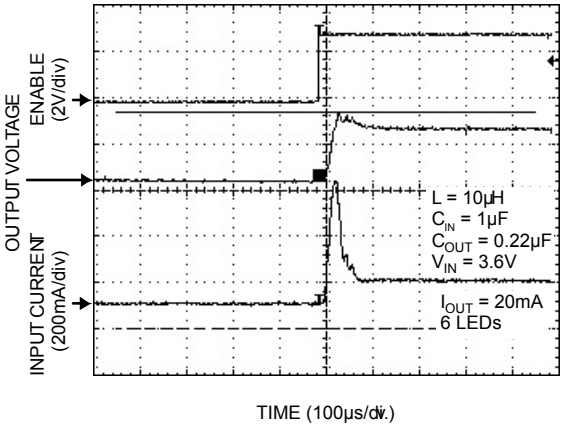

Figure 6. 6-Series LED Circuit without External Soft Start

6-Series LED Circuit with External Soft-Start

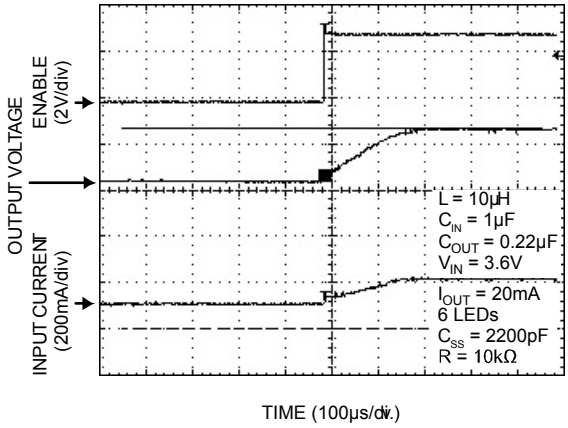

Figure 7. 6-Series LED Circuit with External Soft Start

Package Information

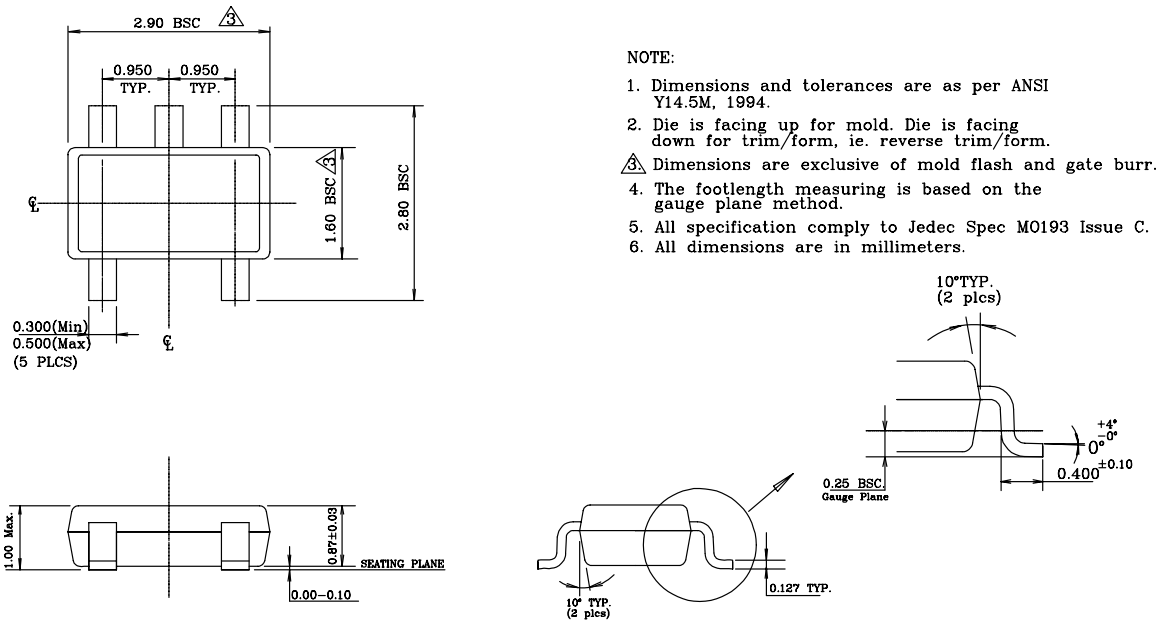

5-Pin Thin SOT-23 (D5)

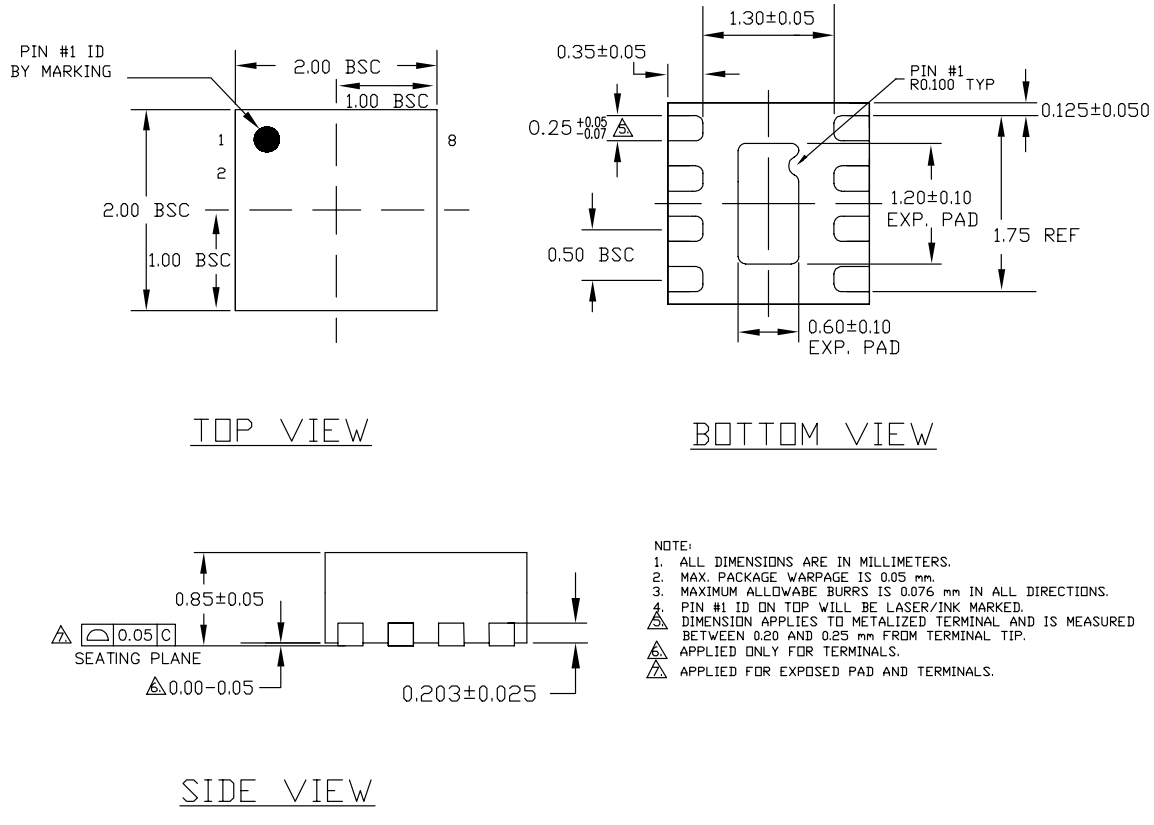

8-Pin MLF® (ML)

MICREL, INC. 2180 FORTUNE DRIVE SAN JOSE, CA 95131 USA
TEL +1 (408) 944-0800 FAX +1 (408) 474-1000 WEB http:/www.micrel.com

The information furnished by Micrel in this data sheet is believed to be accurate and reliable. However, no responsibility is assumed by Micrel for its use. Micrel reserves the right to change circuitry and specifications at any time without notification to the customer.

Micrel Products are not designed or authorized for use as components in life support appliances, devices or systems where malfunction of a product can reasonably be expected to result in personal injury. Life support devices or systems are devices or systems that (a) are intended for surgical implant into the body or (b) support or sustain life, and whose failure to perform can be reasonably expected to result in a significant injury to the user. A Purchaser's use or sale of Micrel Products for use in life support appliances, devices or systems is a Purchaser's own risk and Purchaser agrees to fully indemnify Micrel for any damages resulting from such use or sale.

© 2005 Micrel, Incorporated.