MIC2251

High-Efficiency Low EMI Boost Regulator

General Description

The MIC2251 is a general purpose DC/DC boost switching regulator that features low noise, EMI reduction circuitry, and high efficiency across a wide output current range.

The MIC2251 is optimized for noise-sensitive hand held battery powered applications. A proprietary control method allows low ripple across the output voltage and current ranges. The MIC2251 incorporates a pseudo-random dithering function to reduce EMI levels up to 10dB enabled by the DITH pin.

The MIC2251 is designed for use with inductor values from 4.7µH to 22µH, and is stable with ceramic capacitors from 1µF to 22µF.

The MIC2251 attains a high peak efficiency up to 90% at 100mA and excellent light load efficiency of 80% at 1mA.

High power density is achieved with the MIC2251's internal 40V/2A rated switch, allowing it to power large loads in a tiny footprint.

The MIC2251-1 is available in a 5-pin Thin SOT-23 package with dithering disabled. While the MIC2251-2 is available in a 5-pin Thin SOT-23 package with dithering enabled. The MIC2251 is available in a 8-pin 2mm x 2mm MLF® leadless package option with an operating junction temperature range of –40°C to +125°C.

Data sheets and support documentation can be found on Micrel's web site at: www.micrel.com.

Features

- Over 80% efficient for a 300:1 load range
- 2.5V to 5.5V input voltage range
- Output voltage adjustable to 37V
- 52µA (typ) quiescent current
- Constant peak current control reduces output ripple
- EMI reduction circuitry
- Stable with small ceramic capacitors
- <1µA shutdown current
- UVLO and thermal shutdown
- 8-pin 2mm x 2mm leadless MLF® package (MIC2251)
- 5-pin Thin SOT-23 package (MIC2251-1 & -2)
- –40°C to +125°C junction temperature range

Applications

- LCD/OLED display bias supply
- CCD bias supply
- Mobile Phones, PDA, Media Players, GPS PND
- Haptic displays
- Local 5V, 15V, 24V rail

Typical Application

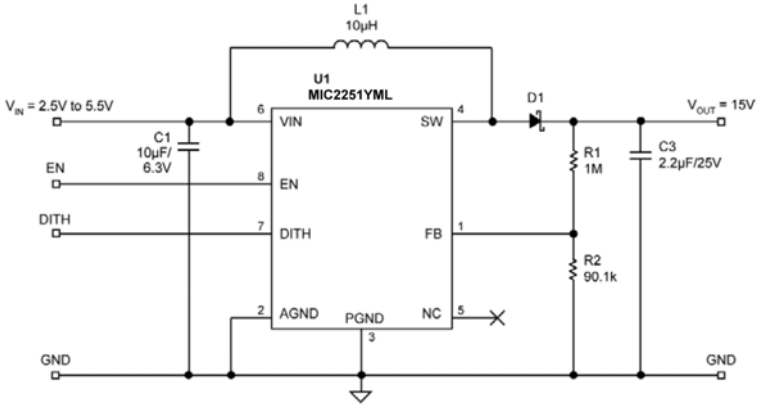

MLF and *Micro*LeadFrame are registered trademarks of Amkor Technology, Inc.

Ordering Information

Part Number	Marking[1]	Junction Temp. Range	Package[3]	Lead Finish
MIC2251YML	$\overline{\text{ADA}}$ [2]	–40° to +125°C	8-Pin 2mm x 2mm MLF®	Pb-Free
MIC2251-1YD5	DZ1[2]	–40° to +125°C	5-Pin Thin SOT-23	Pb-Free
MIC2251-2YD5	DZ2[2]	–40° to +125°C	5-Pin Thin SOT-23	Pb-Free

Note:

1. Pin 1 identifier = "•".
2. Over/Underbar (/__) may not be to scale.
3. MLF® is GREEN RoHs compliant package. Lead finish is NiPdAu. Mold compound is Halogen Free.

Pin Configuration

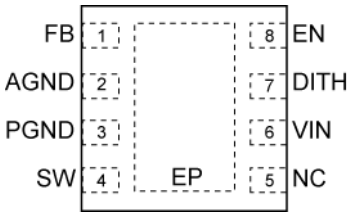

8-Pin 2mm x 2mm MLF® (ML)
(Top View)

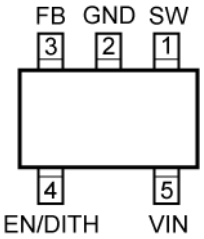

5-Pin Thin SOT-23 (D5)
(Top View)

Pin Description

Pin Name	Pin Number MIC2251YML	Pin Number MIC2251-1YD5	Pin Number MIC2251-2YD5	Pin Function
FB	1	3	3	Feedback (Input): 1.24V output voltage sense node. V_{OUT} = 1.24V (1 + R1/R2)
AGND	2	—	—	Analog Ground. Connect to power ground.
PGND	3	2	2	Power Ground.
SW	4	1	1	Switch Node (Input): Internal power NMOS drain.
NC	5	—	—	Not Internally Connected.
VIN	6	5	5	Supply (Input): 2.5V to 5.5V input voltage.
DITH	7	—	4	Frequency Dithering (Input): Connect this pin high to enable pseudo-random on-time dithering to reduce EMI. Connect this pin-to-ground to disable this function.
EN	8	4	4	Enable (Input): Logic high enables the regulator. Logic low shuts down the regulator. Do not leave floating.
HS PAD	EP	—	—	Ground (Return): Exposed backside pad. Connect to power ground.

Absolute Maximum Ratings[1]

Supply Voltage (V_{IN}) 6V
Switch Voltage (V_{SW}) ..... –0.3V to 40V
Enable Voltage (V_{EN}) ..... –0.3V to V_{IN}
FB Voltage (V_{FB}) 6V
Switch Current (I_{SW}) 3.5A
Ambient Storage Temperature (Ts) ..... –65°C to +150°C
ESD Rating[4] ..... ESD Sensitive

Operating Ratings[2]

Supply Voltage (V_{IN}) ..... 2.5V to 5.5V
Enable Voltage (V_{EN}) ..... 0V to V_{IN}
Junction Temperature (T_J)[3] ..... –40°C to +125°C
Junction Thermal Resistance
2mm x 2mm MLF®-8 (θ_{JA}) ..... 90°C/W

Electrical Characteristics[5]

$V_{IN} = V_{EN} = 3.6V$; $V_{DITH} = 0V$; $V_{OUT} = 15V$; $I_{OUT} = 40mA$; $T_A = 25°C$, unless otherwise noted. **Bold** values indicate $–40°C \le T_J \le +85°C$.

Symbol	Parameter	Condition	Min	Typ	Max	Units
V_{IN}	Input Voltage Range		2.5		5.5	V
V_{ULVO}	Under-voltage Lockout	V_{IN} rising	1.8	2	2.4	V
I_Q	Quiescent Current	V_{FB} = 1.5V (not switching)		70	**120**	µA
I_{SD}	Shutdown Current	V_{EN} = 0V, **Note 6**		0.1	**1**	µA
V_{FB}	Feedback Voltage		1.20	1.24	1.277	V
		$–40°C \le T_J \le +85°C$	**1.19**		**1.29**	V
I_{FB}	Feedback Input Current	V_{FB} = 1.24V		10		nA
PFM Operation						
Tss	Soft Start time			1		ms
t_{SW}	Switch Off-time	V_{IN} = 3.6V		1.6		µs
D_{MAX}	Maximum Duty Cycle		75	87		%
t_{DITH}	Off-time Dithering	V_{DITH} = 3.6V. Percentage from nominal.		±20		%
	Line Regulation	$3V \le V_{IN} \le 5V$		0.3	**2**	%
	Load Regulation	$1mA \le I_{OUT} \le 40mA$		0.1	**2**	%
I_{SW}	Switch Current Limit	**Note 7**	0.9	1.6		A
R_{ON}	Switch ON-resistance	I_{SW} = 200mA		0.7	1	Ω
I_{SW}	Switch Leakage Current	V_{EN} = 0V, V_{SW} = 10V		0.01	**5**	µA
V_{EN}, V_{DITH}	Logic Input Thresholds	Turn ON	**1.5**			V
		Turn OFF			**0.4**	V
I_{EN}	Enable Pin Current	$V_{EN} = V_{IN}$ = 5.0V		0.1	2	µA
T	Thermal Shutdown Threshold			130		°C
		Hysteresis		15		°C

Notes:

1. Absolute maximum ratings indicate limits beyond which damage to the component may occur.
2. The device is not guaranteed to function outside its operating rating.
3. The maximum allowable power dissipation is a function of the maximum junction temperature, $T_{J(Max)}$, the junction-to-ambient thermal resistance, θ_{JA}, and the ambient temperature, T_A. The maximum allowable power dissipation will result in excessive die temperature, and the regulator will go into thermal shutdown.
4. Devices are ESD sensitive. Handling precautions recommended. Human body model, 1.5kΩ in series with 100pF.
5. Specification for packaged product only.
6. $I_{SD} = I_{VIN}$.
7. Guaranteed by design.

Typical Characteristics

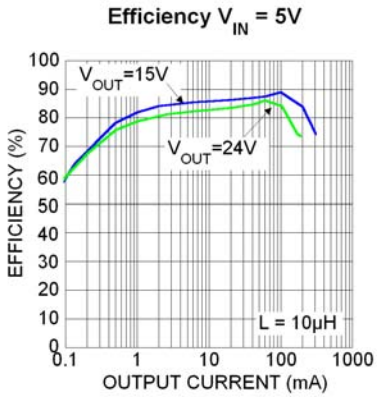

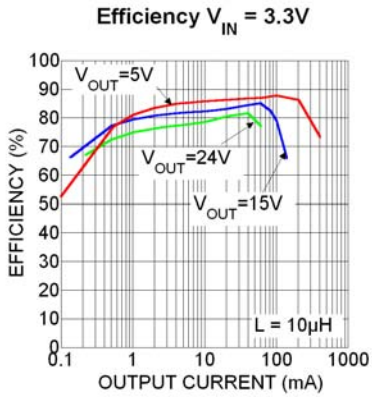

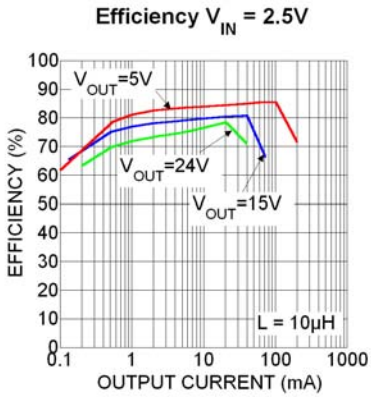

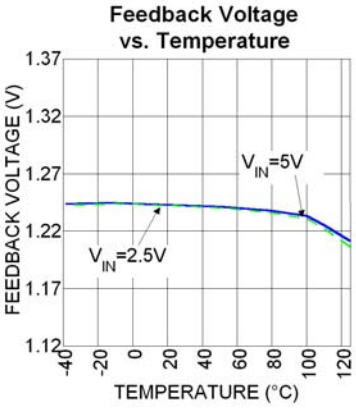

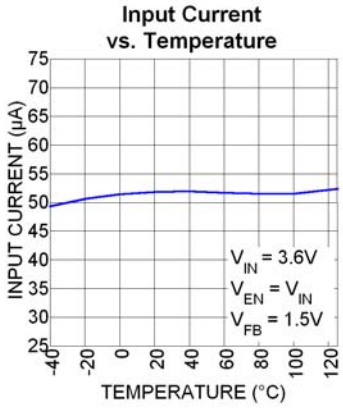

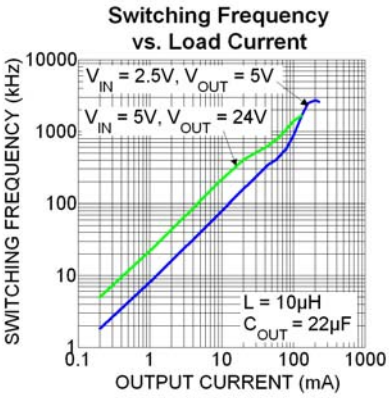

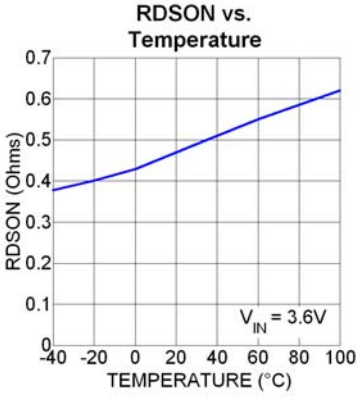

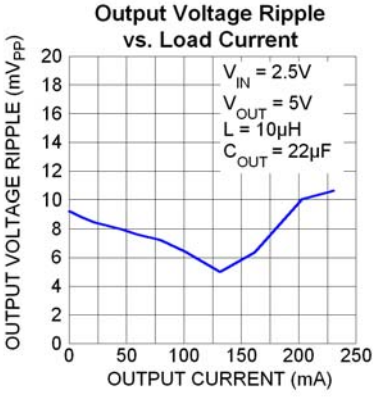

Functional Characteristics

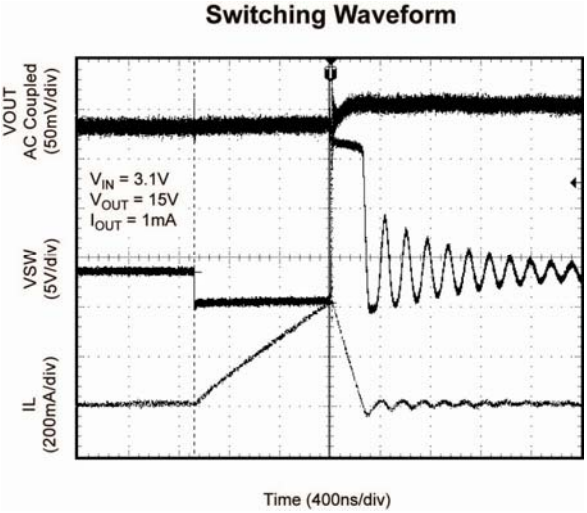

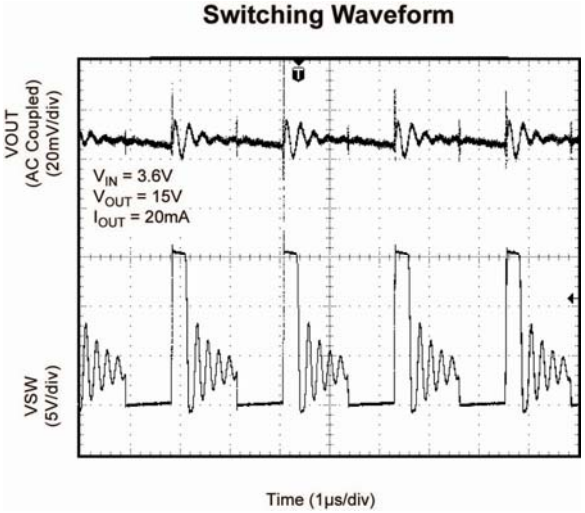

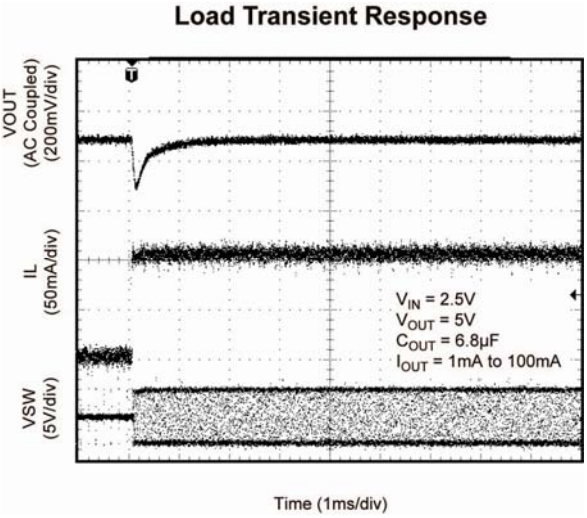

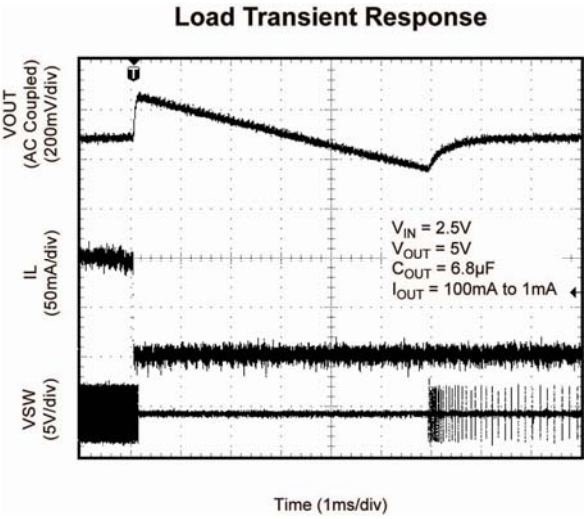

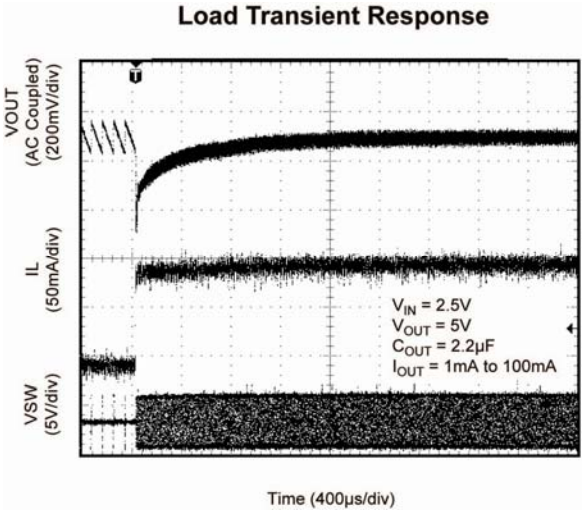

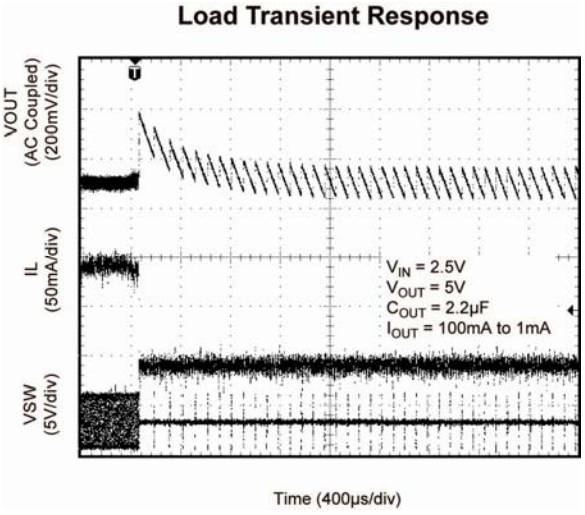

Functional Characteristics (continued)

Current Limit

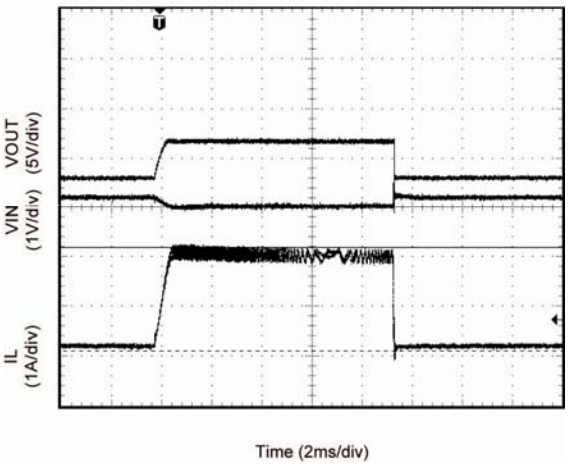

Start-Up Waveform

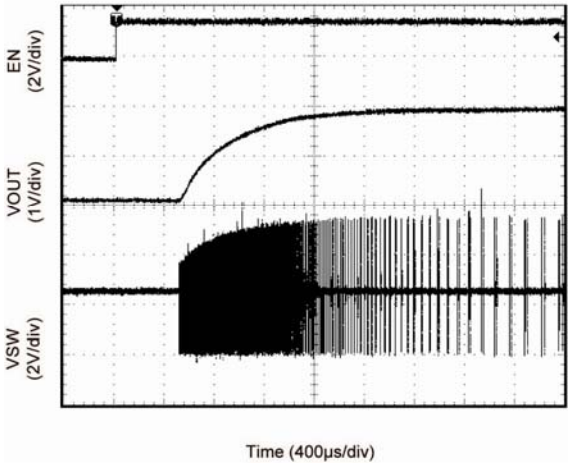

EMI Improvment Using Dithering

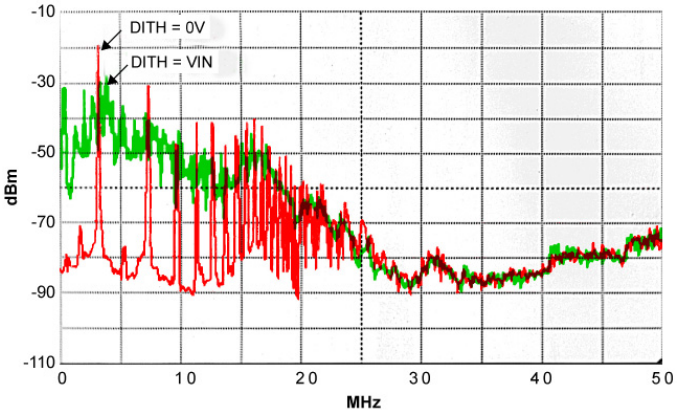

Functional Diagram

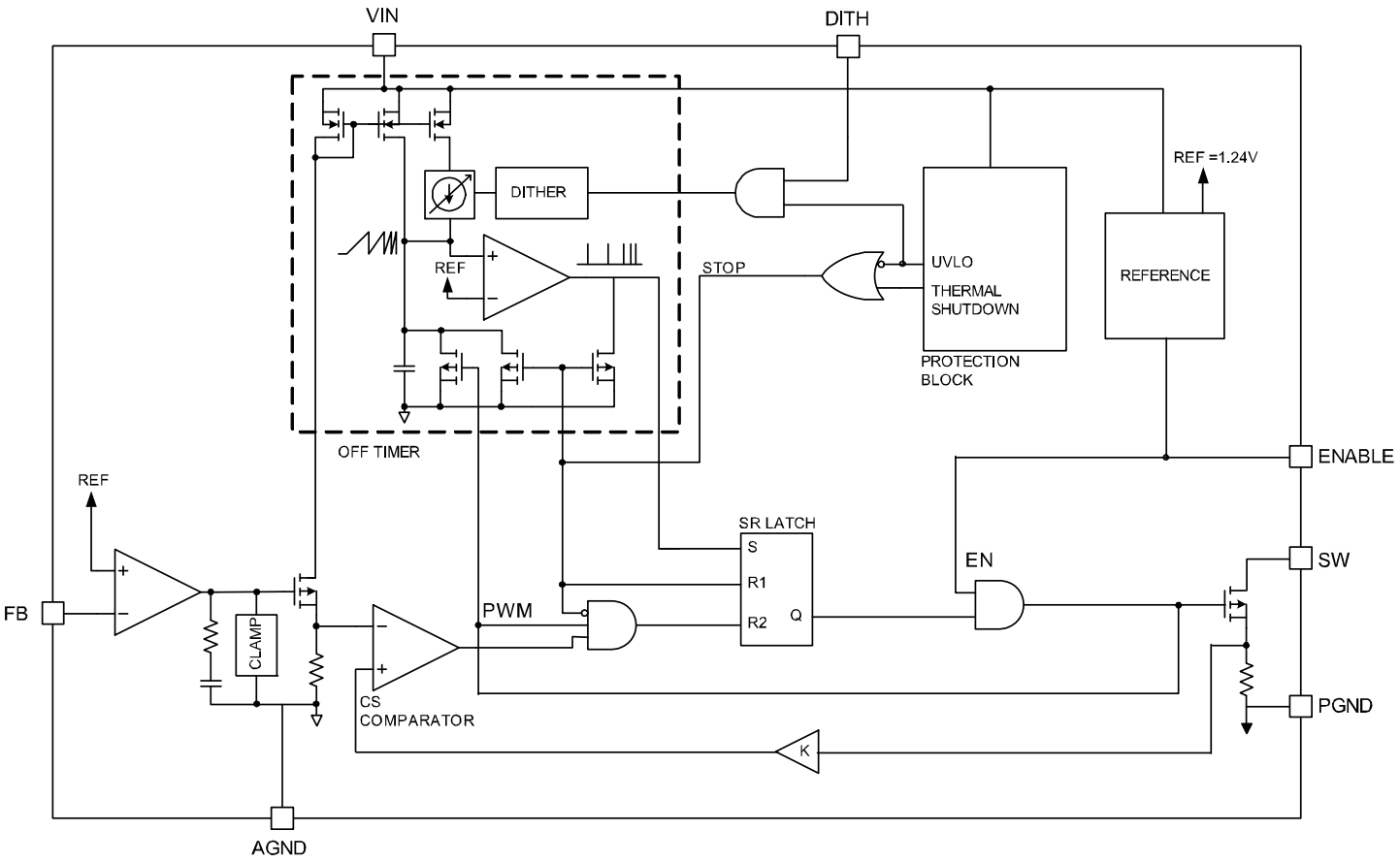

Functional Description

VIN

The input supply (VIN) provides power to the internal MOSFETs and control circuitry for the switch mode regulator. The operating input voltage range is from 2.5V to 5.5V. An input capacitor with a minimum voltage rating of 6.3V is recommended. Refer to the layout recommendations for details.

EN

A logic level input of 1.5V or higher enables the regulator. A logic input of 0.4V or less places the regulator in shutdown mode which reduces the supply current to less than 1µA. The MIC2251 features built-in soft start circuitry that reduces in-rush current and prevents the output voltage from overshooting during startup. Do not leave the Enable pin floating.

SW

The MIC2251 has an internal MOSFET switch that connects directly to one end of the inductor (SW pin) and provides a current path to ground during switching cycles. The source of the internal MOSFET connects through a current sense resistor to ground.

PGND

The power ground pin is the high current path to ground. The current loop for the power ground should be as small as possible and separate from the analog ground (AGND). Refer to the layout recommendations for more details.

AGND

Analog ground (AGND) is the ground path for the biasing and control circuitry. The current loop for the signal ground should be separate from the power ground (PGND) loop. Refer to the layout recommendations for more details.

DITH

The DITH function is a frequency dithering technique that reduces EMI noise by spreading the boost regulators' noise spectrum. This technique reduces the EMI peaks by distributing the switching frequency across a wider spectrum. Connect this pin high to enable the pseudo-random on-time dithering. Connect this pin to ground to disable this function.

FB

The feedback pin (FB) allows the regulated output voltage to be set by applying an external resistor divider network. The internal reference voltage is 1.24V. The output voltage is calculated from the following equation:

$$V_{OUT} = 1.24V\left(1+\frac{R1}{R2}\right)$$

Application Information

Overview

The MIC2251 Boost Regulator utilizes a combination of PFM & Current Mode Control to achieve very high efficiency over a wide range of output load. This innovative design is the basis for the regulator's high efficiency, excellent stability, and self compensation technique. The boost regulator performs a power conversion that results in an output voltage that is greater than the input. Operation starts with activating an internal MOSFET switch which draws current through the inductor (L1). While one end of the inductor is fixed at V_{IN}, the other end is switched up and down. While the switch is on, the current through the inductor increases. When the switch is off the inductor current continues to flow through the output diode.

The current flow imposes a voltage across the inductor, which is added to V_{IN} to produce a higher voltage V_{OUT}. At low power levels (typically less than 1W), the period varies between switching cycles, indicative of Pulse Frequency Modulation (PFM). As the output power increases beyond approximately 1W, the period between switching cycles continues to decrease and the power (switch current) delivered with each cycle increases indicative of Current Mode control.

PFM Regulation

The error amplifier compares the regulator's reference voltage with the feedback voltage obtained from the output resistor voltage divider network. The resulting error voltage acts as a correction input signal to the control block. The control block generates two signals that turn on and off the output MOSFET switch. An increase in load current causes V_{OUT} and V_{FB} to decrease in value. The control loop then changes the switching frequency to increase the energy transferred to the output capacitor to regulate the output voltage. A reduction in load causes V_{OUT} and V_{FB} to increase. Now the control loop compensates by reducing the effective switching frequency, thus reducing the amount of energy delivered to the output capacitor in order to keep the output voltage within regulation.

Current Mode Regulation

The control block's oscillator starts the cycle by setting the MOSFET switch control flip flop. The switch then turns on. This flip flop is reset when the switch current ramp reaches the threshold set by the error amplifier. If the error amplifier indicates that V_{FB} is either too high or too low, then the threshold for the comparator measuring the switch current is appropriately adjusted to bring V_{OUT} back to within regulation limits. The level of the error signal also sets the off time of the switch. A higher error signal (output voltage is low) will reduce off time to increase energy transfer to the output. A lower error signal (output voltage is high) will conversely, increase off time to reduce energy transfer to the output.

Component Selection

Resistors

An external resistive divider network (R1 and R2) with its center tap connected to the feedback pin sets the output voltage. The appropriate R1 and R2 values for the desired output voltage are calculated by:

$$R2 = \frac{R1}{\left(\frac{V_{OUT}}{1.24V} - 1\right)}$$

Large resistor values are recommended to reduce light load operating current, and improve efficiency. The table below gives a good compromise between quiescent current and accuracy. Additionally, a feedforward capacitor (C_{FF}) (placed in parallel with R1) may be added to improve transient performance. Recommended values are suggested below:

V_{OUT}	Suggested R1	C_{FF}
5V to 10V	100k	4.7nF
10V to 15V	240k	2.2nF
15V to 37V	1M	470pF

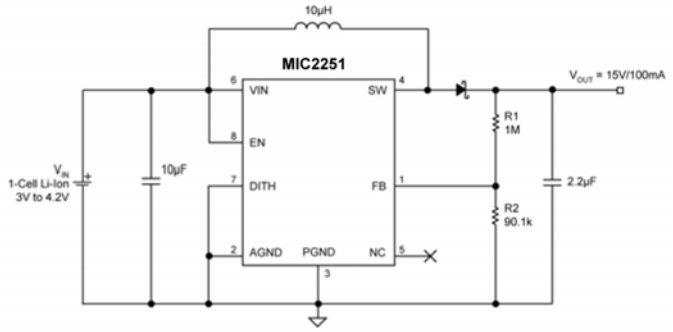

Figure 1. Typical Application Circuit

Inductor

Inductor selection is a balance between efficiency, stability, cost, size, and rated current. For most applications, inductors in the range 4.7uH to 22uH are recommended. Larger inductance values reduce the peak-to-peak ripple current, thereby reducing both the DC losses and the transition losses for better efficiency. The inductor's DC resistance (DCR) also plays an important role. Since the majority of the input current (minus the MIC2251 operating current) is passed through the inductor, higher DCR inductors will reduce efficiency at higher load currents. Figure 2 shows the comparison of efficiency between a 140mΩ DCR, 4.7uH inductor and a 190mΩ DCR, 10uH inductor. The switch

current limit for the MIC2251 is typically 2A. The saturation current rating of the selected inductor should be 20-30% higher than the 2A specification for proper operation.

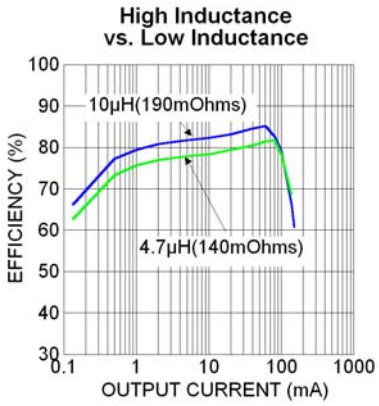

Figure 2. Efficiency Comparison between Lower and Higher Inductor Values

Input Capacitor

The boost converter exhibits a triangular current waveform at its input, so an input capacitor is required to decouple this waveform and thereby reduce the input voltage ripple. A 10uF to 22uF ceramic capacitor should be sufficient for most applications. A minimum input capacitance of 1uF is recommended. The input capacitor should be as close as possible to the inductor and the MIC2251, with short PCB traces for good noise performance.

Output Capacitor

Output capacitor selection is also a trade-off between performance, size, and cost. Increasing C_{OUT} will lead to an improved transient response however the size and cost also increase. X5R and X7R ceramic capacitors are recommended. For most applications, 2.2uF to 22uF should be sufficient.

Diode

The MIC2251 requires an external diode for operation. The diode must be rated for the peak inductor current, and its reverse voltage rating must be greater than the output voltage. A Schottky diode is recommended for lower output voltages due to its lower forward voltage drop and reverse recovery time. However, at higher output voltages (>10V), a high speed diode such as LS4148 can be more efficient as it has the advantage of considerably lower leakage currents, especially at higher temperatures. This will greatly improve light load efficiency when compared to a Schottky diode.

For example: At 70°C ambient temperature, V_{IN} = 2.5V, V_{OUT}= 24V at no load.

Input current (Vishay SL04 Schottky) = 2.1mA

Input current (Generic LS4148) = 0.37mA

MIC2251 Schematic

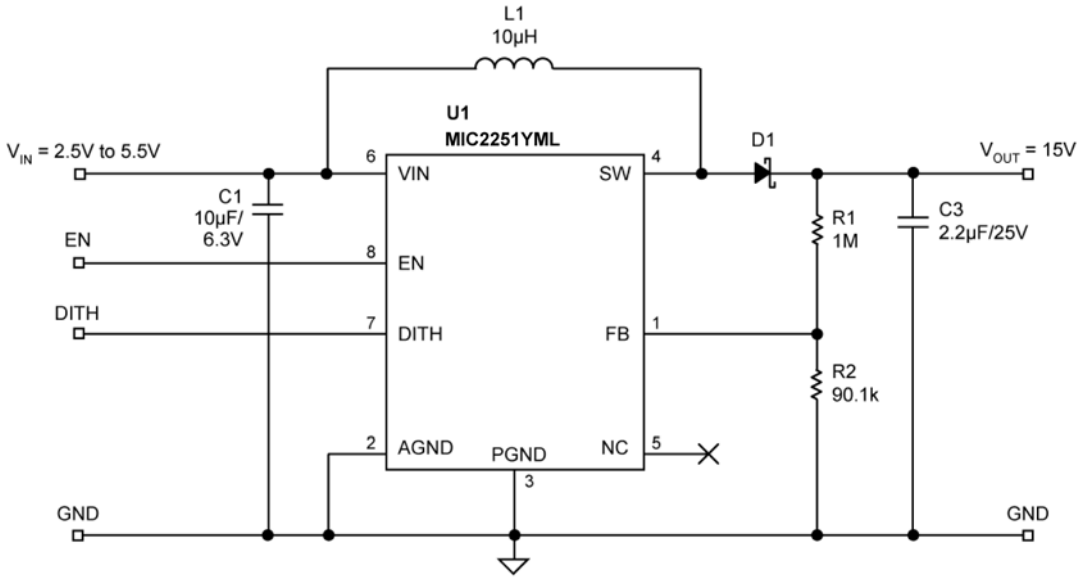

Bill of Materials

Item	Part Number	Manufacturer	Description	Qty.
C1	C2012X5R0J106K	TDK[1]	Capacitor, 10µF, 6.3V, X5R	1
	VJ0805G106KXYAT	Vishay Vitramon[2]		
	08056D106KAT	AVX[3]		
	GRM21BR60J106M	Murata[4]		
C3	C2012X5R1E225K	TDK[1]	Capacitor, 2.2µF, 25V, X5R	1
	08053C225MAT	AVX[3]		
	GRM21R61E225KE36D	Murata[4]		
D1	LS4148	Vishay[2]	High Speed Diode, 75V, 300mA	1
	LS04	Vishay[2]	Schottky Diode, 40V, 1A	
L1	VLF5012ST-100M1R0	TDK[1]	10µH	1
	LPS4018-100	Coilcraft[5]	10µH, 10%	
	CDRH4D28NP-100NC	Sumida[6]	10µH, 1.26A	
R1	CRCW06031004FKEYE3	Vishay Dale[2]	Resistor, 1M, 1%. 1/16W, Size 0603	1
R2	CRCW06039012FKEYE3	Vishay Dale[2]	Resistor, 90.1k, 1%. 1/16W, Size 0603	1
U1	**MIC2251YML**	**Micrel, Inc. [7]**	**High-Efficiency Low EMI Boost Regulator**	**1**

Notes:

1. TDK: www.tdk.com.
2. Vishay: www.vishay.com.
3. AVX: www.avx.com.
4. Murata: www.murata.com.
5. Coilcraft: www.coilcraft.com.
6. Sumida: www.sumida.com.
7. **Micrel, Inc.: www.micrel.com.**

PCB Layout Recommendations

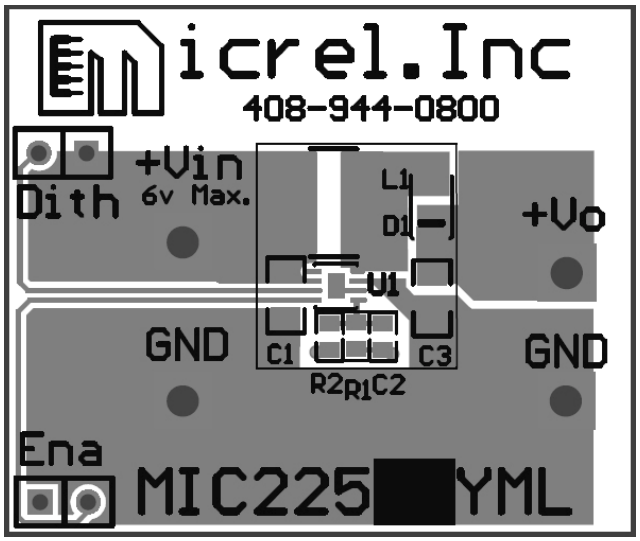

Top Layer

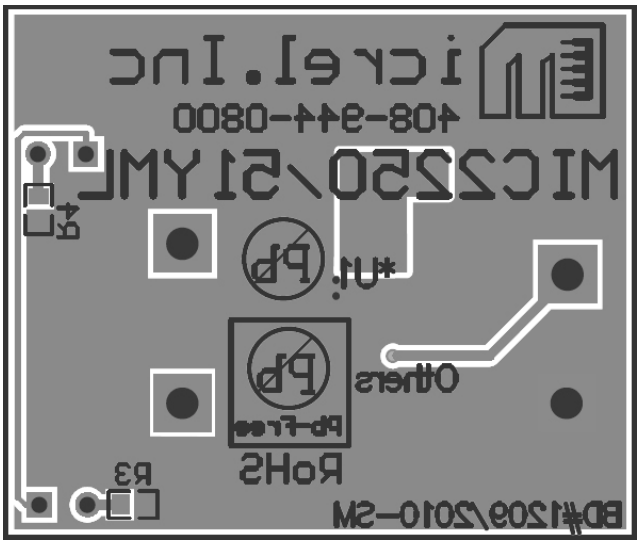

Bottom Layer

Package Information

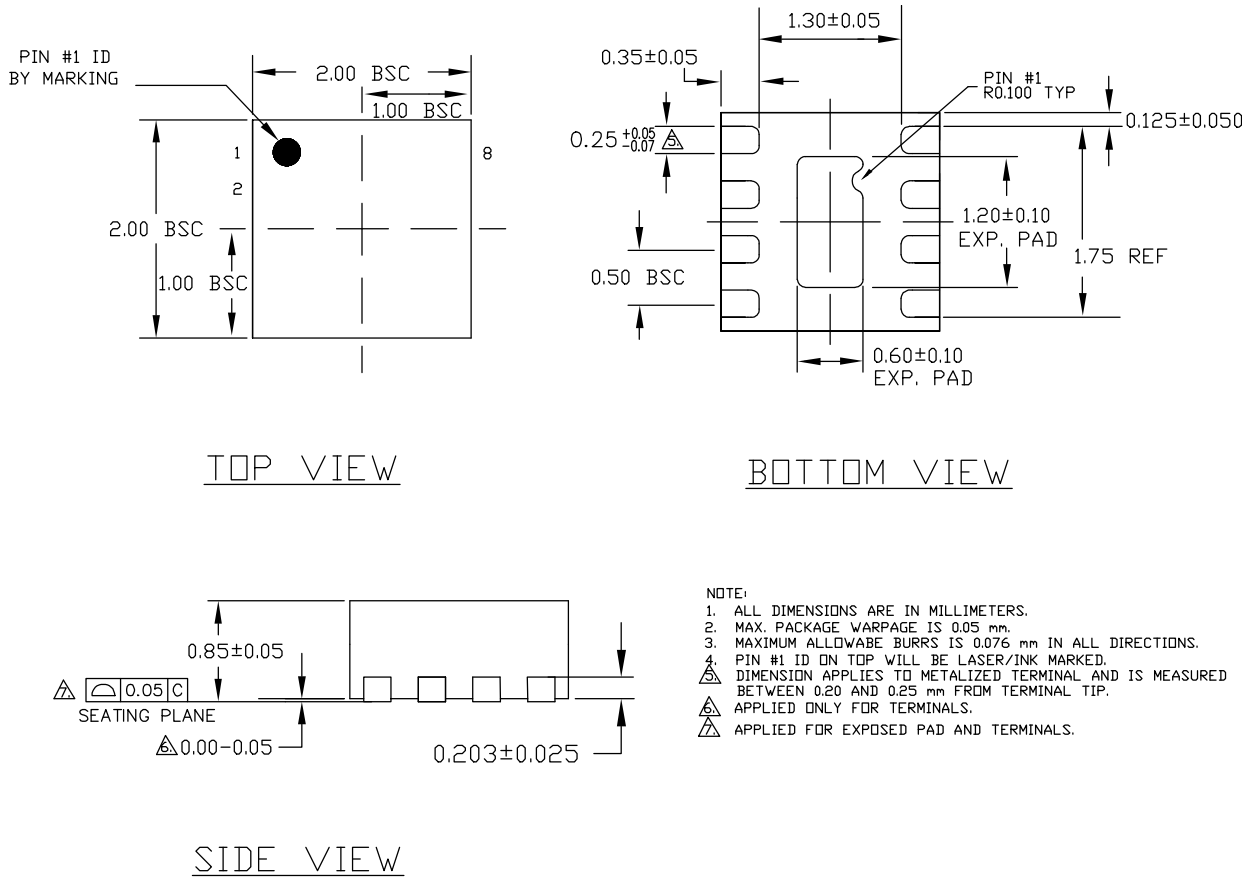

8-Pin 2mm x 2mm MLF® (ML)

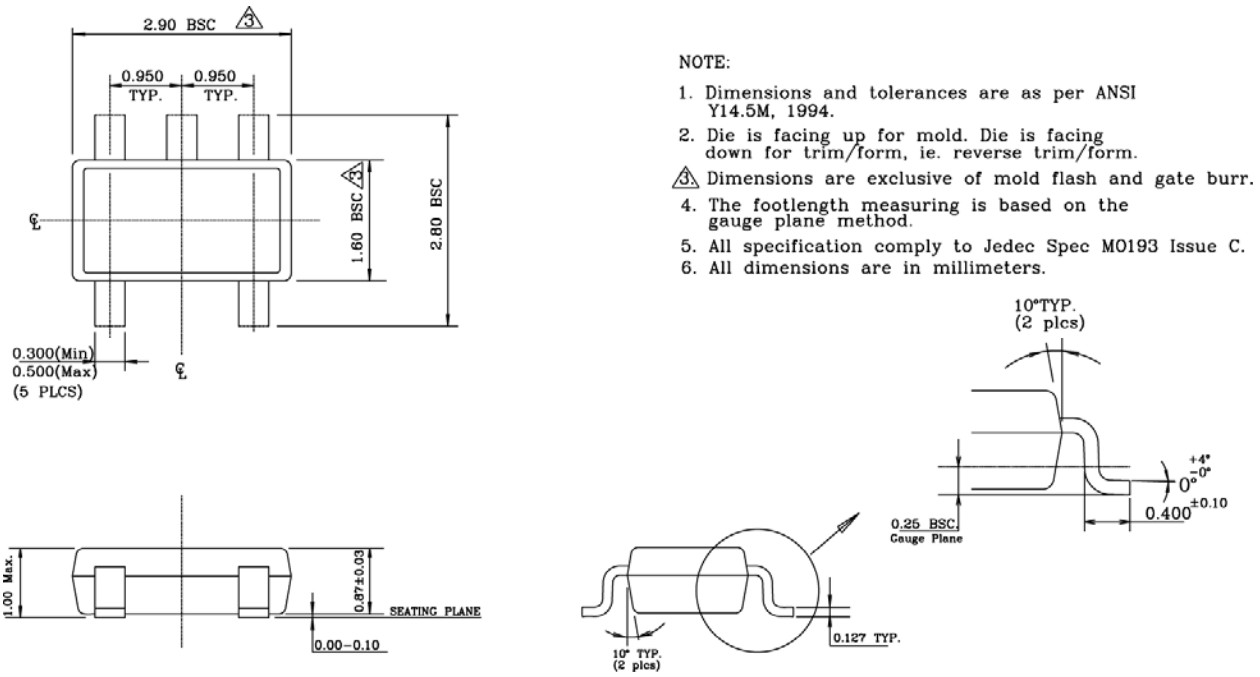

NOTE:

1. Dimensions and tolerances are as per ANSI Y14.5M, 1994.
2. Die is facing up for mold. Die is facing down for trim/form, ie. reverse trim/form.
3. Dimensions are exclusive of mold flash and gate burr.
4. The footlength measuring is based on the gauge plane method.
5. All specification comply to Jedec Spec M0193 Issue C.
6. All dimensions are in millimeters.

5-Pin Thin SOT-23 (D5)

MICREL, INC. 2180 FORTUNE DRIVE SAN JOSE, CA 95131 USA
TEL +1 (408) 944-0800 FAX +1 (408) 474-1000 WEB http://www.micrel.com

Micrel makes no representations or warranties with respect to the accuracy or completeness of the information furnished in this data sheet. This information is not intended as a warranty and Micrel does not assume responsibility for its use. Micrel reserves the right to change circuitry, specifications and descriptions at any time without notice. No license, whether express, implied, arising by estoppel or otherwise, to any intellectual property rights is granted by this document. Except as provided in Micrel's terms and conditions of sale for such products, Micrel assumes no liability whatsoever, and Micrel disclaims any express or implied warranty relating to the sale and/or use of Micrel products including liability or warranties relating to fitness for a particular purpose, merchantability, or infringement of any patent, copyright or other intellectual property right.

Micrel Products are not designed or authorized for use as components in life support appliances, devices or systems where malfunction of a product can reasonably be expected to result in personal injury. Life support devices or systems are devices or systems that (a) are intended for surgical implant into the body or (b) support or sustain life, and whose failure to perform can be reasonably expected to result in a significant injury to the user. A Purchaser's use or sale of Micrel Products for use in life support appliances, devices or systems is a Purchaser's own risk and Purchaser agrees to fully indemnify Micrel for any damages resulting from such use or sale.

© 2010 Micrel, Incorporated.