Intelligent Infrared Carbon Dioxide Module

(Model: MH-Z14)

User's Manual V2.4

Valid from May 1st,2014

Zhengzhou Winsen Electronics Technology CO., LTD.

Statement

The copyright of this manual belongs to Zhengzhou Winsen Electronics Technology Co., LTD.

Without the written permission, any part of this manual shall not be copied, translated, stored in database or retrieval system, also can't spread through electronic, copying, record ways.

Thanks for purchasing our product. In order to enable customers to better use the product and reduce the faults caused by misuse, please read the manual carefully and operate it correctly in accordance with the instructions. If users disobey the terms or remove, disassemble, change the components inside of the sensor, we shall not be responsible for the loss.

The specific such as color, appearance, sizes ...etc., please in kind prevail.

We are devoting ourselves to products development and technical innovation, so we reserve the right to improve the products without notice. Please confirm it is the valid version before using this manual. At the same time, users' comments on optimized using way are welcome.

Please keep the manual properly, in order to get help if you have questions during the usage in the future.

Zhengzhou Winsen Electronics Technology CO., LTD

MH-Z14 NDIR CO2 Module

1. Profile

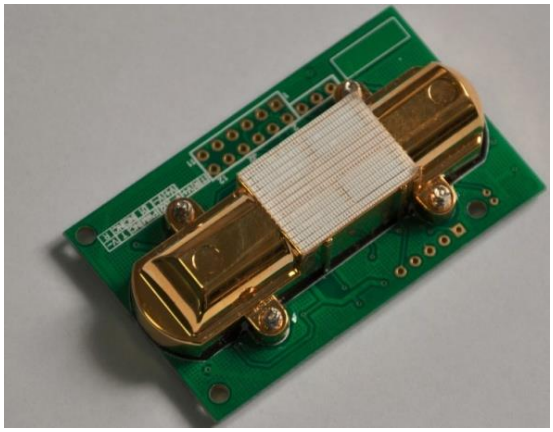

MH-Z14 NDIR Infrared gas module is a common type, small size sensor, using non-dispersive infrared (NDIR) principle to detect the existence of CO_2 in the air, with good selectivity, non-oxygen dependent and long life. Built-in temperature sensor can do temperature compensation; and it has digital output and analog voltage output. This commons type infrared gas sensor is developed by the tight integration of mature infrared absorbing gas detection technology, Precision optical circuit design and superior circuit design.

Its design, production and inspection adhere to below: *GB/T13384-92*

2. Applications:

MH-Z14 NDIR Infrared gas module is applied in the HVAC, indoor air quality monitoring, industrial process, safety and protection monitoring, agriculture and animal husbandry production process monitoring.

3. Main functions and features：

- High sensitivity, High resolution
- Low power consumption
- Output modes: UART, analog voltage signal, PWM wave
- Quick response
- Temperature compensation, excellent linear output
- Good stability
- Long lifespan
- Anti-water vapor interference
- No poisoning

4. Main technical parameters

Working voltage	4.5 V ~ 5.5V DC
Average current	＜ 85 mA
Interface level	3.3 V
Measuring range	0~5%VOL optional
Output signal	PWM
	UART
	0.4-2V DC
Preheat time	3min
Response Time	T_{90} ＜ 90s
Working temperature	0℃ ~ 50℃
Working humidity	0~95%RH
Weight	15 g
Lifespan	>5 year
Dimension	57.5×34.7×16mm（L×W×H）

Target Gas	Measuring Range	Accuracy	Mark
Carbon Dioxide (CO2)	0~2000ppm	±(50ppm +5%reading value)	Temperature compensation
	0~5000ppm		Temperature compensation
	0~1%VOL		Temperature compensation
	0~5%VOL		Temperature compensation

5. Structure

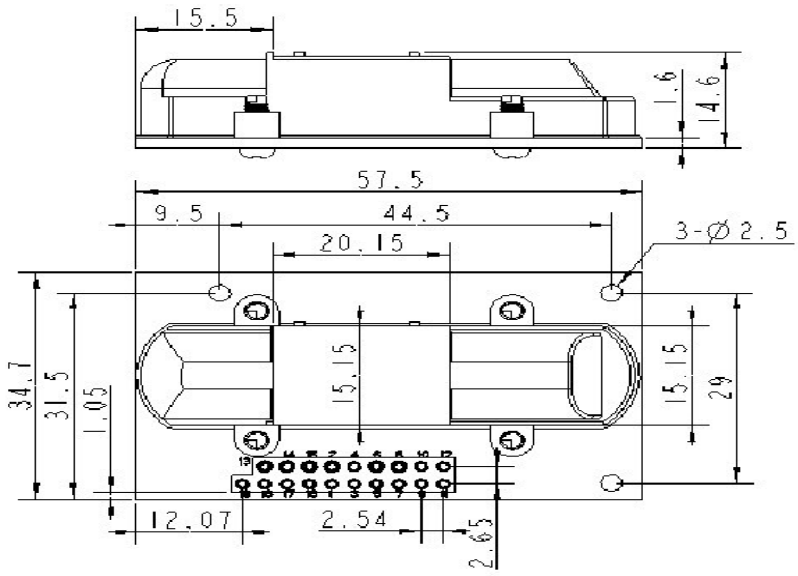

6. Definition for pins

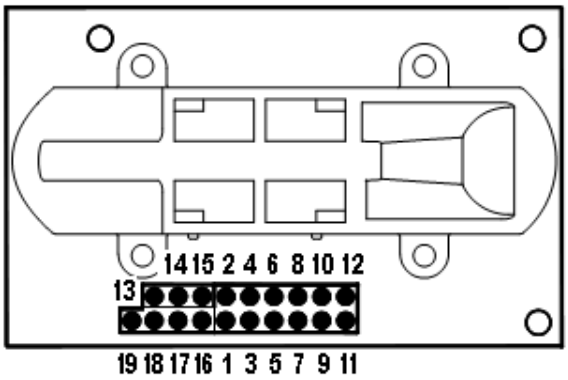

PIN	Description
Pad1/Pad15/Pad17	Vin（input voltage 4.5V～5.5V）
Pad2/Pad3/ Pad12/Pad16	GND
Pad4	Vout2 (0.4～2V)
Pad5	Vout1 (0～2.5V)
Pad6	PWM
Pad8	HD
Pad7/Pad9	NC
Pad11/Pad14/Pad18	UART（RXD） 0～3.3V input digital
Pad10/Pad13/Pad19	UART（TXD） 0～3.3V output digital

7. Circuit

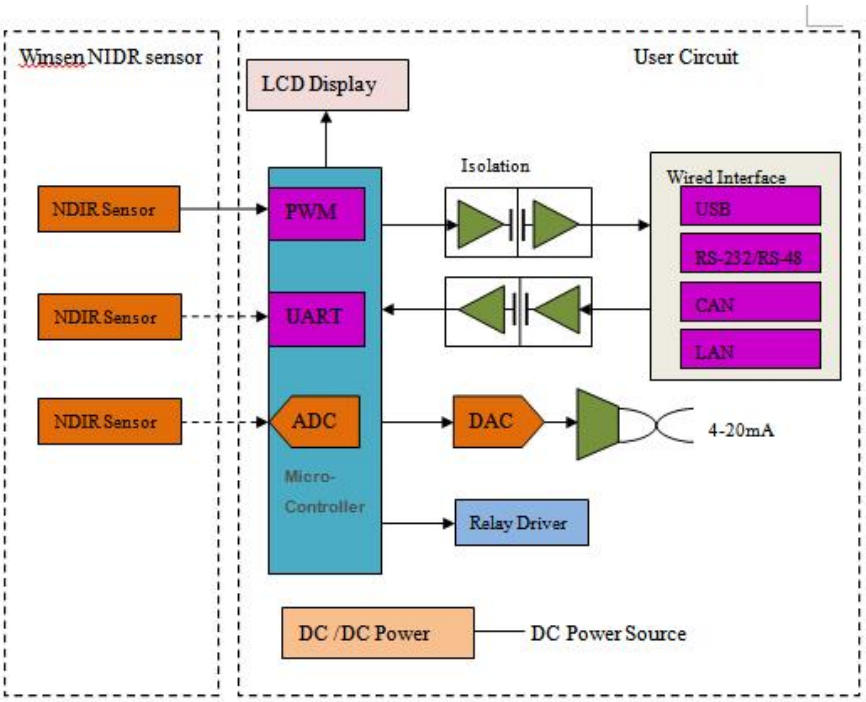

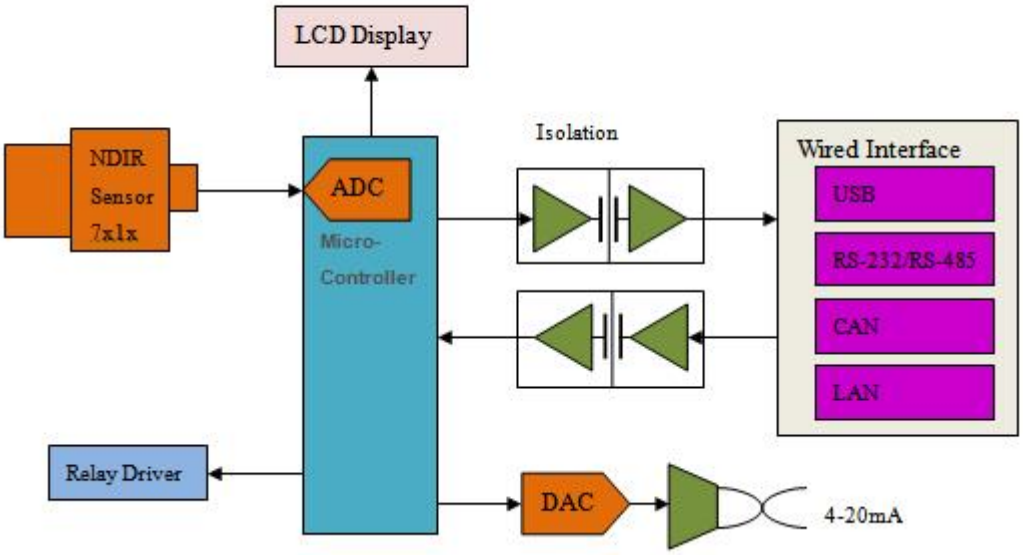

8. Operating instruction

8.1 Analog output connections

The output value of Vout1 is 0-2.5V, which stands for 0 to full range.

The output value of Vout2 is 0.4-2V, which stands for 0 to full range.

Vin –5V

GND- Power Ground

Vout2-ADC input

After preheating, the value of output voltage from Vout2 represents gas concentration.

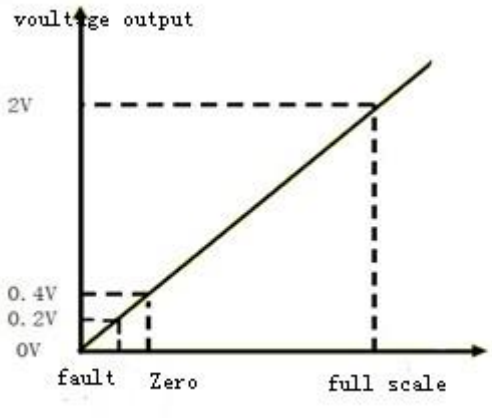

8.2 PWM output (taking PWM output from 2000ppm as example):

CO2 output range: 0ppm-2000ppm

Cycle: 1004ms±5%

High level output for beginning: 2ms (in name)

Middle of cycle: 1000ms±5%

Low level output for ending: 2ms（in name）

Account formula for CO2 concentration which gets through PWM:

$C_{ppm} = 2000 \times (T_H - 2ms) / (T_H + T_L - 4ms)$

Among:

C_{ppm} is calculated CO2 concentration, unit is ppm;

T_H is time for high level during an output cycle;

T_L is time for low level during an output cycle.

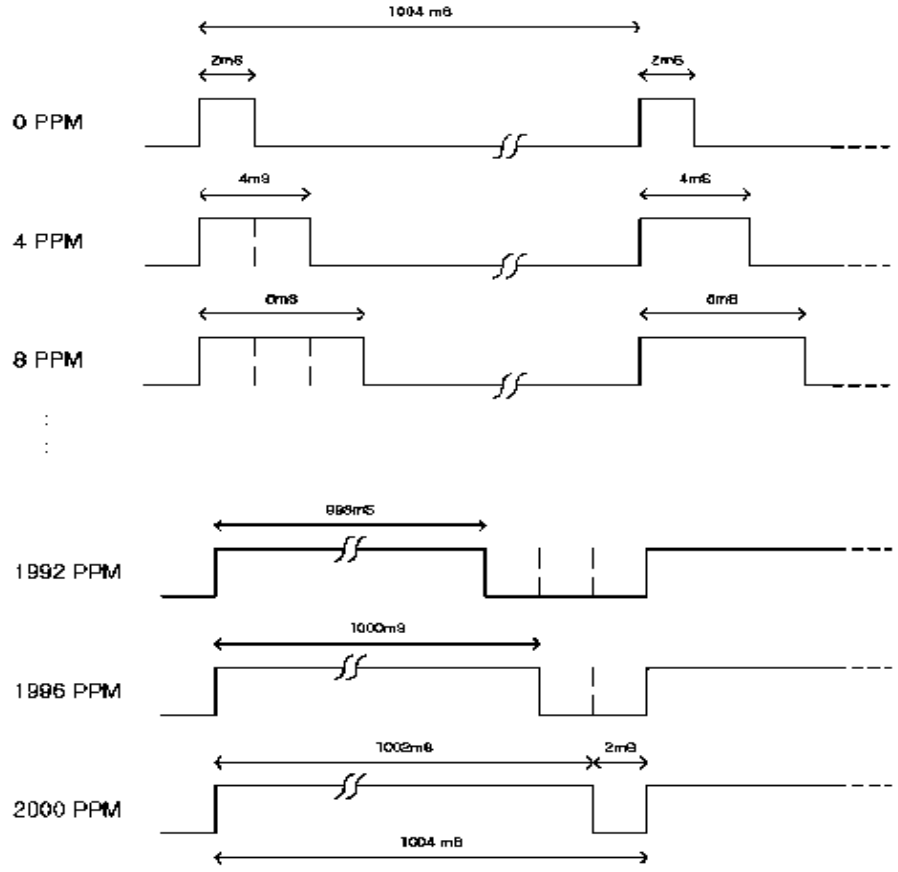

8.3 Digital connects:

Vin-5V power

GND- Power Ground

RXD connect sensor TXD

TXD connect sensor RXD

You can read gas concentration via Uart, no need to calculate.

8.3.1 Communication protocol

1. General Settings

Baud rate	9600
Date byte	8 byte
Stop byte	1byte
Calibrate byte	no

2. Command

Each command or return：
Contains 9 bytes (byte 0 ~ 8)
Starting byte fixed 0 XFF
Command contains sensor number (factory default to 0 x01) to check and end

Command List:

0x86	Gas concentration
0x87	Calibrate zero point（ZERO）
0x88	Calibrate span point（SPAN）

Read gas concentration

Send command								
Byte0	Byte1	Byte2	Byte3	Byte4	Byte5	Byte6	Byte7	Byte8
Starting byte	Sensor No.	command	-	-	-	-	-	Check value
0XFF	0x01	0x86	0x00	0x00	0x00	0x00	0x00	0x79

Return value

Return								
Byte0	Byte1	Byte2	Byte3	Byte4	Byte5	Byte6	Byte7	Byte8
Starting byte	command	High level concentration	Low level concentration	-	-	-	-	Check value
0XFF	0x86	0x02	0x60	0x47	0x00	0x00	0x00	0xD1

Gas concentration= high level *256+low level

Calibrate zero point

Send command								
Byte0	Byte1	Byte2	Byte3	Byte4	Byte5	Byte6	Byte7	Byte8
Starting byte	Sensor No.	command	-	-	-	-	-	Check value
0XFF	0x01	0x87	0x00	0x00	0x00	0x00	0x00	0x78

No return value

Calibrate span point

Send command								
Byte0	Byte1	Byte2	Byte3	Byte4	Byte5	Byte6	Byte7	Byte8
Starting byte	Sensor No.	command	High level span point	Low level span point	-	-	-	Check value
0XFF	0x01	0x88	0x07	0xD0	0x00	0x00	0x00	0xA0

No return value

3. Calibration and calculation

The checksum = (invert (byte 1 +... + 7)) + 1

Reading gas concentration:

Send command								
Byte0	Byte1	Byte2	Byte3	Byte4	Byte5	Byte6	Byte7	Byte8
Starting byte	Sensor No.	command	-	-	-	-	-	Check value
0XFF	0x01	0x86	0x00	0x00	0x00	0x00	0x00	0x79

Except byte 0 , add the other bytes together

0x1 + 0x86 + 0 + 0 + 0 + 0 + 0 = 0x87

Get the value from the first step, and then invert it.

0xff – 0x87 = 0x78

The second value plus one

0x78 + 0x01 = 0x79

Program : C language

```
char getCheckSum(char *packet)
{
    char i, checksum;
    for( i = 1; i < 8; i++)
    {
        checksum += packet[i];
    }
    checksum = 0xff – checksum;
    checksum += 1;
    return checksum;
}
```

9. Notes for maintenance

9.1 The sensor should be calibrated regularly. The cycle time is better to be no more than 6 months.

9.2 Do not use the sensor in the high dusty environment for long time.

9.3 Please use the sensor with correct power supply.

9.4 Forbidden to cut the sensor pin.

Zhengzhou Winsen Electronics Technology Co., Ltd
Add.: NO.299 Jin Suo Road, National Hi-Tech Zone, Zhengzhou, 450001 China
Tel.: 0086-371-67169097 67169670
Fax: +86- 0371-60932988
E-mail:sales@winsensor.com
Website:www.winsen-sensor.com