MICRO ELECTRONICS

MGB31D
MGB31TA
MGB31W

GREEN LED LAMPS

DESCRIPTION

MGB31 Series are green LED lamp with 3mm diameter epoxy package.

MGB31C is green chip with green transparent lens.
MGB31D is green chip with green diffused lens.
MGB31TA is green chip with clear transparent lens.
MGB31W is green chip with clear diffused lens.

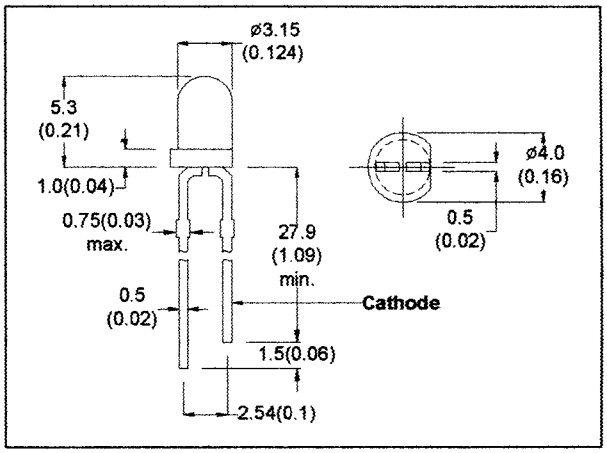

- All Dimension in mm (inch)
- No Scale
- Tol : +/- 0.3mm

ABSOLUTE MAXIMUM RATINGS

Power Dissipation @Ta=25°C	90mW
Forward Current, DC (IF)	30mA
Reverse Voltage	5V
Operating & Storage Temperature Range	-55 to +100°C
Lead Soldering Temperature (1/16" from body)	260°C for 5 sec.

ELECTRO-OPTICAL CHARACTERISTICS (Ta=25℃)

PARAMETER		SYMBOL	MGB31C	MGB31D	MGB31TA	MGB31W	UNIT	CONDITIONS
Forward Voltage	MAX	VF	3.0	3.0	3.0	3.0	V	IF=20mA
Reverse Breakdown Voltage	MIN	BVR	5	5	5	5	V	IR=100 μA
Luminous Intensity	MIN	IV	150	30	150	30	mcd	IF=20mA
	TYP		250	50	250	50	mcd	
Peak Wavelength	TYP	$\lambda\rho$	570	570	570	570	nm	IF=20mA
Spectral Line Half Width	TYP	$\Delta\lambda$	30	30	30	30	nm	IF=20mA
Viewing Angle	TYP	2θ 1/2	40	60	40	60	degree	IF=20mA

MICRO ELECTRONICS LTD.
38, Hung To Road, Microtron Bulding, Kwun Tong, Kowloon, Hong Kong.
Kwun Tong P.O. Box 69477 Hong Kong. Fax No. 2341 0321 Telex:43510 Micro Hx. Tel: 2343 0181-5

Aug-99