

BOURNS®

Features

- Compact design to save board space - 0603 footprint
- Small size results in very fast time to react to fault events
- Low profile
- RoHS compliant* and halogen free**
- Agency recognition:

Applications

- USB port protection
- HDMI 1.4 Source protection
- PC motherboards - Plug and Play protection
- Mobile phones - Battery and port protection
- PDAs / digital cameras

MF-FSMF Series - PTC Resettable Fuses

Electrical Characteristics

Model	V max. Volts	I max. Amps	I_{hold}	I_{trip}	Resistance		Max. Time To Trip		Tripped Power Dissipation
			Amperes at 23 °C		Ohms at 23 °C		Amperes at 23 °C	Seconds at 23 °C	Watts at 23 °C
			Hold	Trip	$R_{Min.}$	$R_{1Max.}$			Typ.
MF-FSMF010X	15	40	0.10	0.30	0.900	6.000	0.50	1.00	0.5
MF-FSMF020X	9	40	0.20	0.50	0.550	3.500	1.00	0.60	0.5
MF-FSMF035X	6	40	0.35	0.75	0.200	1.400	8.00	0.10	0.5
MF-FSMF050X	6	40	0.50	1.00	0.100	0.800	8.00	0.10	0.5

Environmental Characteristics

Operating Temperature ..... -40 °C to +85 °C
Maximum Device Surface Temperature in Tripped State ..... 125 °C
Passive Aging ..... +85 °C, 1000 hours ..... ±5 % typical resistance change
Humidity Aging ..... +85 °C, 85 % R.H. 1000 hours ..... ±5 % typical resistance change
Thermal Shock ..... +85 °C to -40 °C, 20 times ..... ±10 % typical resistance change
Solvent Resistance ..... MIL-STD-202, Method 215 ..... No change
Vibration ..... MIL-STD-883C, Method 2007.1, Condition A ..... No change

Test Procedures And Requirements For Model MF-FSMF Series

Test	Test Conditions	Accept/Reject Criteria
Visual/Mech.	Verify dimensions and materials	Per MF physical description
Resistance	In still air @ 23 °C	Rmin ≤ R ≤ R1max
Time to Trip	At specified current, Vmax, 23 °C	T ≤ max. time to trip (seconds)
Hold Current	30 min. at Ihold	No trip
Trip Cycle Life	Vmax, Imax, 100 cycles	No arcing or burning
Trip Endurance	Vmax, 48 hours	No arcing or burning
Solderability	ANSI/J-STD-002	95 % min. coverage

UL File Number E174545
http://www.ul.com/ Follow link to Certifications, then UL File No., enter E174545
TÜV Certificate Number ..... R 50171531
http://www.tuvdotcom.com/ Follow link to “other certificates”, enter File No. 50171531

Thermal Derating Chart - I_{hold} (Amps)

Model	Ambient Operating Temperature								
	-40 °C	-20 °C	0 °C	23 °C	40 °C	50 °C	60 °C	70 °C	85 °C
MF-FSMF010X	0.13	0.12	0.11	0.10	0.08	0.07	0.06	0.05	0.03
MF-FSMF020X	0.27	0.25	0.23	0.20	0.17	0.14	0.12	0.10	0.07
MF-FSMF035X	0.47	0.41	0.38	0.35	0.29	0.26	0.24	0.20	0.14
MF-FSMF050X	0.67	0.59	0.54	0.50	0.41	0.37	0.34	0.29	0.20

* RoHS Directive 2002/95/EC Jan 27, 2003 including Annex.
** Bourns follows the prevailing definition of “halogen free” in the industry. Bourns considers a product to be “halogen free” if (a) the Bromine (Br) content is 900 ppm or less; (b) the Chlorine (Cl) content is 900 ppm or less; and (c) the total Bromine (Br) and Chlorine (Cl) content is 1500 ppm or less.
Specifications are subject to change without notice.
Customers should verify actual device performance in their specific applications.

Additional Applications

- Automotive electronic control modules
- Game console port protection

MF-FSMF Series - PTC Resettable Fuses

BOURNS®

Product Dimensions

Model	A		B		C		D
	Min.	Max.	Min.	Max.	Min.	Max.	Min.
MF-FSMF010X	1.45 (0.057)	1.85 (0.073)	0.65 (0.026)	1.05 (0.041)	0.30 (0.012)	0.65 (0.026)	0.20 (0.008)
MF-FSMF020X	1.45 (0.057)	1.85 (0.073)	0.65 (0.026)	1.05 (0.041)	0.30 (0.012)	0.65 (0.026)	0.20 (0.008)
MF-FSMF035X	1.45 (0.057)	1.85 (0.073)	0.65 (0.026)	1.05 (0.041)	0.30 (0.012)	0.65 (0.026)	0.20 (0.008)
MF-FSMF050X	1.45 (0.057)	1.85 (0.073)	0.65 (0.026)	1.05 (0.041)	0.65 (0.026)	1.00 (0.039)	0.20 (0.008)

Packaging: MF-FSMF010X = 5000 pcs. per reel;
MF-FSMF020X & MF-FSMF035X = 6000 pcs. per reel;
MF-FSMF050X = 4000 pcs. per reel

DIMENSIONS: MM / (INCHES)

Top View *Bottom View* *Side View* *Recommended Pad Layout*

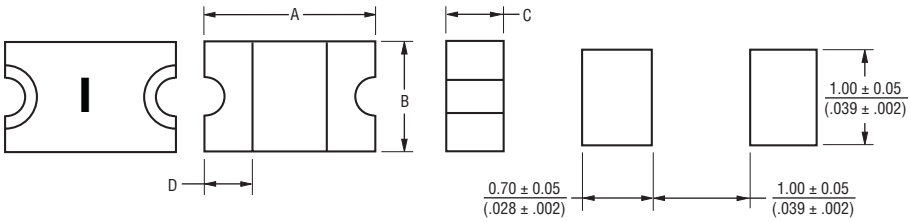

Terminal material:
Nickel/gold plated.

Termination pad solderability:
Standard Au finish:
Meets ANSI/J-STD-002 Category 2.

Recommended Storage:
40 °C max./70 % RH max.

Solder Reflow Recommendations

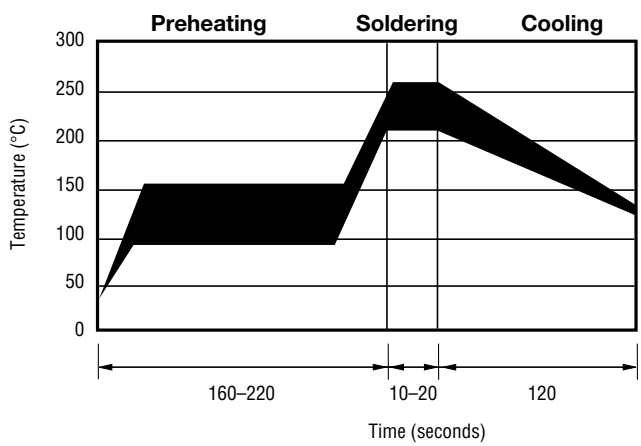

Notes:

- MF-FSMF models cannot be wave soldered. Please contact Bourns for hand soldering recommendations.
- If reflow temperatures exceed the recommended profile, devices may not meet the performance requirements.
- Compatible with Pb and Pb-free solder reflow profiles.
- Excess solder may cause a short circuit, especially during hand soldering. Please refer to the Multifuse® Polymer PTC Soldering Recommendation guidelines.

How To Order

MF - FSMF 020 X - 2

Multifuse® Product Designator

Series
FSMF = 0603 Surface Mount Component

Hold Current, Ihold
010-050 (0.10 - 0.50 Amps)

Multifuse® freeXpansion™ Design

Packaging
Packaged per EIA 481-1
-2 = Tape and Reel

Typical Part Marking

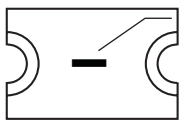

PART IDENTIFICATION:
MF-FSMF010X = II
MF-FSMF020X = I
MF-FSMF035X = •
MF-FSMF050X = —

BIWEEKLY DATE CODE WILL APPEAR ON THE PACKAGING LABEL:
WEEK 1 AND 2 = A
WEEK 51 AND 52 = Z

"freeXpansion Design" is a trademark of Bourns, Inc.
Specifications are subject to change without notice.
Customers should verify actual device performance in their specific applications.

Typical Time to Trip at 23 °C

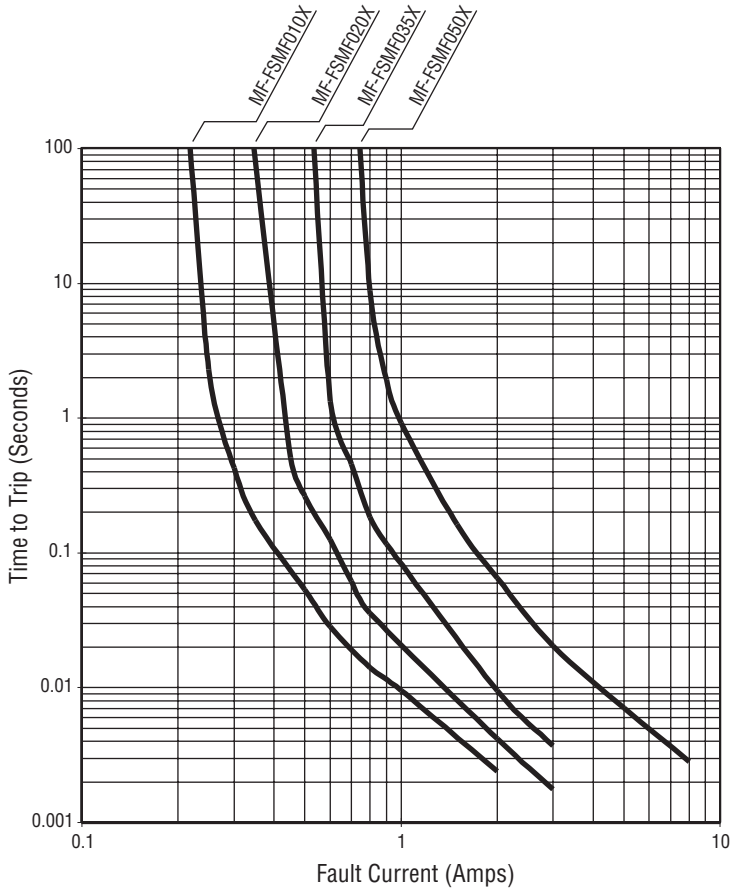

The Time to Trip curves represent typical performance of a device in a simulated application environment. Actual performance in specific customer applications may differ from these values due to the influence of other variables.

BOURNS®

Asia-Pacific: Tel: +886-2 2562-4117 • Fax: +886-2 2562-4116
Europe: Tel: +41-41 768 5555 • Fax: +41-41 768 5510
The Americas: Tel: +1-951 781-5500 • Fax: +1-951 781-5700
www.bourns.com

Specifications are subject to change without notice.
Customers should verify actual device performance in their specific applications.

MF-FSMF Series Tape and Reel Specifications

BOURNS®

Product Dimensions

Tape Dimensions	MF-FSMF010X per EIA 481-1	MF-FSMF020X, MF-FSMF035X per EIA 481-1	MF-FSMF050X per EIA 481-1
W	8.0 ± 0.1 (0.315 ± 0.004)	8.0 ± 0.1 (0.315 ± 0.004)	8.0 ± 0.1 (0.315 ± 0.004)
P_0	4.0 ± 0.1 (0.157 ± 0.004)	4.0 ± 0.1 (0.157 ± 0.004)	4.0 ± 0.1 (0.157 ± 0.004)
P_1	4.0 ± 0.05 (0.157 ± 0.002)	4.0 ± 0.05 (0.157 ± 0.002)	4.0 ± 0.05 (0.157 ± 0.002)
P_2	2.0 ± 0.05 (0.079 ± 0.002)	2.0 ± 0.05 (0.079 ± 0.002)	2.0 ± 0.05 (0.079 ± 0.002)
A_0	1.17 ± 0.05 (0.046 ± 0.002)	1.17 ± 0.05 (0.046 ± 0.002)	1.17 ± 0.05 (0.046 ± 0.002)
B_0	2.02 ± 0.05 (0.079 ± 0.002)	2.02 ± 0.05 (0.079 ± 0.002)	2.02 ± 0.05 (0.079 ± 0.002)
D_0	1.55 ± 0.05 (0.061 ± 0.002)	1.55 ± 0.05 (0.061 ± 0.002)	1.55 ± 0.05 (0.061 ± 0.002)
F	3.5 ± 0.05 (0.138 + 0.002)	3.5 ± 0.05 (0.138 + 0.002)	3.5 ± 0.05 (0.138 + 0.002)
E_1	1.75 ± 0.1 (0.069 ± 0.004)	1.75 ± 0.1 (0.069 ± 0.004)	1.75 ± 0.1 (0.069 ± 0.004)
T	0.75 ± 0.05 (0.030 ± 0.002)	0.60 ± 0.05 (0.024 ± 0.002)	0.95 ± 0.05 (0.037 ± 0.002)
10 P_0	40.0 ± 0.1 (1.575 ± 0.004)	40.0 ± 0.1 (1.575 ± 0.004)	40.0 ± 0.1 (1.575 ± 0.004)
Reel Dimensions			
A max.	185 (7.283)	185 (7.283)	185 (7.283)
N min.	50 (1.97)	50 (1.97)	50 (1.97)
W_1	8.4 + 1.5/ -0.0 (0.331 + 0.059/-0)	8.4 + 1.5/ -0.0 (0.331 + 0.059/-0)	8.4 + 1.5/ -0.0 (0.331 + 0.059/-0)
W_2 max.	14.4 (0.567)	14.4 (0.567)	14.4 (0.567)

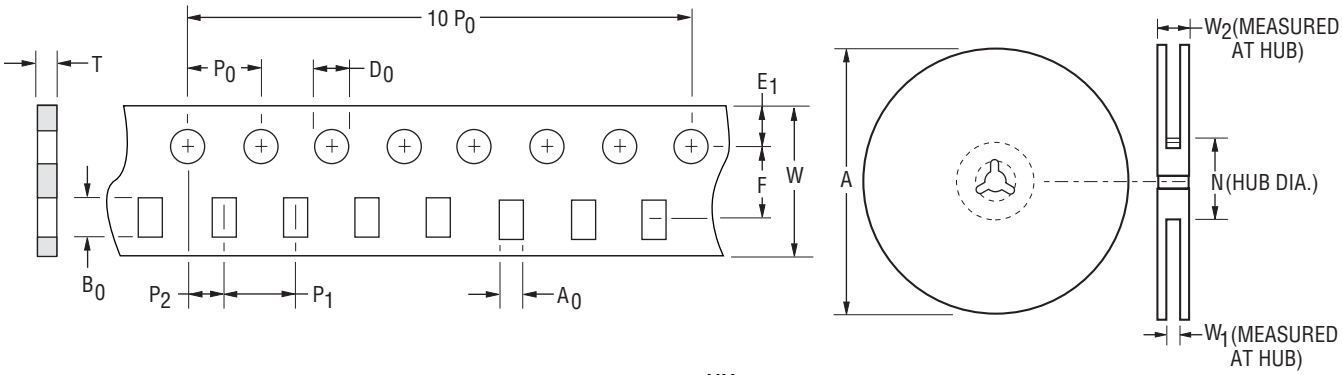

DIMENSIONS: MM (INCHES)

Specifications are subject to change without notice.
Customers should verify actual device performance in their specific applications.