DB LECTRO
COMPOSANTS ÉLECTRONIQUES
ELECTRONIC COMPONENTS

MEF

RoHS

Metalized Polyester Capacitor

FEATURE:

High moisture resistance.
Good solder ability.
Non-inductive construction and self-healing property.

MEF are constructed with metalized polyester film dielectric, copper ply lead and epoxy resin coating. They are suitable for blocking, coupling, filtering, bypass timing circuit and ideal for use in telecommunication equipment, data processing equipment, industrial instruments, automatic control system.

SPECIFICATION:

	Parameter	Rating
1.	Operating temperature	-40 ~ +85℃
2.	Capacitance range	0.01 ~ 10uF
3.	Capacitance tolerance	±5%(J), ±10%(K), ±20%(M)
4.	Rated voltage	100, 250, 400, 630 VDC
5.	Dissipation factor (DF)	1.0% maximum
6.	Insulation resistance (IR)	>15000MΩ (C≦0.33uF) >5000MΩ·uF(C>0.33uF)
7.	Dielectric strength	150% of rated voltage for 5 seconds

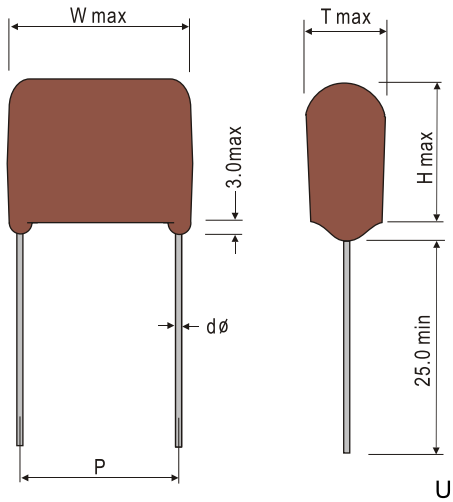

DIMENSIONS:

UNIT: mm

SIZE / CAP	100VDC					250VDC					400VDC					630VDC				
	W	H	T	P	d φ ±0.05	W	H	T	P	d φ ±0.05	W	H	T	P	d φ ±0.05	W	H	T	P	d φ ±0.05
.01	13.0	10.0	5.5	10.0	0.6	13.0	10.0	5.5	10.0	0.6	13.0	10.0	5.5	10.0	0.6	13.0	10.5	6.0	10.0	0.6
.015	13.0	10.0	5.5	10.0	0.6	13.0	10.0	5.5	10.0	0.6	13.0	10.0	6.0	10.0	0.6	13.0	11.0	6.5	10.0	0.6
.022	13.0	10.0	5.5	10.0	0.6	13.0	10.0	5.5	10.0	0.6	13.0	10.0	6.0	7.5	0.6	13.0	11.0	6.5	10.0	0.6
.022	13.0	10.0	5.5	10.0	0.6	13.0	10.0	5.5	10.0	0.6	13.0	10.0	6.0	10.0	0.6	13.0	11.0	6.5	10.0	0.6
.033	13.0	10.0	5.5	10.0	0.6	13.0	10.0	5.5	10.0	0.6	13.0	11.0	6.5	10.0	0.6	13.0	12.0	7.0	10.0	0.6
.047	13.0	10.0	5.5	10.0	0.6	13.0	10.0	5.5	10.0	0.6	13.0	11.5	7.0	10.0	0.6	18.0	10.0	6.0	15.0	0.8
.068	13.0	11.0	5.5	10.0	0.6	13.0	11.0	5.5	10.0	0.6	18.0	10.5	6.0	14.0	0.8	18.0	14.0	8.0	15.0	0.8
.1	13.0	12.5	5.5	10.0	0.6	13.0	12.5	5.5	10.0	0.6	18.0	11.5	6.5	15.0	0.8	18.0	15.0	9.5	15.0	0.8
.15	13.0	12.5	8.0	10.0	0.6	13.0	12.5	8.0	10.0	0.6	18.0	14.0	8.0	15.0	0.8	24.0	14.0	9.5	20.0	0.8
.22	13.0	12.5	8.0	10.0	0.6	18.0	13.0	7.0	15.0	0.8	18.0	15.0	9.5	15.0	0.8	24.0	16.5	10.5	20.0	0.8
.33	18.0	12.5	8.0	10.0	0.8	18.0	14.0	8.0	15.0	0.8	18.0	16.5	10.0	20.0	0.8	30.0	17.5	11.0	27.5	0.8
.47	18.0	12.5	8.0	10.0	0.8	18.0	16.0	9.5	15.0	0.8	24.0	17.5	10.5	20.0	0.8	30.0	22.5	12.5	27.5	0.8
.68	18.0	13.5	8.0	15.0	0.8	24.0	14.0	9.5	20.0	0.8	30.0	17.5	10.5	27.5	0.8	30.0	23.5	14.0	27.5	0.8
1.0	18.0	16.5	9.5	15.0	0.8	24.0	18.0	10.5	20.0	0.8	30.0	21.5	12.0	27.5	0.8	30.0	23.5	14.0	27.5	0.8
1.2	24.0	16.0	9.0	20.0	0.8	24.0	19.5	10.0	20.0	0.8	31.5	24.0	14.0	27.5	0.8					
1.5	24.0	19.0	15.5	20.0	0.8	30.0	23.0	13.5	27.5	0.8	30.0	24.0	14.0	27.5	0.8					
2.2	24.0	21.0	12.5	20.0	0.8	30.0	23.0	13.5	27.5	0.8	30.0	26.0	15.5	27.5	0.8					
3.3	24.0	22.0	13.0	20.0	0.8	30.0	24.0	16.5	27.5	0.8	30.0	26.0	15.5	26.5	0.8					
4.7	30.0	23.5	14.0	27.5	0.8	30.0	24.0	16.5	27.5	0.8										
6.8	30.0	24.0	15.5	27.5	0.8	30.0	24.0	16.5	27.5	0.8						P	10	15	20	27.5
10	30.0	26.0	21.5	27.5	0.8											TOL	±1.0	±1.0	±1.5	±1.5

DB LECTRO Inc. 3755 Place Java, Suite 140, Brossard, Québec, J4Y 0E4, Canada - T: 1-450-444-1424 / F: 1-450-444-4714 / www.dblectro.com