Chlorine Gas Sensor

（Model：ME4-Cl_2）

Manual

Version: 1.2

Valid from: 2014-05-01

Zhengzhou Winsen Electronics Technology Co., Ltd

Statement

This manual copyright belongs Zhengzhou Winsen Electronics Technology Co., LTD. Without the written permission, any part of this manual shall not be copied, translated, stored in database or retrieval system, also can't spread through electronic, copying, record ways.

Thanks for purchasing our product. In order to let customers use it better and reduce the faults caused by misuse, please read the manual carefully and operate it correctly in accordance with the instructions. If users disobey the terms or remove, disassemble, change the components inside of the sensor, we shall not be responsible for the loss.

The specific such as color, appearance, sizes &etc, please in kind prevail.

We are devoting ourselves to products development and technical innovation, so we reserve the right to improve the products without notice. Please confirm it is the valid version before using this manual. At the same time, users' comments on optimized using way are welcome.

Please keep the manual properly, in order to get help if you have questions during the usage in the future.

Zhengzhou Winsen Electronics Technology CO., LTD

ME4-Cl_2 Chlorine Gas Sensor

Profile

ME4-Cl_2 chlorine gas sensor is constant potential electrolysis type. Oxidation-reduction reaction with chlorine gas and oxygen take place respectively on the working electrode and on the counter electrode. The process releases electric charge and generates current. The current is in direct proportion to the concentration of chlorine gas and conform to faraday's law. So the concentration of the target gas could be got by measuring the value of current.



Features

Low power consumption, high precision, high sensitivity, wide linear range, good anti-interference ability, excellent repeatability and stability.

Main applications

It is used for chlorine gas detection in the occasions such as chemical engineering, medicine and environmental protection field.

Technical Parameters Stable1.

Detection Gas	Chlorine Gas（Cl_2）
Detection Range	0～20ppm
Max range	250ppm
Sensitivity	（1±0.25）μA/ppm
Resolution	0.1ppm
Response Time(T_{90})	≤60S
Bias Voltage	0mV
Load Resistance	10Ω(recommended)
Repeatability	＜2％ Output value
Stability(/month)	＜2％
Output Linearity	Linear
Zero drift(-20℃～40℃)	≤0.2ppm
Temperature range	-20℃～50℃
Humidity range	15％～90％RH No condensation
Pressure range	standard atmospheric pressure ±10％
Lifespan	2 years

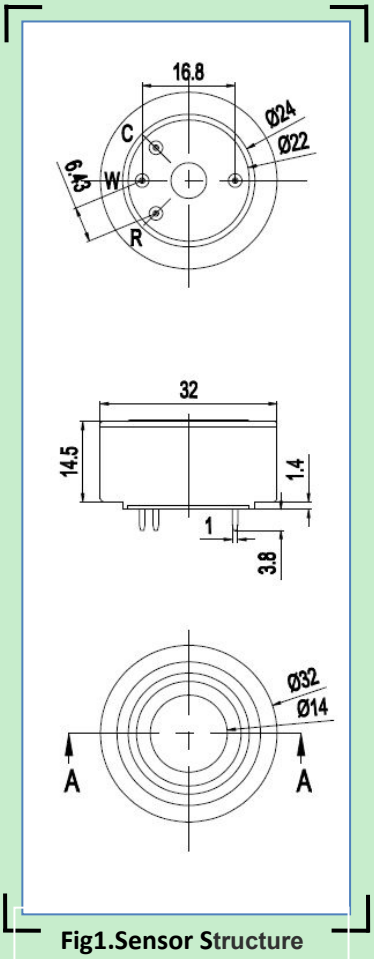

Fig1.Sensor Structure

Basic Circuit

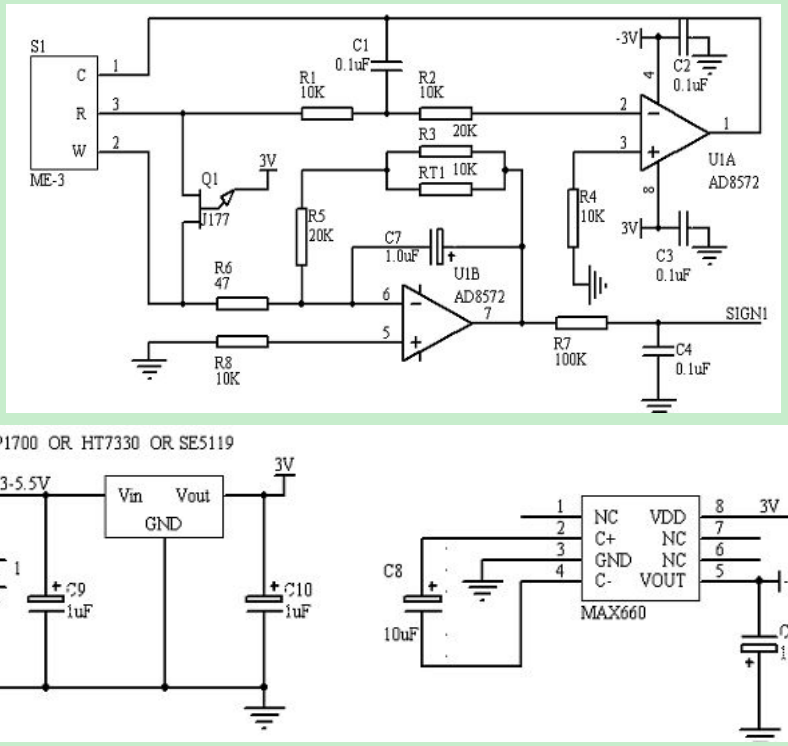

Fig2: ME4-Cl_2 test circuit

Description of sensor characters

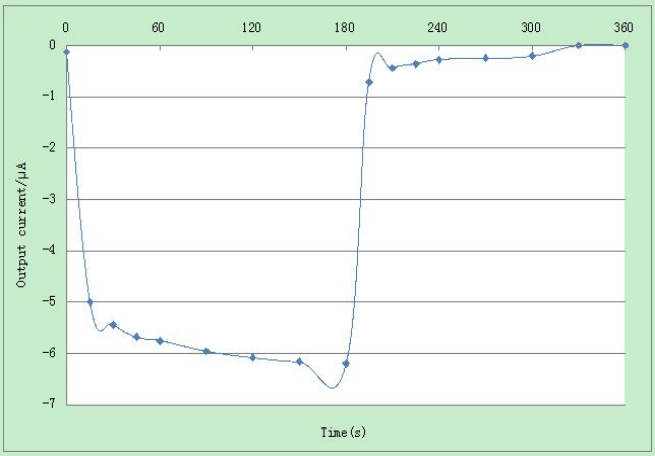

Fig3.Responce and Resume

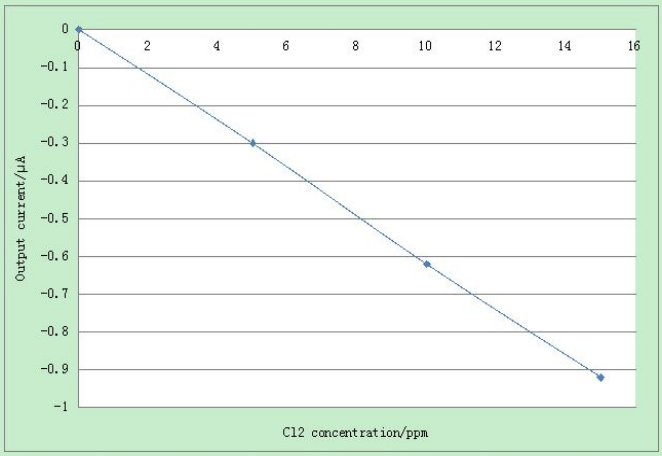

Fig4.Linearity

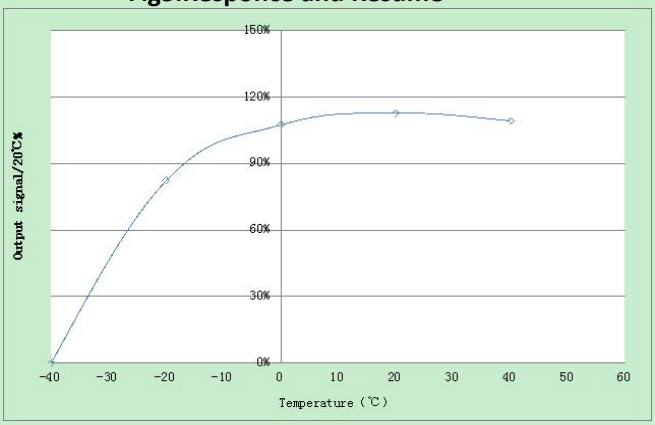

Fig5.Output of sensor at different temperature

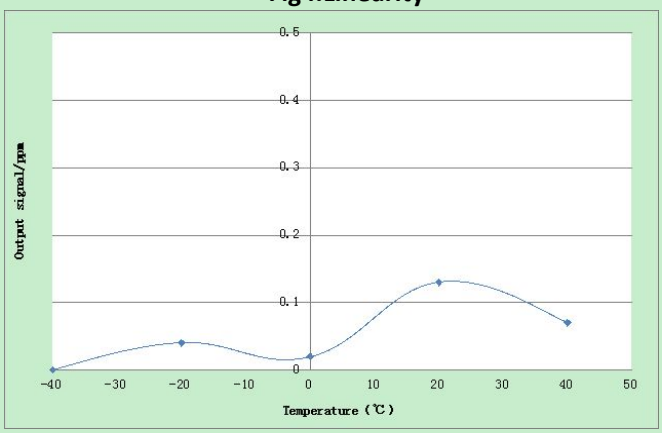

Fig6.Zero output of sensor at different temperature

Cross Interference

ME4-Cl_2 sensor also can respond to other gases besides target gas Cl_2. Following data are the response characteristics of the sensor to interferential gases at certain concentration for your reference.

Stable2. Cross interference

Interferential Gas	Concentration/ppm	ME4-Cl_2/ppm
H_2S	15	＜-3
CO	200	0
NO	35	0
SO_2	5	0
HCN	10	0
H_2	400	0.1
C_2H_4	400	0.1
HCl	5	0
CO_2	5%	0
NH_3	20	0.1

Cautions!

- Tin soldering is prohibited.
- Before using, power on to aging for more than 48 hours is necessary.
- Pins can't be broke off or bent.
- Don't disassemble the sensor to avoid the damage caused by electrolyte leakage.
- Avoid contacting organic solvent (including Silicone rubber and other adhesive), coatings, medicine, oil and high concentration gases.
- All the electrochemical sensors shall not be encapsulated completely by resin materials, and shall not immerse in pure oxygen environment, otherwise, it will damage the function of sensor
- All electrochemical sensors shall not be applied in corrosive gas environment, or the sensor will be damaged
- Zero calibration should be finished in clean air.
- During test and usage, sensors should avoid the gas inflow vertically
- The side for inflow can't be choked and polluted.
- The laminating film above the sensor surface can't be uncovered and damage.
- Excessive impact or vibration should be avoided
- It takes some time for the sensor to return to normal state after it is applied in high

concentration gas

- Working electrode and reference electrode of the sensor shall be in short circuit when stored
- Prohibit to use the hot cement or sealant of which the curing temperature is higher than80℃ to make the capsulation for the sensor.
- Prohibit storage and usage for long time in alkaline gases with high concentration.
- Do not use the sensor when the shell is damaged

Zhengzhou Winsen Electronics Technology Co., Ltd
Add.: NO.299 Jin Suo Road, National Hi-Tech Zone, Zhengzhou, 450001 China
Tel.: 0086-371-67169097 67169670
Fax:0371-60932988
E-mail:sales@winsensor.com