Single Phase Bridge Rectifier, 110 Amps

Features

- Easy connections
- Excellent power volume ratio
- Insulated type

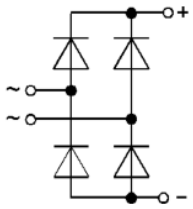

MDQ





Voltage Ratings (T_J = 25°C unless otherwise noted)				
Type number	**Voltage code**	**V_{RRM}, Max. repetitive peak reverse voltage (V)**	**V_{RSM}, Max. non-repetitive peak reverse voltage (V)**	**I_{RRM} max @ T_J max (mA)**
MDQ110	80	800	900	10
	100	1000	1100	
	120	1200	1300	
	140	1400	1500	
	160	1600	1700	

Electrical Specifications (T_J = 25°C unless otherwise noted)				
Parameters	**Conditions**	**Symbol**	**Values**	**Units**
Maximum DC output current	T_C = 85°C	I_{DC}	110	A
Forward surge current (non-repetitive), one cycle	f = 50 Hz	I_{FSM}	1200	A
Fusing current		I^2t	7200	A^2s
Maximum forward voltage drop	I_{FM} = 110A, T_J = 25 °C	V_{FM}	1.3	V
RMS isolation voltage		V_{ISO}	3000	V

Thermal and Mechanical Specifications (T_J = 25°C unless otherwise noted)				
Parameters		**Symbol**	**Values**	**Units**
Maximum operating junction temperature range		T_J	- 40 to + 150	°C
Maximum storage temperature range		T_{STG}	- 40 to + 150	°C
Maximum thermal resistance, junction to case		$R_{th(J-C)}$	0.14	°C/W
Mounting torque	to heatsink	F	4 ± 15%	Nm
	to terminal		4 ± 15%	
Approximate weight		W	180	g

D-95, Sector 63, Noida – 201301, India • Tel: 0120-4205450 • Fax: 0120-4273653
sales@nainasemi.com • www.nainasemi.com

Package Outline

(All dimensions in mm)

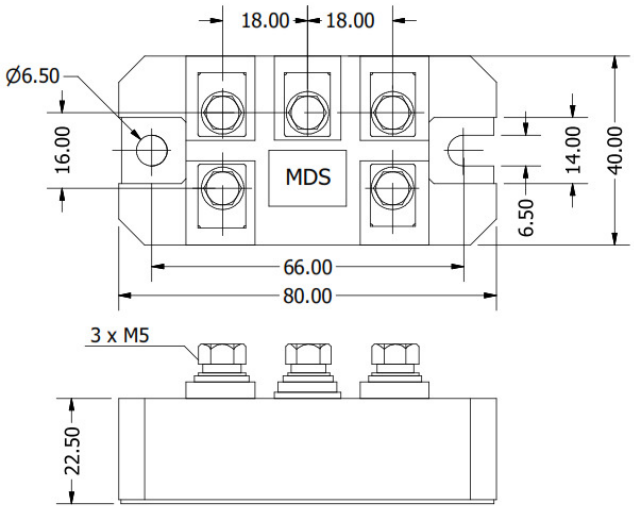

Package Type	D

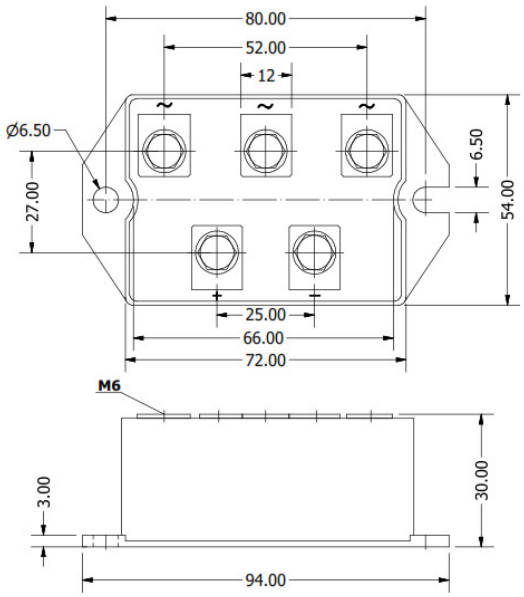

Package Type	S

Ordering Table

MDQ	*110*	*-*	*120*
1	2	3	4

1 – Single-Phase Bridge
2 – Current = I_D
3 – Package Type
4 – Voltage Code x 10 = V_{RRM} (See Voltage Ratings Table)

D-95, Sector 63, Noida – 201301, India • Tel: 0120-4205450 • Fax: 0120-4273653
sales@nainasemi.com • www.nainasemi.com