Stellaris® MDL-BDC24 Brushed DC Motor Control Module

Getting Started Guide

MDL-BDC24-GSG-05

Copyright © 2009–2012 Texas Instruments

Copyright

Copyright © 2009–2012 Texas Instruments, Inc. All rights reserved. Stellaris and StellarisWare are registered trademarks of Texas Instruments. ARM and Thumb are registered trademarks, and Cortex is a trademark of ARM Limited. Other names and brands may be claimed as the property of others.

Texas Instruments
108 Wild Basin, Suite 350
Austin, TX 78746
http://www.ti.com/stellaris







Table of Contents

Chapter 1: Introduction to Jaguar 5
Features 7
Differences between the MDL-BDC24 and MDL-BDC 8
Warnings 8

Chapter 2: General Operation 9
Operating Modes 10
Fault Conditions 10
Coast/Brake Jumper 11
Power and Motor Wiring 11
Automatic Ramp Mode 11

Chapter 3: Servo/PWM-based Control 13
Servo-Style PWM Speed Control Input 13
Calibrating the PWM Input 13

Chapter 4: Introduction to Network-Based Control 15
Network Security and System Safety 15
Trusted Mode (FIRST Robotics Competition feature) 15

Chapter 5: Operation using the RS232 Interface 16
BDC-COMM Application Overview 16

Chapter 6: Firmware Update Using BDC-COMM 18
Important Information 18
Step 1: Hardware Setup 18
Step 2: Run BDC-COMM 19
Step 3: Assign Unique CAN ID 19
Step 4: Update Firmware 19

Chapter 7: Closed-Loop Control Options 20
Wiring 20
Constant Current Control 21
Position Control using an Encoder 21
Position Control Using a Potentiometer 22
Speed Control 22

Chapter 8: Operation Using the CAN Interface 23
CAN IDs 23
CAN Network 23
Control Options for Networked Jaguar Modules 24

Appendix A: Jaguar Communication Cables 25
CAN Terminator 25
CAN Cable 25
CAN Cable Assembly 26
CAN Cable Pin Assignments 26

RS232 Cable 26
RS232 Cable Assembly 26
RS232 Cable Pin Assignments 27
External References 27

C H A P T E R 1

Introduction to Jaguar

Texas Instruments presents the next generation FIRST Robotics Competition (FRC) motor controller: the MDL-BDC24 brushed DC motor control (also known as Black Jaguar). The MDL-BDC24 builds on the success of the first-generation MDL-BDC (Gray Jaguar) by adding an RS232-to-CAN gateway and enhanced electrical performance. Designed specifically for the FRC competition, the MDL-BDC and MDL-BDC24 modules facilitate the design of complex robots within the short six-week FRC build period.

This document provides a complete description of how to use Jaguar in both Networked and Servo control modes. Information applies to both the MDL-BDC and MDL-BDC24 models except where noted. Additional information can be found in the MDL-BDC and MDL-BDC24 data sheets, as well as in related application notes.

Figure 1-1. Next Generation Brushed DC Motor Control Module, MDL-BDC24



The flowchart in Figure 1-2 provides an overview of the process of developing with the MDL-BDC24 and MDL-BDC modules. We suggest checking off each step as it is completed.

Figure 1-2. MDL-BDC24 Development Process

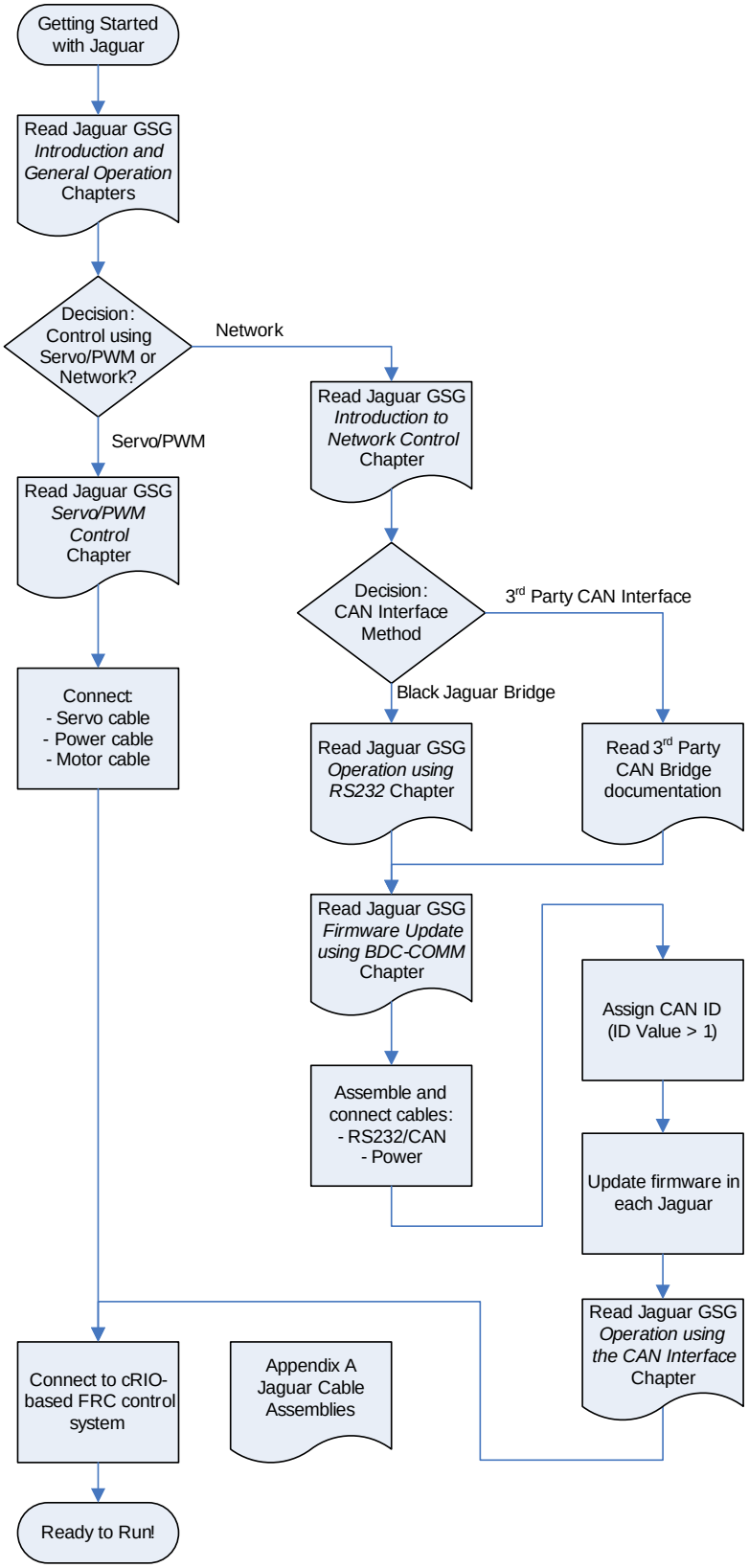

Features

The Stellaris® Brushed DC Motor Control Module with CAN (MDL-BDC24) offers a variable speed control for 12 V and 24 V brushed DC motors at up to 40 A continuous current. The motor control module includes high performance Controller Area Network (CAN) connectivity and a rich set of control options and sensor interfaces, including analog and quadrature encoder interfaces. The high-frequency PWM on the MDL-BDC24 enables DC motors to run smoothly and quietly over a wide speed range. The module uses highly optimized software and a powerful 32-bit Stellaris® microcontroller to implement open-loop speed control as well as closed-loop control of speed, position, or motor current.

The MDL-BDC24 provides the following features:

- Quiet control of brushed DC motors
  - 15 kHz PWM frequency
- Three options for Speed control
  - Industry-standard R-C servo type (PWM) interface
  - Controller Area Network (CAN) interface
  - RS232 serial interface
- CAN communication
  - Multicast shared serial bus for connecting systems in electromagnetically noisy environments
  - 1M bits/s bit rate
  - CAN protocol version 2.0 B
  - Full configurability of module options
  - Real-time monitoring of current, voltage, speed, and other parameters
  - Firmware update
- RS232 serial communication
  - Bridges RS232 port to a CAN network
  - Directly interfaces to a PC serial port or National Instruments cRIO
- Automatic Output Ramp mode
- Status LED indicates Run, Direction, and Fault conditions
- Motor brake/coast selector
- Limit switch inputs for forward and reverse directions
- Quadrature encoder input (QEI)
  - Index input
  - 5 V supply output to encoder
- Analog input
  - Accepts 10 kΩ potentiometer or 0-3 V input
- Screw terminals for all power wiring
- Headers (0.1 inch pitch) for all control signals

Differences between the MDL-BDC24 and MDL-BDC

First generation Jaguar motor controls (MDL-BDC) have similar capabilities to the second generation Jaguar (MDL-BDC24). Functional differences are summarized in Table 1-1.

Table 1-1. MDL-BDC24 and MDL-BDC Differences

Feature	MDL-BDC24 (Black) 	MDL-BDC (Gray)[a] 
Plastic enclosure	Black with red Texas Instruments logo	Gray with orange Luminary Micro logo
Control interfaces	• Servo-style PWM • CAN (one 6P6C and one 6P4C connector) • RS232 serial port (the outside two pins of the 6P6C connector)	• Servo-style PWM • CAN (dual 6P4C connectors)
Input voltage range across V+/V- inputs	6–30 V This allows the use of 24-V motors	6–15 V
H-Bridge	Uses synchronous rectification	Does not use synchronous rectification
Terminal screws	These screws are intended to be removed.	These screws should not be removed. If removed, the screw leaves metal shavings inside the motor controller assembly which increases the risk of the unit's failure.

a. MDL-BDC not recommended for new designs.

Internally, the MDL-BDC24 is a completely new design that makes use of switching converters and synchronous rectification to improve overall energy efficiency.

Software should be updated to the latest version to ensure that all capabilities of the MDL-BDC24 or MDL-BDC module are enabled and functional.

Warnings

WARNING – Be aware of the following warnings. Failure to heed warnings can result in damage to the module or invalidation of the module warranty.

- Mount the Jaguar module so that the vents in the top and sides of the unit are not restricted in any way. Maintain a clearance of at least ½ inch between modules.
- Reverse wiring is unprotected; doing so voids the Jaguar module's warranty.
- Do not exceed the absolute maximum supply voltage (30 V_{DC} for MDL-BDC24, 13 V for MDL-BDC). Doing so causes permanent damage to the module.
- Protect Jaguar from all situations where debris could enter through ventilation slots or connector openings.

CHAPTER 2

General Operation

This chapter describes the general operation of the MDL-BDC24 motor control module. Figure 2-1 shows the key features of the MDL-BDC24 motor control. Table 2-1 provides a key to the status LED.

Figure 2-1. MDL-BDC24 Key Features

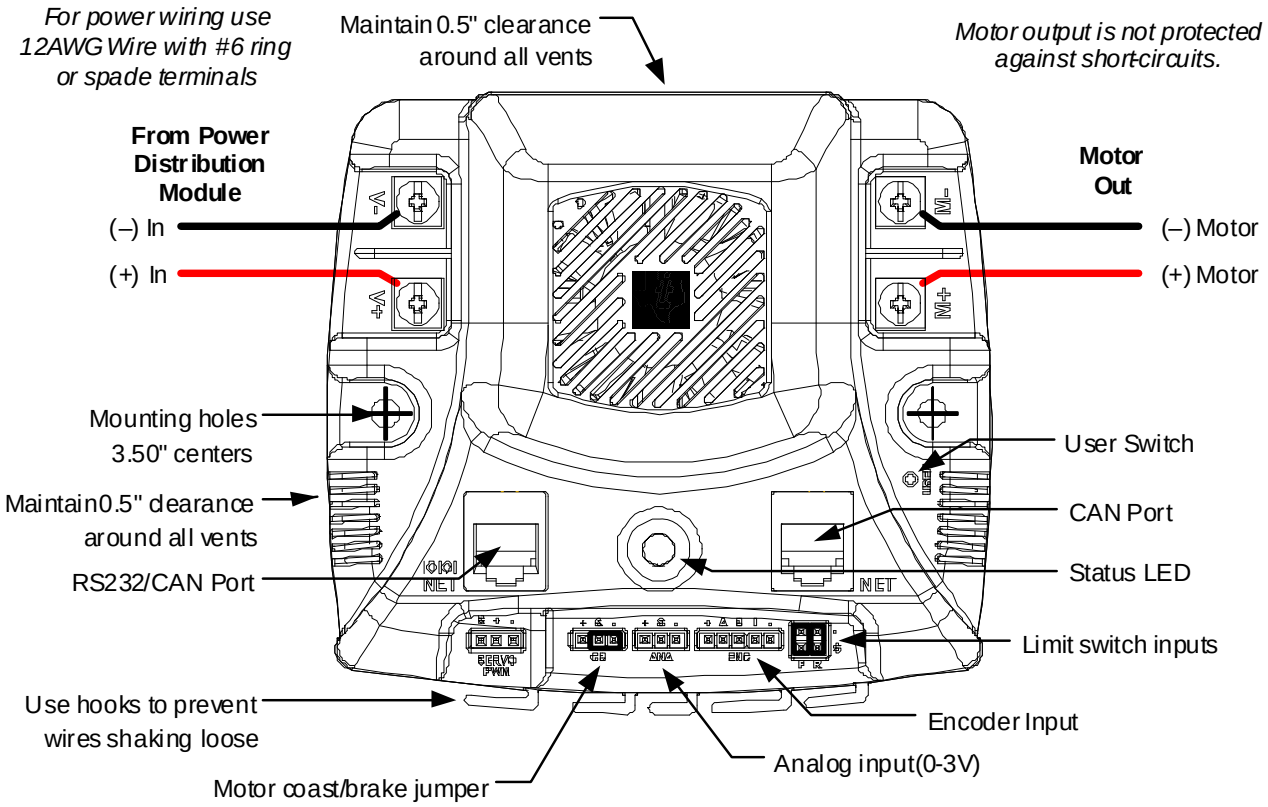

Table 2-2. Status LED

LED State	Module Status
Normal Operating Conditions	
Solid Yellow	Neutral (speed set to 0)
Fast Flashing Green	Forward
Fast Flashing Red	Reverse
Solid Green	Full-speed forward
Solid Red	Full-speed reverse
Fault Conditions	
Slow Flashing Yellow	Loss of servo or Network link
Fast Flashing Yellow	Invalid CAN ID

Table 2-2. Status LED (Continued)

LED State	Module Status
Slow Flashing Red	Voltage, Temperature, or Limit Switch fault condition
Slow Flashing Red and Yellow	Current fault condition
Calibration Conditions	
Fast Flashing Red and Green	Calibration mode active
Fast Flashing Red and Yellow	Calibration mode failure
Slow Flashing Green and Yellow	Calibration mode success
Slow Flashing Red and Green	Calibration mode reset to factory default settings success
Other Conditions	
Slow Flashing Green	Waiting in CAN Assignment mode

Operating Modes

The MDL-BDC24 can be controlled using either the Servo-style PWM Input or the CAN interface. Table 2-3 compares the capabilities of each control method.

Table 2-4. Control Method Comparison

	Control Method	
	Servo-Style PWM input	**CAN/RS232C Interface**
Open-Loop Speed Control	Yes	Yes
Closed-Loop Speed Control	No	Yes
Analog Position Control	No	Yes
Encoder Position Control	No	Yes
Configurable Parameters	No	Yes
Voltage, Current Measurement	No	Yes
Automatic Output Ramp	Yes	Yes
Limit Switches	Yes[a]	Yes[a]
Coast/Brake Feature	Yes	Yes[b]
Firmware Update	No	Yes

a. Limit switch inputs are disabled when in Automatic Ramp mode.
b. By default, the jumper sets coast/brake. Network commands can over-ride the jumper setting.

Jaguar supports the simultaneous use of CAN for monitoring and the Servo-style input for speed.

Fault Conditions

A slow flashing Red LED indicates that the MDL-BDC24 detected one of the following fault conditions:

- Power supply under-voltage

- Over temperature
- Limit switch activated in the current direction of motion

A slow flashing Red and Yellow LED indicates the following fault condition:

- Over current

When a fault condition occurs, the motor shuts down and the LED indicates a fault state during the fault condition and for 3 seconds after the fault cause is cleared (except for the limit switch fault, which is cleared instantly). A slow flashing Yellow LED indicates that the MDL-BDC24 is not receiving a valid control signal. A fast flashing Orange LED indicates an invalid CAN ID.

Coast/Brake Jumper

The coast/brake signal controls the dynamics of the drive signal to the motor. When set to brake, the MDL-BDC24 is able to achieve greater deceleration and holding torque because it decays regenerative current from the motor.

The coast/brake signal can be set with a jumper or controlled by a signal from a digital source. A single wire connected to the center (S) pin, is recommended. Do not connect to the + pin (+3.3 V) of this connector as any mis-wiring could damage the MDL-BDC24.

The coast/brake jumper setting can be overwritten when using the CAN/RS232 interface.

Power and Motor Wiring

The Overview diagram (Figure 1-2 on page 6) shows motor and power connections to the MDL-BDC24. For power wiring, use 10-12 AWG wire terminated with #6 ring or spade terminals. The control is not protected against reverse polarity or short-circuits.

Automatic Ramp Mode

The Automatic Ramp mode, when activated, automatically ramps the output voltage to the motor at a preset ramp rate. This new feature is designed to reduce the current spikes associated with rapid direction changing.

The preset ramp rate is set to 524 steps per millisecond. With 65,536 steps between full forward and full reverse, a 524 step/ms rate equates to a full-forward to full- reverse transition time of 0.125 seconds. See Figure 2-2 for an example.

Figure 2-2. Sample of Voltage Output with and without Ramp

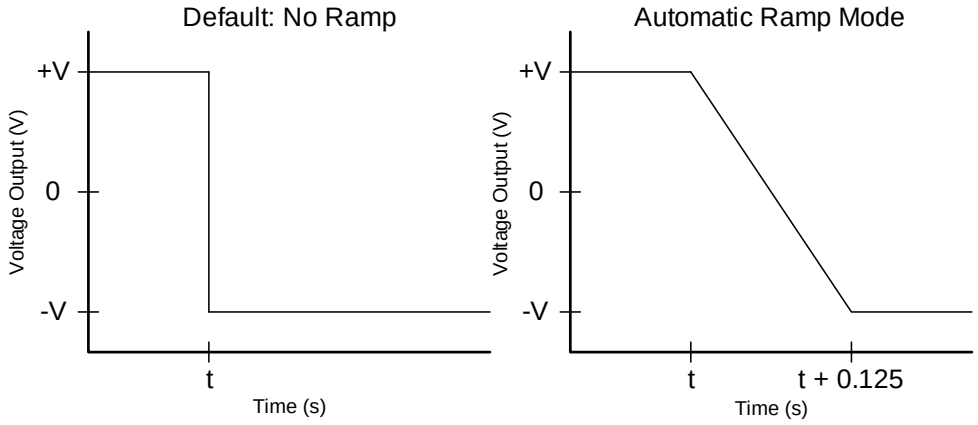

NOTE: At t, the user switches from full forward to full reverse.

The rate is set only once when the Jaguar is powered on. It can be changed, but only by CAN or Serial communication.

The Automatic Ramp mode is accessible regardless of the control mode being used; Servo PWM, CAN, or Serial. With the MDL-BDC24 powered off, turn the two jumpers on the limit switch inputs from their default vertical position, to a horizontal orientation (see Figure 2-3). Then, power on the MDL-BDC24.

Figure 2-3. Automatic Ramp Mode Jumper Positions

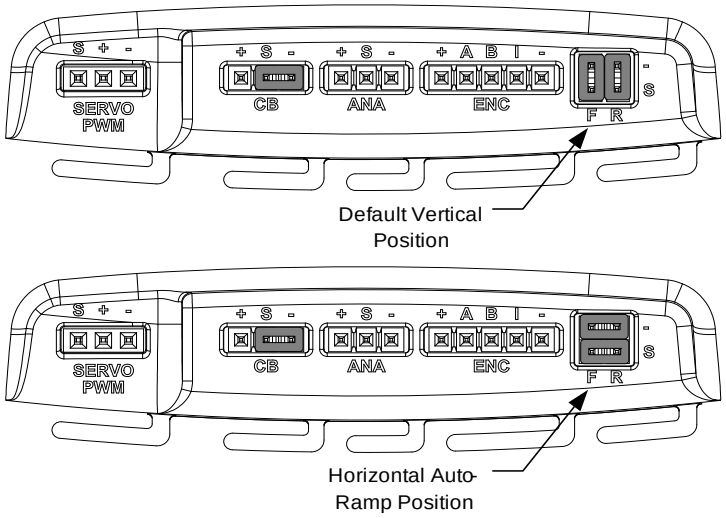

The limit switch inputs are checked once on power-up for the horizontal jumpers. When detected, the MDL-BDC24 enables the automatic ramp and then ignores the limit switch inputs.

NOTE: When Automatic Ramp mode is enabled, the limit switch inputs cannot be used.

Disabling the Automatic Ramp mode requires the jumpers to be in their default vertical position and the MDL-BDC24 to be power cycled.

CHAPTER 3

Servo/PWM-based Control

The MDL-BDC and MDL-BDC24 both support open-loop speed and direction control through a servo-style PWM input. Figure 3-1 shows the servo-wiring details.

Figure 3-1. Wiring for Servo-style PWM Control

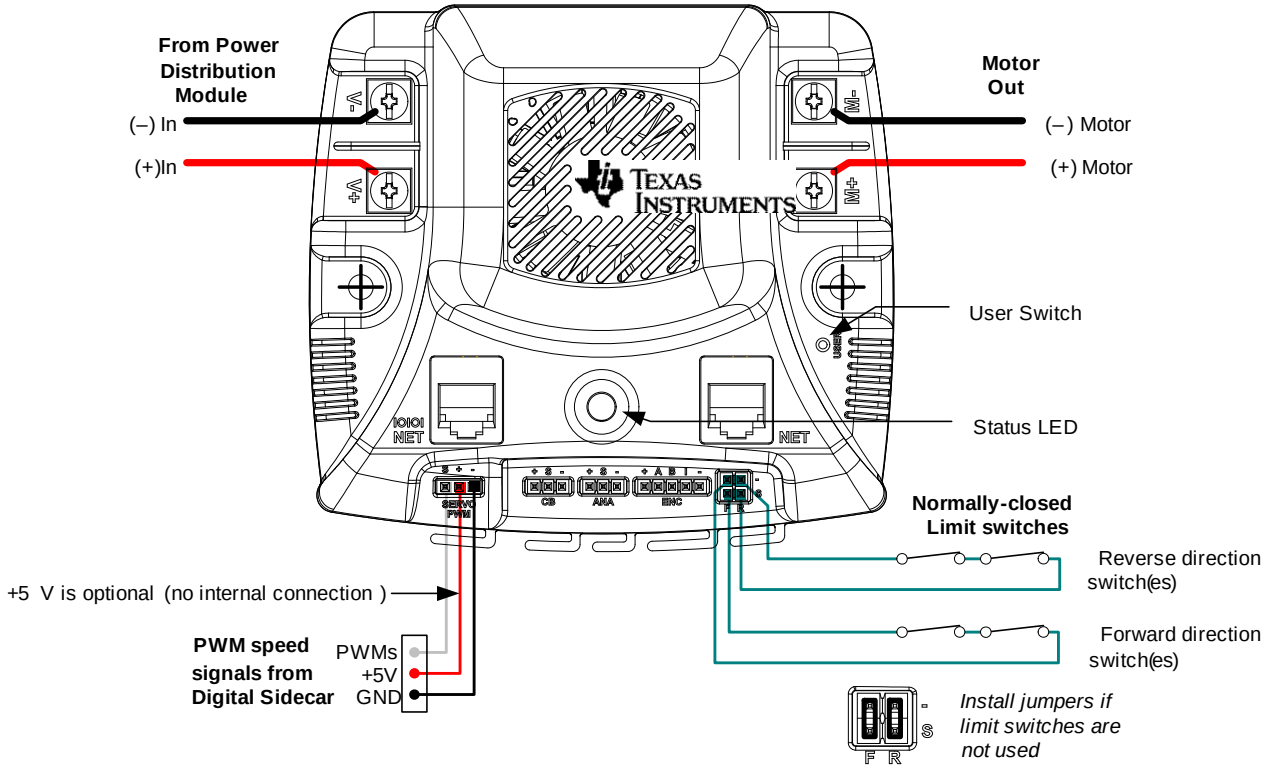

Servo-Style PWM Speed Control Input

The servo PWM input controls the open-loop motor speed and direction. The digital signal must meet the timing and voltage requirements listed in the MDL-BDC24 specifications. The center pin (+) has no internal connection. Because the signal is optically isolated, both the signal (S) and GND (-) pins must be connected to the signal source.

The servo-style PWM input is optically isolated. All other control inputs are non-isolated and are referenced to the power supply (-).

Calibrating the PWM Input

To accommodate variation in the timing of the supplied signal, Jaguar has a calibrate feature that sets new values for full-forward, full-reverse and points in between. Calibration is normally only required in applications where the PWM source has uncertainties due to analog radio links or other variables. Direct digital sources are unlikely to require calibration.

To calibrate the servo-style PWM input for a specific range, connect a PWM source, then:

1. Hold down the USER switch with a straightened paperclip for 5 seconds.
2. The LED flashes Red and Green to indicate Calibration mode.
3. Instruct the controller to send a full-forward signal for one or more seconds.
4. Instruct the controller to send a full-reverse signal for one or more seconds.
5. The LED flashes Green and Yellow quickly to indicate a successful calibration.

The MDL-BDC24 samples these signals and centers the speed range and neutral position between these limits. A calibration failure signals if an out-of-range signal is detected. This condition is indicated by flashing the LED Red and Yellow.

CHAPTER 4

Introduction to Network-Based Control

Both MDL-BDC and MDL-BDC24 support CAN-based control, configuration and firmware updates. MDL-BDC24 also supports the same command set over RS232.

Network Security and System Safety

The factory default network protocol allows for very flexible control networks with all commands being accepted and executed without restriction. However, a vulnerability is that faulty software has the potential to send errant messages. To address the possibility that motors could run when they are not supposed to, a special set of trusted commands have been added. This capability is supported in an FRC-specific firmware update. All MDL-BDC and MDL-BDC24 modules must have updated firmware if they are to be used with CAN or RS232 communication in an FRC competition.

Trusted Mode (FIRST Robotics Competition feature)

Each MDL-BDC and MDL-BDC24 module expects to see a trusted message from the Host every 100 ms. If a trusted message is not received, the MDL-BDC and MDL-BDC24 module shut down the motor output until trusted communication is restored.

Trusted communication relies on a proprietary protocol that defines a dynamic message token, known only to the host driver and a specific MDL-BDC or MDL-BDC24 module.

Non-FIRST users should use the factory-default firmware (available in source form) which does not implement trusted communication.

C H A P T E R 5

Operation using the RS232 Interface

The MDL-BDC24 supports a full set of network control and configuration functions over a standard RS232C serial interface. The command protocol is essentially the same as the protocol used on the CAN interface allowing the MDL-BDC24 to automatically bridge all commands between the RS232 and CAN interfaces.

RS232 signals are implemented on the left-side NET connector, which has a special IOIOI annotation as shown in Figure 5-1.

Figure 5-1. MDL-BDC24 Bridges for RS232 to CAN

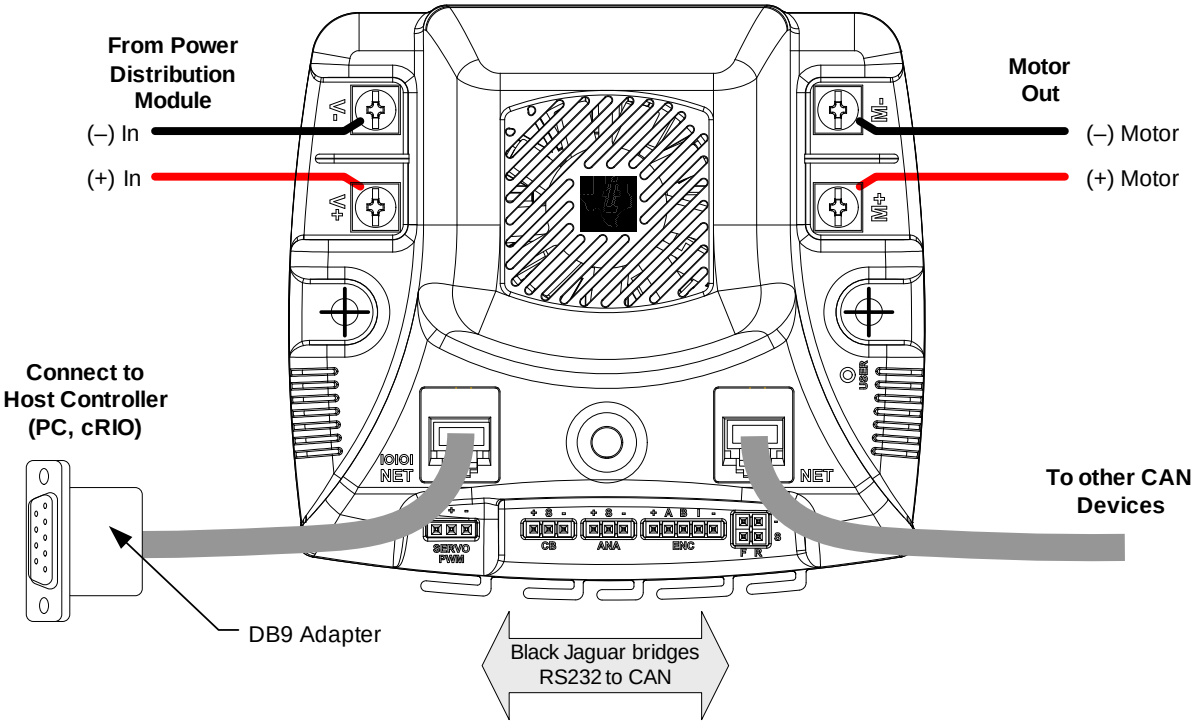

See Appendix A, “Jaguar Communication Cables,” on page 25 for details of the RS232 cable assembly. The recommended DB9 adapter design contains an integrated CAN terminator.

BDC-COMM Application Overview

BDC-COMM is a Windows application for configuring and controlling a Jaguar network using a PC’s RS232 serial port. It is also a convenient tool for performing firmware updates. BDC-COMM requires the use of an MDL-BDC24 to bridge RS232 to CAN. Figure 5-2 on page 17 shows the main GUI window of the BDC-COMM application. For more information on using the BDC-COMM application, see the *BDC-COMM Application User’s Guide*.

Figure 5-2. BDC-COMM GUI Main Window

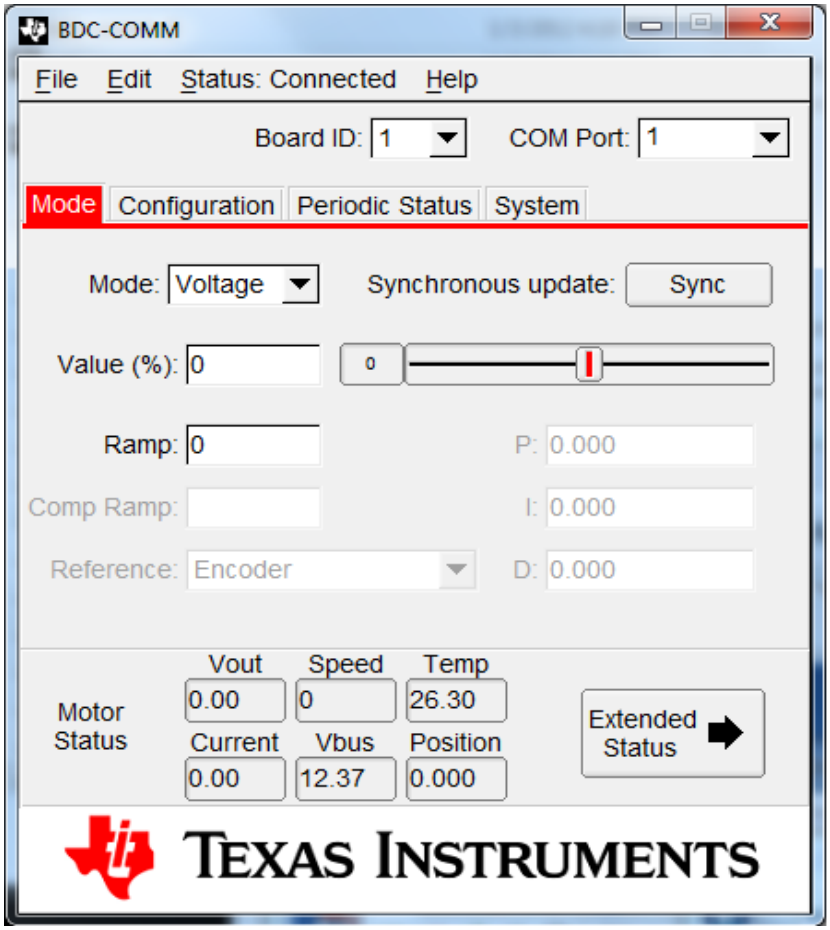

C H A P T E R 6

Firmware Update Using BDC-COMM

Firmware update capability allows Texas Instruments to provide new software, in binary format, that contains feature enhancements and bug fixes.

Special firmware releases have been created for FRC 2010. Both MDL-BDC and MDL-BDC24 have firmware updates available. This firmware update must be installed prior to using RS232 or CAN-based control. Firmware update is optional for Servo/PWM control.

Firmware update requires RS232 and CAN cables, at least one MDL-BDC24, the binary file, a PC with an RS232 port, and a 12 V power source.

The *BDC-COMM Application User's Guide* contains additional detail on using the tool for firmware update as well as other configuration and control functions.

Important Information

Observe the following precautions when updating firmware:

- We strongly recommend connecting only one Jaguar to the network at a time. The exception is when updating a single first generation (MDL-BDC) Jaguar. To update an MDL-BDC Jaguar, add only theMDL-BDC24 that is being used as the RS232-to-CAN bridge.
- Use the correct binary file. For first generation MDL-BDC modules, the file is named QS-BDC.bin. For second generation MDL-BDC24 modules (black), the file is named QS-BDC24.bin

Step 1: Hardware Setup

- Connect an MDL-BDC24 (black) to a PC following the information in Chapter 5, "Operation using the RS232 Interface" on page 16.
- If a first-generation (MDL-BDC) Jaguar (gray) requires firmware update, then connect it to the MDL-BDC24 (see Figure 6-1).
- Apply power. The LED on the Jaguar(s) flash yellow indicating loss-of-link.

Figure 6-1. Valid Configurations for Firmware Update

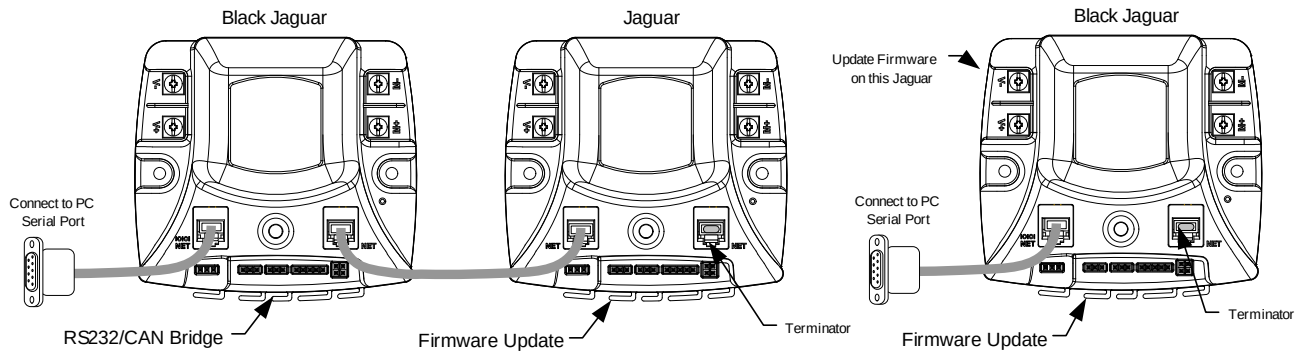

Step 2: Run BDC-COMM

- Run BDC-COMM.EXE.
- The LED on the Jaguar(s) should now be solid yellow indicating a valid network link. If the LED is not solid yellow, check all network connections as well as the BDC-COMM Com Port setting.
- A valid link must be established before proceeding to the next step.

Step 3: Assign Unique CAN ID

- If two modules are connected, each must have a unique CAN ID. The factory default CAN ID is 1.
- Assign the Jaguar modules the ID > 1 so that new Jaguar modules from the factory do not operate on your robot.
- Using the BDC-COMM application, select the System tab and enter a new ID (a unique number from 2..63).
- Click “Assign.” The LED on the module(s) starts flashing green.
- Press the USER button on the module that is to receive the new ID. This must be done within 5 seconds or the operation times out.
- The module’s LED blinks the number of times that corresponds to the ID if assignment was successful (for example, if you assign the unique ID number of 5, the LED blinks five times).
- A fast-flashing yellow LED indicates an invalid CAN ID. This can occur if an attempt is made to reassign an ID that is already in use.

Step 4: Update Firmware

- A valid link must be established before proceeding. Ensure that the LED indicates solid yellow. It might be necessary to reconnect to the CAN network to synchronize the trusted link.
- Select the board ID that you want to update using the “Board ID” menu.
- Select File > Update Firmware from the top menu bar.
- Browse to locate the appropriate binary file:
  - The MDL-BDC24 (black) uses the qs-bdc24.bin file.
  - The MDL-BDC (gray) uses the qs-bdc.bin file.
- Click OK and then click Update.
- A progress bar displays the firmware update progress.
- When the firmware update completes, reconnect bdc-comm to the network to re-establish a link.

The System tab in BDC-COMM displays the firmware version.

CHAPTER 7

Closed-Loop Control Options

A network-controlled Jaguar supports several types of closed-loop control through an internal PID controller.

- Constant-current control
- Position control using an encoder
- Position control using a potentiometer
- Speed control

Only one mode can be used at a time.

For each control mode, refer to API, VI, or tool documentation for information on which commands to use for configuration.

Wiring

All closed-loop mode, except for constant-current control, require an external sensor. Figure 7-1 shows an advanced wiring configuration using the CAN interface. The diagram shows wiring for position sensing using both a position potentiometer and a quadrature encoder. Although two sensor types are shown, the MDL-BDC software supports control and monitoring of only one sensor at a time.

Figure 7-1. Advanced Wiring Diagram

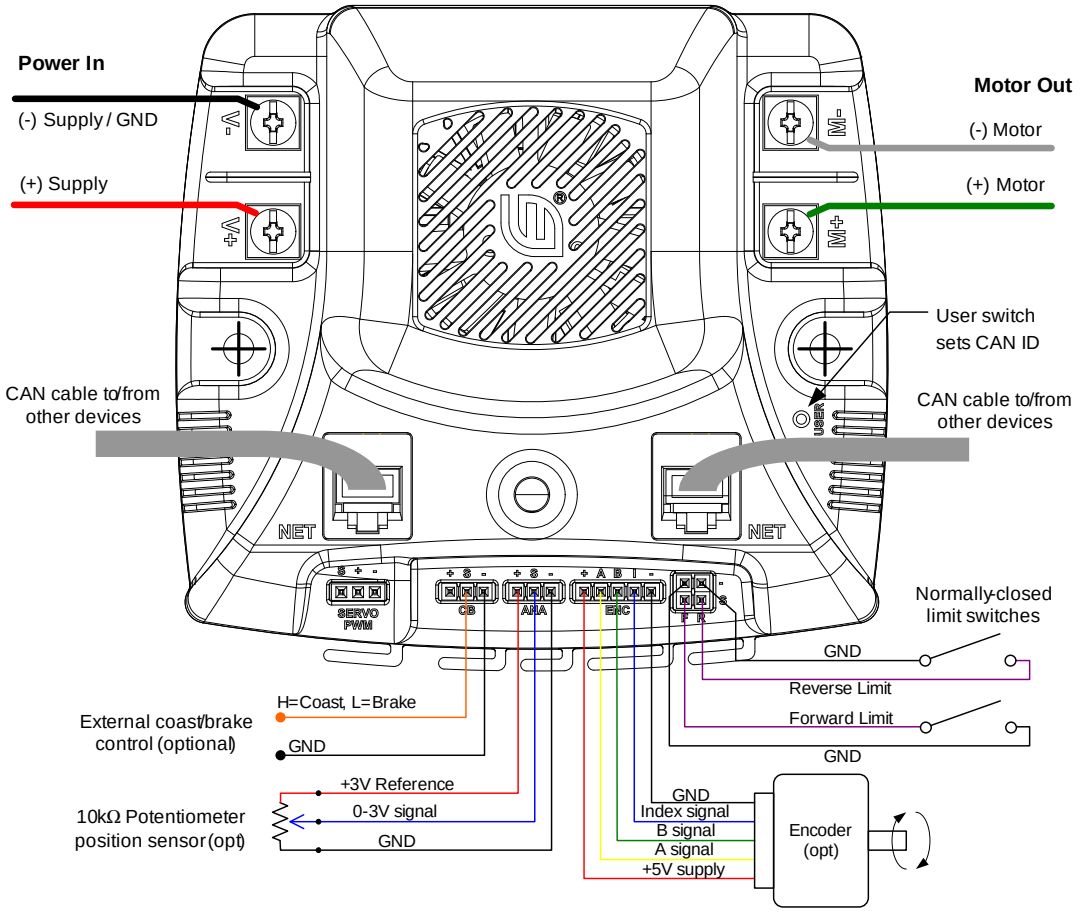

Constant Current Control

The MDL-BDC and MDL-BDC24 modules default to voltage control, but in some applications current (ampere) control is a more useful parameter. In this mode, the MDL-BDC and MDL-BDC24's internal current sensor is used to complete a constant-current control loop. The capabilities of this mode are a function of the motor's parameters and the electrical specification for the module as listed in the data sheet. A small DC motor might not be suitable for use with the Jaguar's constant-current mode.

No additional wiring is needed for constant current control.

Position Control using an Encoder

In position control mode, the MDL-BDC and MDL-BDC24 modules accept position commands over the network, and then use an internal PID controller to autonomously move the motor to the specified position.

The QEI software position count changes on each pulse of the Encoder A input. For example, a 360° movement of a 100 pulse-per-revolution (PPR) encoder results in a 100-count change in the position value. PPR is sometimes referred to as the number of lines that an encoder has.

The relationship between the Encoder B input and the Encoder A input determines whether the position counter increments or decrements.

An edge on the Index (“I”) input resets the position counter to zero.

The MDL-BDC and MDL-BDC24 modules support a wide range of shaft encoders. Encoder electrical parameters are detailed in the corresponding data sheets.

If the P, I and D parameters are positive (or zero), the MDL-BDC and MDL-BDC24 modules expect that a forward condition (+ voltage on White terminal, - voltage on Green) generates increasing counts on the encoder interface. Increasing counts occur when the rising (or falling) edge of the A input leads the rising (or falling) edge of the B input.

If the P, I and D parameters are negative (or zero), the MDL-BDC and MDL-BDC24 modules expect that a forward condition (+ voltage on White terminal, - voltage on Green) generates decreasing counts on the encoder interface. Decreasing counts occur when the rising (or falling) edge of the B input leads the rising (or falling) edge of the A input.

See Figure 7-1 on page 21 for wiring information. For reliable operation, keep encoder wiring short and route it away from noise sources. The encoder inputs are not electrically isolated.

Position Control Using a Potentiometer

Position control can also be implemented with a single or multi-turn potentiometer. Potentiometers with continuous rotation are not supported.

The MDL-BDC and MDL-BDC24 modules contain a built-in bias pin for use with 10 kΩ potentiometers. If another potentiometer value or analog source is used, it must have a 0-3 V range.

If the P, I and D parameters are positive (or zero), Jaguar expects that a forward condition (+ voltage on White terminal, - voltage on Green) generates an increasing voltage on the analog input.

If the P, I and D parameters are positive (or zero), Jaguar expects that a forward condition (+ voltage on White terminal, - voltage on Green) generates a decreasing voltage on the analog input.

The analog input is not electrically isolated.

Speed Control

Speed control can be implemented with either an encoder or with a simple tachometer sensor. If a tachometer sensor is used (such as a gear-tooth sensor), then the signal should be connected to the Encoder ‘A’ input signal, with the ‘B’ and ‘I’ input left unconnected.

The speed set-point is defined in revolutions per second. Adjust the encoder-lines parameter if the sensor generates more than one pulse per revolution.

C H A P T E R 8

Operation Using the CAN Interface

Controller Area Network (CAN) provides a powerful interface for controlling one or more Jaguar modules. Jaguar has a 6P6C socket and a 6P4C socket for daisy-chaining modules using standard cables. Each end of the CAN network should be terminated with a 100Ω resistor.

The CAN protocol used by Jaguar includes the following capabilities:

- Firmware update over CAN
- Read supply voltage, motor voltage, temperature and current
- Set and read motor voltage or target position
- Set control mode to speed or position
- Configure parameters
- Enable features such as closed-loop speed and position control.
- Trusted communication with keep-alive commands for fail-safe operation

CAN IDs

Each MDL-BDC24 module on the CAN bus is accessed using an assigned ID number. The ID defaults to 1, but should be changed to a unique value from 2 to 63 by following the ID Assignment procedure. The procedure is detailed in Step 3 of the firmware update procedure in Chapter 6, “Firmware Update Using BDC-COMM”, page 18.

At the network protocol level, ID assignment involves the following:

1. The Host sends Assign ID + *number* command to all Jaguar modules.
2. Pressing the USER switch on an MDL-BDC24 informs that particular module to accept the previously specified *ID number* and save it to non-volatile memory. The operation times out if a switch is not pressed within 5 seconds.
3. The Jaguar with the new ID assignment sends out a message to let all Jaguar modules know that the ID assignment is complete. Normal operation resumes.

CAN Network

A CAN network consists of one or more Jaguar modules, an interface or bridge, and a host controller. Figure 8-1 shows a typical configuration.

Figure 8-1. CAN Network Topology

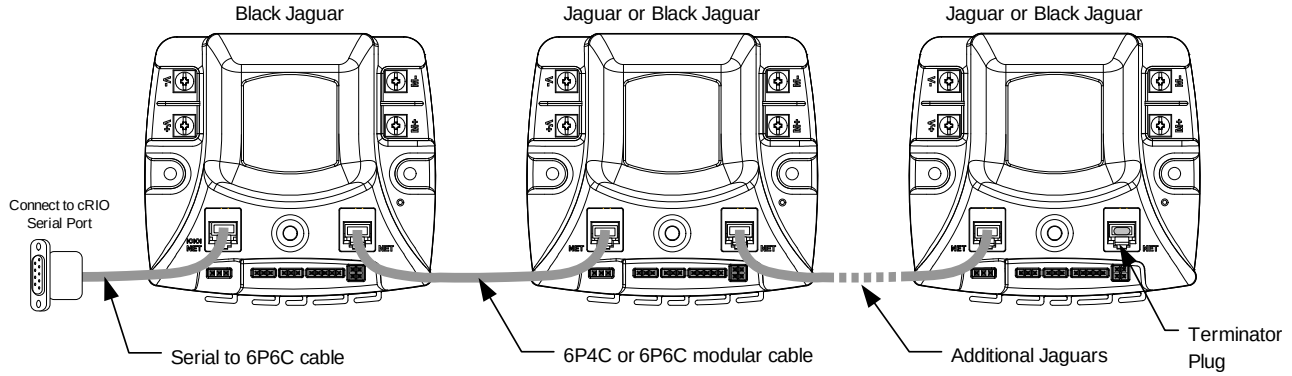

CAN cabling follows a daisy-chained topology using modular cable. Table 8-1 lists network parameters.

Table 8-1. CAN Wiring Parameters

Parameter	Value	Notes
Maximum Nodes	16	A node is defined as a device on the CAN network. This includes all Jaguar modules and any device that sends and receives CAN messages. If you use the Black Jaguar as a bridge, all Jaguar modules (gray or black, including the Bridge) count as nodes, but the computer (or CRIO) does not since it is sending messages over the serial port.
Total Cable Length (maximum)	20 ft / 6.1m	Tip: Start with this length of bulk cable and cut all segments from it to ensure compliance.
Termination Resistance	100	At each end of the network.
Cable Type	4 or 6 conductor modular cable. 28 or 26 AWG.	

See Appendix A, “Jaguar Communication Cables,” on page 25 for cable and terminator assembly instructions.

Control Options for Networked Jaguar Modules

The Host controller on a Jaguar network requires a software driver to implement the CAN communication protocol. Protocol details are available from the RDK-BDC24 pages at www.ti.com/jaguar. To simplify programming, National Instruments and Texas Instruments have created a range of tools to simplify Jaguar control.

The following Host tools/APIs/Virtual Instruments are available:

- BDC-COMM is a Windows application for configuring, testing, and performing firmware upgrades.
- LabView VI
- Java API
- C++ API
- Example source code for a host-based on a Stellaris Microcontroller can be found in StellarisWare® (\boards\rdk-bdc\bdc-ui) also available at www.ti.com/jaguar.

A P P E N D I X A

Jaguar Communication Cables

CAN Terminator

Because the CAN signals operate at high bit rates (1 MBPS), a terminator is required at each end of the network. A simple network might work with a single terminator, but this is not recommended for normal use. The termination resistor is also important for returning the CAN signaling levels to the recessive state when no nodes are transmitting. Figure A-1 shows the recommended terminator construction.

Figure A-1. CAN Terminator Plug

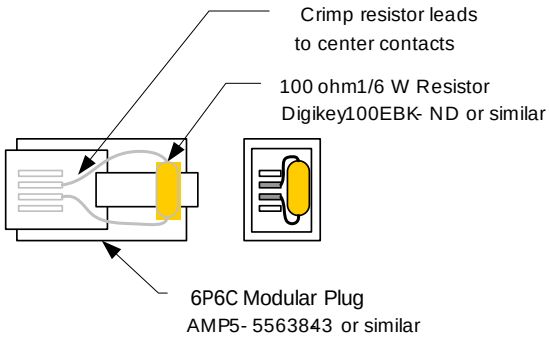

CAN Cable

Use CAN cables to daisy-chain the network between Jaguar modules. Standard off-the-shelf modular 6P6C cables can be used. Cables must be “straight-pinned,” which means Pin 1 > 1, Pin 2 > 2, and so on. This is also referred to as a reverse-cable because the tabs on the connectors are on the opposite sides of the cable. The CAN cable needs only 4 conductors, but it is acceptable to use a 6-conductor cable and plugs. A suitable 6-ft off-the-shelf 6P4C cable is Digikey Stock No. A2662R-07-ND.

Figure A-2 shows the materials needed to build custom-length CAN cables. Apart from a modular plug crimp tool, no special tools are required.

Figure A-2. Materials Needed to Assemble Custom-Length 6P4C Cable

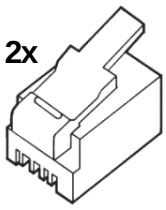

Modular plug for stranded flat - oval cable
AMP P/No. 5-641335
Digikey Stock No. A9092-ND

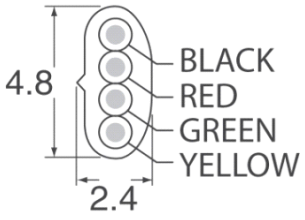

Modular cable – 4 conductor
Assmann Elect. AT-K-26-4-S/100-R
Digikey Stock No. A0043R-100-ND

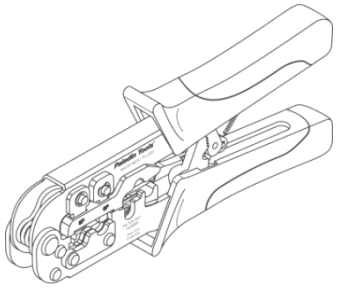

6P6C/6P4C Modular Plug Crimp Tool

CAN Cable Assembly

Follow these steps to complete cable assembly (shown in Figure A-3):

1. Cut modular cable to length
2. Use the crimp to strip the outer jacket from each end of the cable.
3. Insert wires into the modular plug and load into crimper.
4. Close crimper to complete the connections and secure the cable.

Figure A-3. Completed Cable Assembly

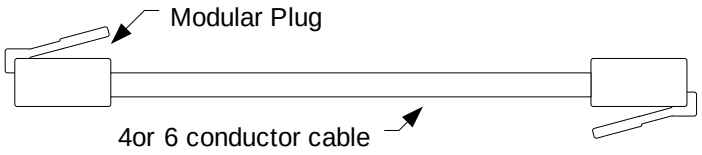

CAN Cable Pin Assignments

Plug	Wire Color	Jaguar Use
1	Black	-
2	Red	CAN H
3	Green	CAN L
4	Yellow	GND

RS232 Cable

Figure A-4 shows the materials needed to build the RS232 cable. Apart from a soldering-iron, no special tools are required.

Figure A-4. Materials Needed to Assemble RS232 Cable Components



RS232 Cable Assembly

Follow these steps to complete cable assembly (shown in Figure A-4):

1. Take the Modular Adapter and cut the black wire as short as possible. This wire is unused.
2. Cut off the terminals on the Red and Green wires. Strip then solder the Red and Green wires to the 100 resistor. Use a section of heat shrink to protect the resistor and solder connections.

3. Insert remaining terminals into the DB9 receptacle. Pin numbers are indicated on the plastic connector body.
   - White/Pin 3
   - Blue/Pin 2
   - Yellow/Pin 5
4. Slide the back-shell over the connector, then insert the modular cable to complete the assembly.

RS232 Cable Pin Assignments

6P6C	Wire Color	Jaguar Use	PC Use	DB9 Pin
1	White	RXD	TXD	3
2	Black	-	-	-
3	Red	CAN H	-	-
4	Green	CAN L	-	-
5	Yellow	GND	GND	5
6	Blue	TXD	RXD	2

External References

The following references are also useful for working with MDL-BDC24 module:

- The *MDL-BDC24 Data Sheet* contains detailed electrical specifications and connector details.
- The *BDC-COMM User's Guide* provides instructions on how to use the BDC-COMM GUI and command line applications to control Jaguar networks.
- MDL-BDC24 FAQ

IMPORTANT NOTICE

Texas Instruments Incorporated and its subsidiaries (TI) reserve the right to make corrections, modifications, enhancements, improvements, and other changes to its products and services at any time and to discontinue any product or service without notice. Customers should obtain the latest relevant information before placing orders and should verify that such information is current and complete. All products are sold subject to TI's terms and conditions of sale supplied at the time of order acknowledgment.

TI warrants performance of its hardware products to the specifications applicable at the time of sale in accordance with TI's standard warranty. Testing and other quality control techniques are used to the extent TI deems necessary to support this warranty. Except where mandated by government requirements, testing of all parameters of each product is not necessarily performed.

TI assumes no liability for applications assistance or customer product design. Customers are responsible for their products and applications using TI components. To minimize the risks associated with customer products and applications, customers should provide adequate design and operating safeguards.

TI does not warrant or represent that any license, either express or implied, is granted under any TI patent right, copyright, mask work right, or other TI intellectual property right relating to any combination, machine, or process in which TI products or services are used. Information published by TI regarding third-party products or services does not constitute a license from TI to use such products or services or a warranty or endorsement thereof. Use of such information may require a license from a third party under the patents or other intellectual property of the third party, or a license from TI under the patents or other intellectual property of TI.

Reproduction of TI information in TI data books or data sheets is permissible only if reproduction is without alteration and is accompanied by all associated warranties, conditions, limitations, and notices. Reproduction of this information with alteration is an unfair and deceptive business practice. TI is not responsible or liable for such altered documentation. Information of third parties may be subject to additional restrictions.

Resale of TI products or services with statements different from or beyond the parameters stated by TI for that product or service voids all express and any implied warranties for the associated TI product or service and is an unfair and deceptive business practice. TI is not responsible or liable for any such statements.

TI products are not authorized for use in safety-critical applications (such as life support) where a failure of the TI product would reasonably be expected to cause severe personal injury or death, unless officers of the parties have executed an agreement specifically governing such use. Buyers represent that they have all necessary expertise in the safety and regulatory ramifications of their applications, and acknowledge and agree that they are solely responsible for all legal, regulatory and safety-related requirements concerning their products and any use of TI products in such safety-critical applications, notwithstanding any applications-related information or support that may be provided by TI. Further, Buyers must fully indemnify TI and its representatives against any damages arising out of the use of TI products in such safety-critical applications.

TI products are neither designed nor intended for use in military/aerospace applications or environments unless the TI products are specifically designated by TI as military-grade or "enhanced plastic." Only products designated by TI as military-grade meet military specifications. Buyers acknowledge and agree that any such use of TI products which TI has not designated as military-grade is solely at the Buyer's risk, and that they are solely responsible for compliance with all legal and regulatory requirements in connection with such use.

TI products are neither designed nor intended for use in automotive applications or environments unless the specific TI products are designated by TI as compliant with ISO/TS 16949 requirements. Buyers acknowledge and agree that, if they use any non-designated products in automotive applications, TI will not be responsible for any failure to meet such requirements.

Following are URLs where you can obtain information on other Texas Instruments products and application solutions:

Products		**Applications**	
Audio	www.ti.com/audio	Automotive and Transportation	www.ti.com/automotive
Amplifiers	amplifier.ti.com	Communications and Telecom	www.ti.com/communications
Data Converters	dataconverter.ti.com	Computers and Peripherals	www.ti.com/computers
DLP® Products	www.dlp.com	Consumer Electronics	www.ti.com/consumer-apps
DSP	dsp.ti.com	Energy and Lighting	www.ti.com/energy
Clocks and Timers	www.ti.com/clocks	Industrial	www.ti.com/industrial
Interface	interface.ti.com	Medical	www.ti.com/medical
Logic	logic.ti.com	Security	www.ti.com/security
Power Mgmt	power.ti.com	Space, Avionics and Defense	www.ti.com/space-avionics-defense
Microcontrollers	microcontroller.ti.com	Video and Imaging	www.ti.com/video
RFID	www.ti-rfid.com		
OMAP Mobile Processors	www.ti.com/omap		
Wireless Connectivity	www.ti.com/wirelessconnectivity		
	TI E2E Community Home Page		e2e.ti.com

Mailing Address: Texas Instruments, Post Office Box 655303, Dallas, Texas 75265
Copyright © 2012, Texas Instruments Incorporated