MD1820

High-Speed 4-Channel MOSFET Driver with Non-Inverting Outputs

Features

- Non-inverting, 4-channel MOSFET Driver
- 6 ns Rise and Fall Time
- 2A Peak Output Source and Sink Currents
- 1.8V to 5V Input CMOS Compatible
- 5V to 10V Total Supply Voltage
- Smart Logic Threshold
- Low-jitter Design
- Four Matched Channels
- Drives Two P-channel and Two N-channel MOSFETs
- Outputs can Swing below Ground
- Low-inductance Quad Flat No-lead Package
- High-performance, Thermally Enhanced Package

Applications

- Medical Ultrasound Imaging
- Piezoelectric Transducer Drivers
- Non-destructive Testing (NDT)
- PIN Diode Driver
- CCD Clock Driver/buffer
- High-speed Level Translator

General Description

The MD1820 is a high-speed, 4-channel MOSFET driver designed to drive high-voltage P-channel and N-channel MOSFETs for medical ultrasound applications and other applications requiring a high output current for a capacitive load. The high-speed input stage of the MD1820 can operate from a 1.8V to 5V logic interface with an optimum operating input signal range of 1.8V to 3.3V. An adaptive threshold circuit is used to set the level translator switch threshold to the average of the input logic 0 and logic 1 levels. The input logic levels may be ground referenced, even though the driver is putting out bipolar signals. The level translator uses a proprietary circuit, which provides DC coupling together with high-speed operation.

The output stage of the MD1820 has separate power connections, enabling the output signal L and H levels to be chosen independently from the supply voltages used for the majority of the circuit. As an example, the input logic levels may be 0V and 1.8V, the control logic may be powered by +5V and –5V and the output L and H levels may be varied anywhere over the range of –5V to +5V. The output stage is capable of peak currents of up to ±2A, depending on the supply voltages used and load capacitance present. The PE pin serves a dual purpose. First, its logic H level is used to compute the threshold voltage level for the channel input level translators. Second, when PE is low, the outputs are High Z. This assists in properly precharging the AC coupling capacitors that may be used in series in the gate drive circuit of an external PMOS and NMOS transistor pair.

Package Type

16-lead QFN
(Top view)

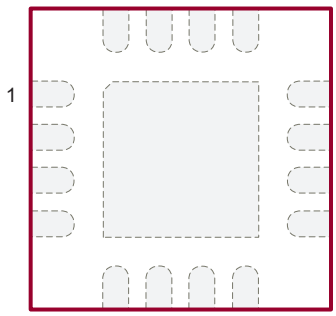

See Table 2-1 for pin information.

© 2017 Microchip Technology Inc.

Functional Block Diagrams

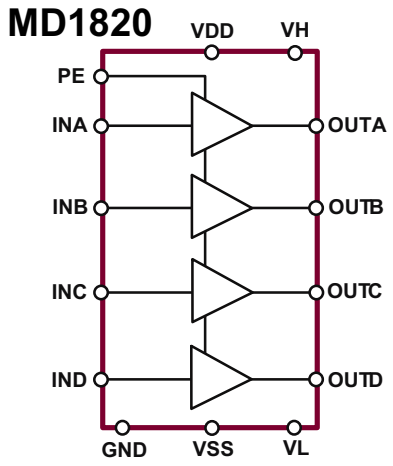

Simplified Block Diagram

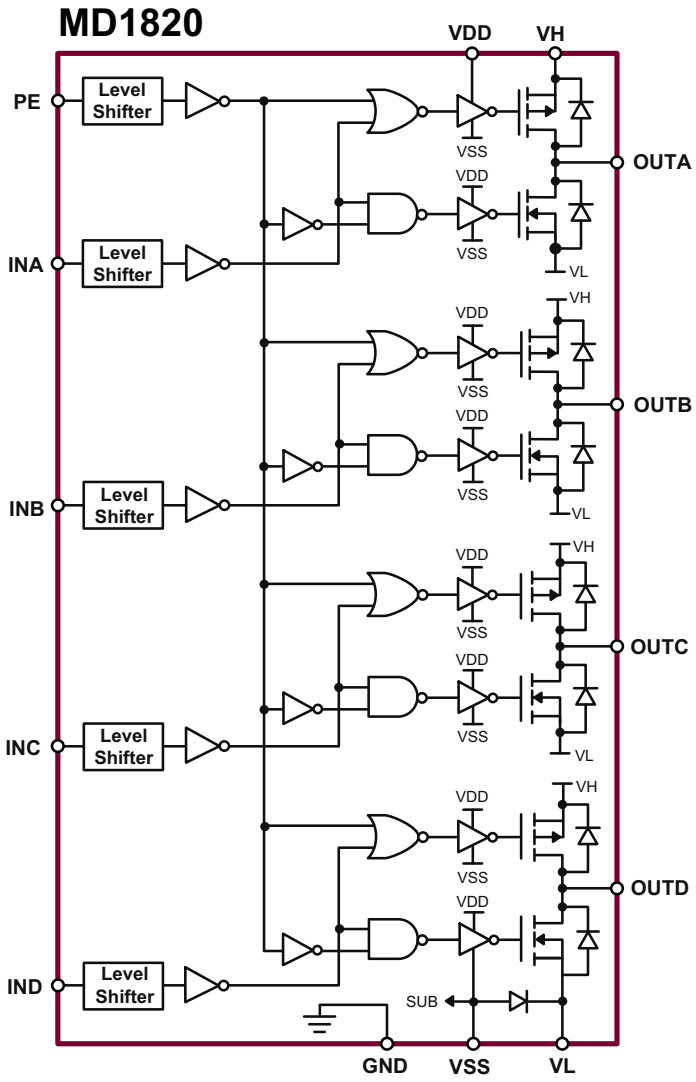

Detailed Block Diagram

© 2017 Microchip Technology Inc.

Typical Application Circuits

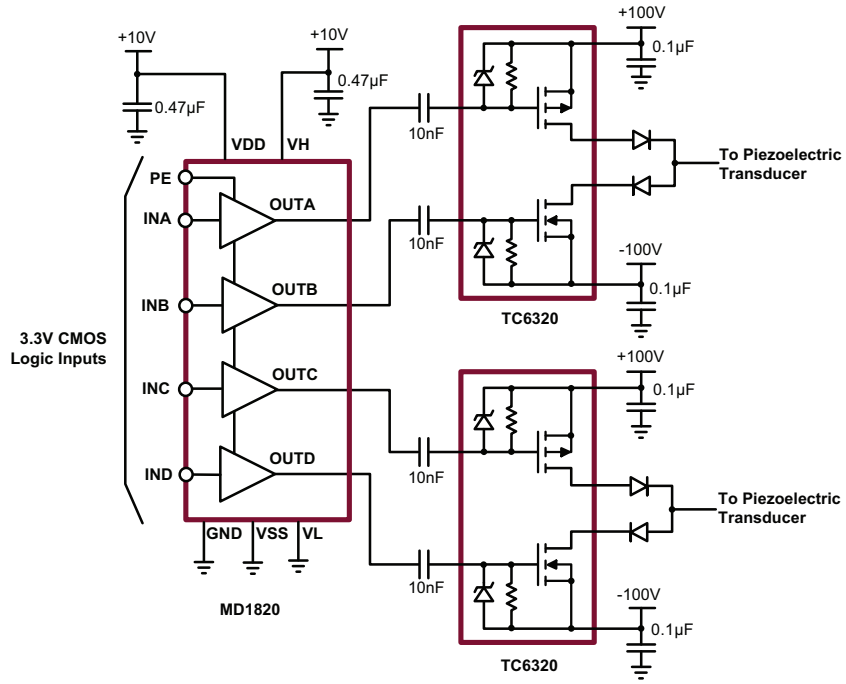

Typical 2-Channel +/–100V Application Diagram

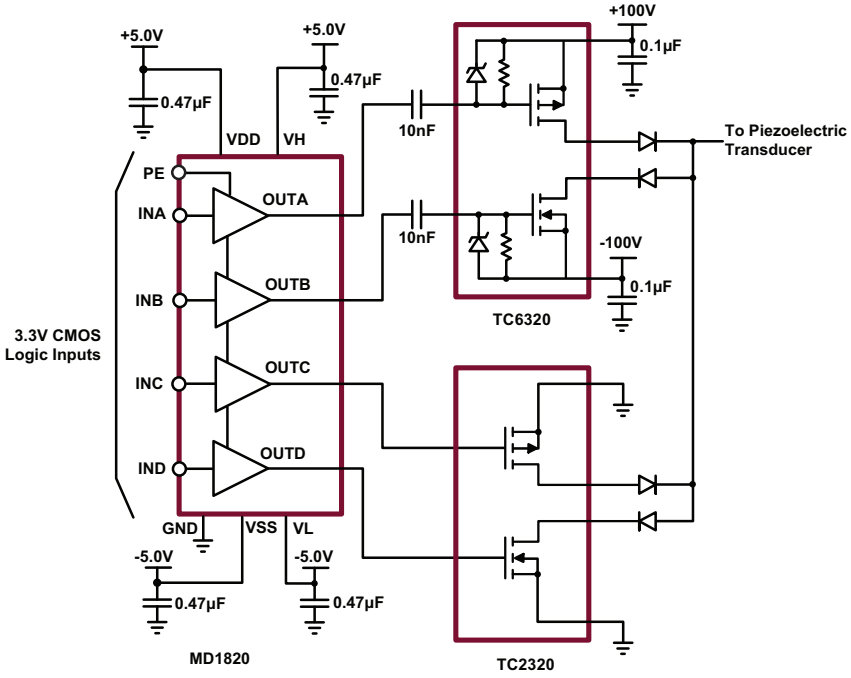

Typical 1-Channel +/–100V RTZ Application Diagram

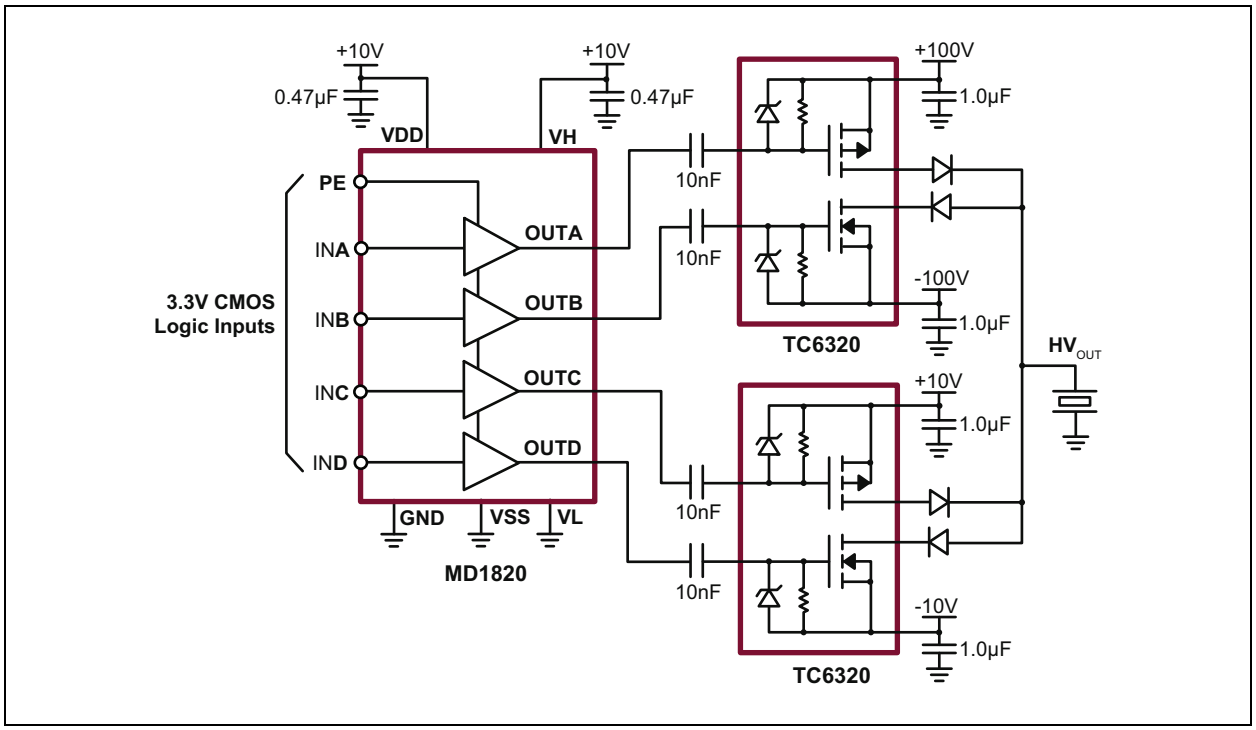

© 2017 Microchip Technology Inc.

1.0 ELECTRICAL CHARACTERISTICS

Absolute Maximum Ratings†

Logic Supply Voltage, V_{DD}–V_{SS} ..... –0.5V to +12.5V
Output High Supply Voltage, V_H ..... V_L–0.5V to V_{DD} +0.5V
Output Low Supply Voltage, V_L ..... V_{SS}–0.5V to V_H +0.5V
Low-side Supply Voltage, V_{SS} ..... –6V to +0.5V
Logic Input Levels ..... V_{SS}–0.5V to GND +5.5V
Maximum Junction Temperature, T_J ..... +125°C
Operating Ambient Temperature, T_A ..... –20°C to +85°C
Storage Temperature, T_S ..... –65°C to +150°C
Package Power Dissipation:
16-lead QFN 2.2W
ESD Rating (**Note 1**) ..... ESD Sensitive

† Notice: Stresses above those listed under “Absolute Maximum Ratings” may cause permanent damage to the device. This is a stress rating only, and functional operation of the device at those or any other conditions above those indicated in the operational sections of this specification is not intended. Exposure to maximum rating conditions for extended periods may affect device reliability.

Note 1: Device is ESD sensitive. Handling precautions are recommended.

DC ELECTRICAL CHARACTERISTICS

Electrical Specifications: $V_H = V_{DD} = 10V$, $V_L = V_{SS} = GND = 0V$, $V_{PE} = 3.3V$, $T_A = 25°C$

Parameter	Sym.	Min.	Typ.	Max.	Unit	Conditions
Logic Supply Voltage	V_{DD}–V_{SS}	4.75	—	11.5	V	$4V \le V_{DD} \le 11.5V$
Low-side Supply Voltage	V_{SS}	–5.5	—	0	V	
Output High Supply Voltage	V_H	V_{SS}+2	—	V_{DD}	V	
Output Low Supply Voltage	V_L	V_{SS}	—	V_{DD}–4	V	
V_{DD} Quiescent Current	I_{DDQ}	—	60		µA	No input transitions, PE = 0
V_H Quiescent Current	I_{HQ}	—	2	—	µA	
V_{DD} Quiescent Current	I_{DDQ}	—	0.8	—	mA	No input transitions, PE = 1
V_H Quiescent Current	I_{HQ}	—	2	—	µA	
V_{DD} Average Current	I_{DD}	—	3.5	—	mA	One channel on at 5 MHz, no load
V_H Average Current	I_H	—	10	—	mA	
Input Logic Voltage High	V_{IH}	V_{PE}–0.3	—	V_{PE}	V	For logic inputs INA, INB, INC and IND
Input Logic Voltage Low	V_{IL}	0	—	0.3	V	
Input Logic Current High	I_{IH}	—	—	1	µA	
Input Logic Current Low	I_{IL}	—	—	1	µA	
PE Input logic Voltage High	V_{IH}	1.7	3.3	5.25	V	For logic input PE
PE Input Logic Voltage Low	V_{IL}	0	—	0.3	V	
PE Input Resistance	R_{IN_PE}	100	—	—	kΩ	
Logic Input Capacitance	C_{IN}	—	5	10	pF	
Output Sink Resistance	R_{SINK}	—	1.5	—	Ω	I_{SINK} = 50 mA
Output Source Resistance	R_{SOURCE}	—	2	—	Ω	I_{SOURCE} = 50 mA
Peak Output Sink Current	I_{SINK}	—	2	—	A	
Peak Output Source Current	I_{SOURCE}	—	2	—	A	

© 2017 Microchip Technology Inc.

AC ELECTRICAL CHARACTERISTICS

Electrical Specifications: $V_H = V_{DD} = 10V$, $V_L = V_{SS} = GND = 0V$, $V_{PE} = 3.3V$, $T_A = 25°C$						
Parameter	**Sym.**	**Min.**	**Typ.**	**Max.**	**Unit**	**Conditions**
Input or PE Rise and Fall Time	t_{irf}	—	—	10	ns	Logic input edge speed requirement
Propagation Delay when Output is from Low to High	t_{PLH}	—	6.5	—	ns	C_{LOAD} = 1000 pF (See **Timing Diagram**.), input signal rise/fall time 2 ns
Propagation Delay when Output is from High to Low	t_{PHL}	—	6.5	—	ns	
Output Rise Time	t_r	—	7	—	ns	
Output Fall Time	t_f	—	7	—	ns	
Rise and Fall Time Matching	$\lvert t_r - t_f \rvert$	—	1	—	ns	For each channel
Propagation Low to High and High to Low Matching	$\lvert t_{PLH} - t_{PHL} \rvert$	—	1	—	ns	
Propagation Delay Matching	Δt_{dm}	—	±2	—	ns	Device-to-device delay match
PE On Time	t_{PE-ON}	—	—	5	µs	V_{PE} = 1.7V~5.25V, V_{DD} = 7.5V~11.5V, –20°C~85°C
PE Off-time	t_{PE-OFF}	—	—	4	µs	

TEMPERATURE SPECIFICATIONS

Parameter	**Sym.**	**Min.**	**Typ.**	**Max.**	**Unit**	**Conditions**
TEMPERATURE RANGE						
Maximum Junction Temperature	T_J	—	—	+125	°C	
Operating Ambient Temperature	T_A	–20	—	+85	°C	
Storage Temperature	T_S	–65	—	+150	°C	
PACKAGE THERMAL RESISTANCE						
16-lead QFN	θ_{JA}	—	55	—	°C/W	**Note 1**

Note 1: 1 oz four-layer 3” x 4” PCB

© 2017 Microchip Technology Inc.

Timing Diagram

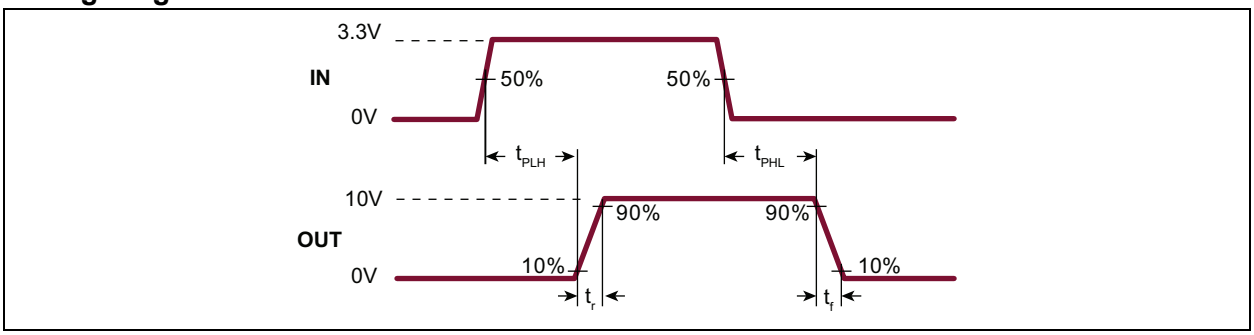

TABLE 1-1: TRUTH FUNCTION TABLE

Logic Inputs		Output
PE	**IN**	
H	L	V_L
H	H	V_H
L	X	High Z

2.0 PIN DESCRIPTION

The details on the pins of MD1820 are listed on Table 2-1. See **Package Type** for the location of pins.

TABLE 2-1: PIN FUNCTION TABLE

Pin Number	Pin Name	Description
1	INB	Logic input
2	VDD	High-side supply voltage
3	VSS	Low-side supply voltage. VSS is also connected to the IC substrate. It is required to connect to the most negative potential of voltage supplies.
4	INC	Logic input
5	IND	
6	GND	Logic input ground reference
7	VL	Supply voltage for N-channel output stage
8	OUTC	Output drivers
9	OUTD	
10, 11	VH	Supply voltage for P-channel output stage
12	OUTA	Output drivers
13	OUTB	
14	VL	Supply voltage for N-channel output stage
15	PE	Power enable logic input. When PE is high, the input logic threshold is set. When PE is low, all outputs are at default state and the IC is in Standby mode. (See Table 1-1 and Figure 3-1.)
16	INA	Logic input
Substrate		The IC substrate is internally connected to the thermal pad. The thermal pad and VSS must be connected externally.

© 2017 Microchip Technology Inc.

3.0 APPLICATION INFORMATION

For proper operation of the MD1820, low-inductance bypass capacitors should be used on the various supply pins. The GND pin should be connected to the logic ground. The INA, INB, INC, IND and PE pins should be connected to a logic source with a swing of GND to PE, where PE is 1.8V to 5V. Good trace practices should be followed corresponding to the desired operating speed. The internal circuitry of the MD1820 is capable of operating up to 100 MHz, with the primary speed limitation being the loading effects of the load capacitance. Because of this speed and the high transient currents due to capacitive loads, the bypass capacitors should be as close to the chip pins as possible. Unless the load specifically requires bipolar drive, the V_{SS} and V_L pins should have a low-inductance bypass capacitor to GND and supply power connections. If these voltages are not zero, they need bypass capacitors similar to the positive power supplies. The power connection V_{DD} should have a ceramic bypass capacitor to the ground plane with short leads and decoupling components to prevent resonance in the powerleads.

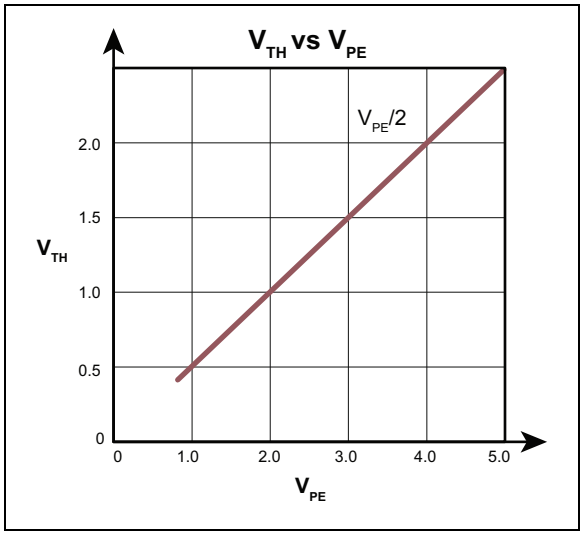

FIGURE 3-1: *V_{TH}/V_{PE} Curve.*

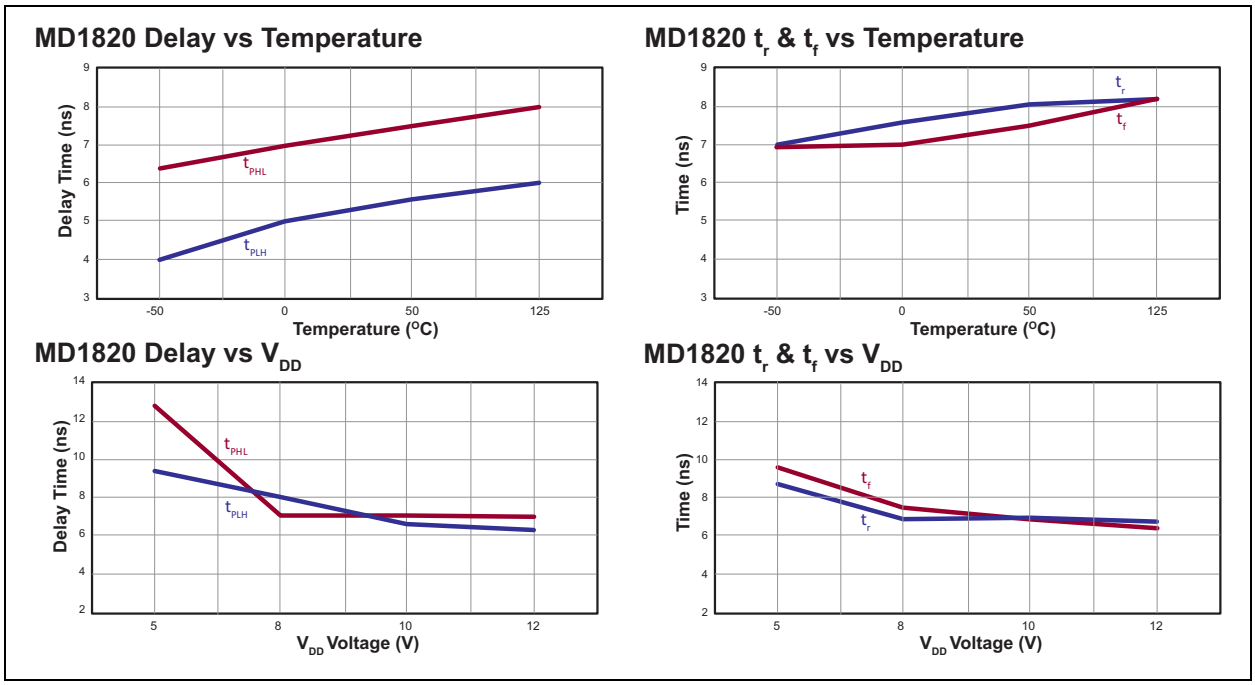

FIGURE 3-2: *Timing Characteristics vs. Temperature and V_{DD}.*

The voltages of V_H and V_L decide the output signal levels. These two pins can draw fast transient currents of up to 2A, so they should be provided with an appropriate bypass capacitor located next to the chip pins. A ceramic capacitor of up to 1 µF may be appropriate, with a series ferrite bead to prevent resonance in the power supply lead going to the capacitor. Pay particular attention to minimizing trace lengths, current loop area and using sufficient trace width to reduce inductance. Surface-mount components are highly recommended. Since the output impedance of this driver is very low, in some cases, it may be desirable to add a small series resistor in series with the output signal to obtain better waveform transitions at the load terminals. This will reduce the output voltage slew rate at the terminals of a capacitive load.

© 2017 Microchip Technology Inc.

Make sure that parasitic couplings are minimized from the output to the input signal terminals. The parasitic feedback may cause oscillations or spurious waveform shapes on the edges of signal transitions. Since the input operates with signals down to 1.8V, even small coupled voltages may cause problems. The use of a solid ground plane and good power and signal layout practices will prevent this problem. Make sure that the circulating ground return current from a capacitive load will not react with common inductance to cause noise voltages in the input logic circuitry.

© 2017 Microchip Technology Inc.

4.0 PACKAGING INFORMATION

4.1 Package Marking Information

16-lead QFN



Example

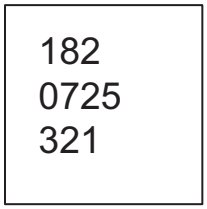

Legend:	XX...X	Product Code or Customer-specific information
	Y	Year code (last digit of calendar year)
	YY	Year code (last 2 digits of calendar year)
	WW	Week code (week of January 1 is week ‘01’)
	NNN	Alphanumeric traceability code
	(e3)	Pb-free JEDEC® designator for Matte Tin (Sn)
	*	This package is Pb-free. The Pb-free JEDEC designator ((e3)) can be found on the outer packaging for this package.

Note: In the event the full Microchip part number cannot be marked on one line, it will be carried over to the next line, thus limiting the number of available characters for product code or customer-specific information. Package may or not include the corporate logo.

16-Lead QFN Package Outline (K6)

3.00x3.00mm body, 1.00mm height (max), 0.50mm pitch

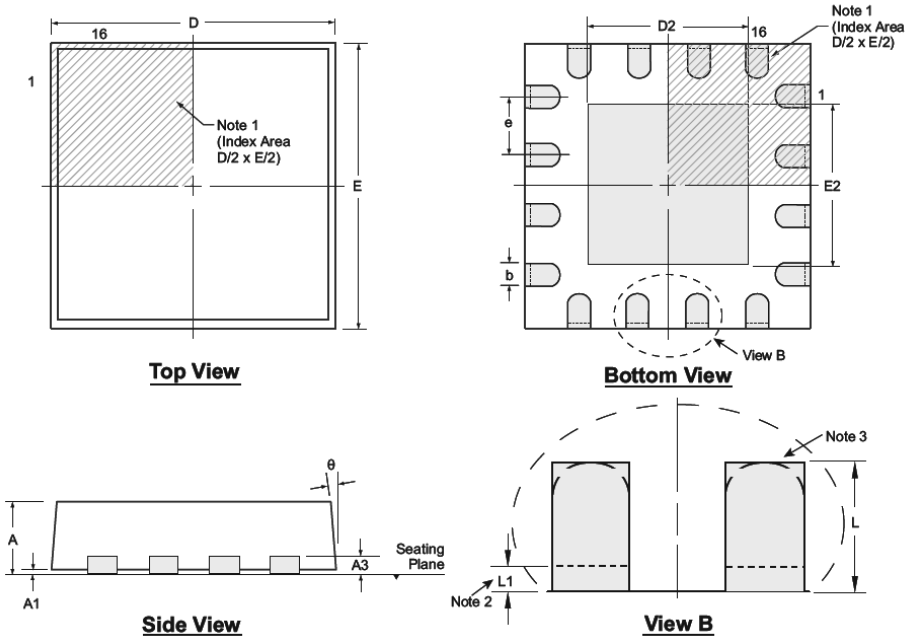

Note: For the most current package drawings, see the Microchip Packaging Specification at www.microchip.com/packaging.

Notes:

1. *A Pin 1 identifier must be located in the index area indicated. The Pin 1 identifier can be: a molded mark/identifier; an embedded metal marker; or a printed indicator.*
2. *Depending on the method of manufacturing, a maximum of 0.15mm pullback (L1) may be present.*
3. *The inner tip of the lead may be either rounded or square.*

Symbol		A	A1	A3	b	D	D2	E	E2	e	L	L1	θ
Dimension (mm)	MIN	0.80	0.00	0.20 REF	0.18	2.85*	1.50	2.85*	1.50	0.50 BSC	0.20†	0.00	0°
	NOM	0.90	0.02		0.25	3.00	1.65	3.00	1.65		0.30†	-	-
	MAX	1.00	0.05		0.30	3.15*	1.80	3.15*	1.80		0.45	0.15	14°

JEDEC Registration MO-220, Variation VEED-4, Issue K, June 2006.
** This dimension is not specified in the JEDEC drawing.*
† This dimension differs from the JEDEC drawing.
Drawings not to scale.

© 2017 Microchip Technology Inc.

APPENDIX A: REVISION HISTORY

Revision A (May 2017)

- Converted Supertex Doc# DSFP-MD1820 to Microchip DS20005767A
- Changed the package marking format
- Changed the quantity of the K6 package from 3000/Reel to 3300/Reel
- Made minor text changes throughout the document

PRODUCT IDENTIFICATION SYSTEM

To order or obtain information, e.g., on pricing or delivery, contact your local Microchip representative or sales office.

PART NO.	XX	-	X	-	X
Device	Package Options		Environmental		Media Type

Device:	MD1820	=	High-Speed 4-Channel MOSFET Driver with Non-Inverting Outputs
Package:	K6	=	16-lead QFN
Environmental:	G	=	Lead (Pb)-free/RoHS-compliant Package
Media Type:	(blank)	=	3300/Reel for a K6 Package

Example:

a) MD1820K6-G: High-Speed 4-Channel MOSFET Driver with Non-Inverting Outputs, 16-lead QFN, 3300/Reel

© 2017 Microchip Technology Inc.

Note the following details of the code protection feature on Microchip devices:

- Microchip products meet the specification contained in their particular Microchip Data Sheet.
- Microchip believes that its family of products is one of the most secure families of its kind on the market today, when used in the intended manner and under normal conditions.
- There are dishonest and possibly illegal methods used to breach the code protection feature. All of these methods, to our knowledge, require using the Microchip products in a manner outside the operating specifications contained in Microchip's Data Sheets. Most likely, the person doing so is engaged in theft of intellectual property.
- Microchip is willing to work with the customer who is concerned about the integrity of their code.
- Neither Microchip nor any other semiconductor manufacturer can guarantee the security of their code. Code protection does not mean that we are guaranteeing the product as "unbreakable."

Code protection is constantly evolving. We at Microchip are committed to continuously improving the code protection features of our products. Attempts to break Microchip's code protection feature may be a violation of the Digital Millennium Copyright Act. If such acts allow unauthorized access to your software or other copyrighted work, you may have a right to sue for relief under that Act.

Information contained in this publication regarding device applications and the like is provided only for your convenience and may be superseded by updates. It is your responsibility to ensure that your application meets with your specifications. MICROCHIP MAKES NO REPRESENTATIONS OR WARRANTIES OF ANY KIND WHETHER EXPRESS OR IMPLIED, WRITTEN OR ORAL, STATUTORY OR OTHERWISE, RELATED TO THE INFORMATION, INCLUDING BUT NOT LIMITED TO ITS CONDITION, QUALITY, PERFORMANCE, MERCHANTABILITY OR FITNESS FOR PURPOSE**.** Microchip disclaims all liability arising from this information and its use. Use of Microchip devices in life support and/or safety applications is entirely at the buyer's risk, and the buyer agrees to defend, indemnify and hold harmless Microchip from any and all damages, claims, suits, or expenses resulting from such use. No licenses are conveyed, implicitly or otherwise, under any Microchip intellectual property rights unless otherwise stated.

Microchip received ISO/TS-16949:2009 certification for its worldwide headquarters, design and wafer fabrication facilities in Chandler and Tempe, Arizona; Gresham, Oregon and design centers in California and India. The Company's quality system processes and procedures are for its PIC® MCUs and dsPIC® DSCs, KEELOQ® code hopping devices, Serial EEPROMs, microperipherals, nonvolatile memory and analog products. In addition, Microchip's quality system for the design and manufacture of development systems is ISO 9001:2000 certified.

QUALITY MANAGEMENT SYSTEM
CERTIFIED BY DNV
═ ISO/TS 16949 ═

Trademarks

The Microchip name and logo, the Microchip logo, AnyRate, AVR, AVR logo, AVR Freaks, BeaconThings, BitCloud, CryptoMemory, CryptoRF, dsPIC, FlashFlex, flexPWR, Heldo, JukeBlox, KEELOQ, KEELOQ logo, Kleer, LANCheck, LINK MD, maXStylus, maXTouch, MediaLB, megaAVR, MOST, MOST logo, MPLAB, OptoLyzer, PIC, picoPower, PICSTART, PIC32 logo, Prochip Designer, QTouch, RightTouch, SAM-BA, SpyNIC, SST, SST Logo, SuperFlash, tinyAVR, UNI/O, and XMEGA are registered trademarks of Microchip Technology Incorporated in the U.S.A. and other countries.

ClockWorks, The Embedded Control Solutions Company, EtherSynch, Hyper Speed Control, HyperLight Load, IntelliMOS, mTouch, Precision Edge, and Quiet-Wire are registered trademarks of Microchip Technology Incorporated in the U.S.A.

Adjacent Key Suppression, AKS, Analog-for-the-Digital Age, Any Capacitor, AnyIn, AnyOut, BodyCom, chipKIT, chipKIT logo, CodeGuard, CryptoAuthentication, CryptoCompanion, CryptoController, dsPICDEM, dsPICDEM.net, Dynamic Average Matching, DAM, ECAN, EtherGREEN, In-Circuit Serial Programming, ICSP, Inter-Chip Connectivity, JitterBlocker, KleerNet, KleerNet logo, Mindi, MiWi, motorBench, MPASM, MPF, MPLAB Certified logo, MPLIB, MPLINK, MultiTRAK, NetDetach, Omniscient Code Generation, PICDEM, PICDEM.net, PICkit, PICtail, PureSilicon, QMatrix, RightTouch logo, REAL ICE, Ripple Blocker, SAM-ICE, Serial Quad I/O, SMART-I.S., SQI, SuperSwitcher, SuperSwitcher II, Total Endurance, TSHARC, USBCheck, VariSense, ViewSpan, WiperLock, Wireless DNA, and ZENA are trademarks of Microchip Technology Incorporated in the U.S.A. and other countries.

SQTP is a service mark of Microchip Technology Incorporated in the U.S.A.

Silicon Storage Technology is a registered trademark of Microchip Technology Inc. in other countries.

GestIC is a registered trademark of Microchip Technology Germany II GmbH & Co. KG, a subsidiary of Microchip Technology Inc., in other countries.

All other trademarks mentioned herein are property of their respective companies.

© 2017, Microchip Technology Incorporated, All Rights Reserved.

ISBN: 978-1-5224-1748-4

Worldwide Sales and Service

AMERICAS

Corporate Office
2355 West Chandler Blvd.
Chandler, AZ 85224-6199
Tel: 480-792-7200
Fax: 480-792-7277
Technical Support:
http://www.microchip.com/support
Web Address:
www.microchip.com

Atlanta
Duluth, GA
Tel: 678-957-9614
Fax: 678-957-1455

Austin, TX
Tel: 512-257-3370

Boston
Westborough, MA
Tel: 774-760-0087
Fax: 774-760-0088

Chicago
Itasca, IL
Tel: 630-285-0071
Fax: 630-285-0075

Dallas
Addison, TX
Tel: 972-818-7423
Fax: 972-818-2924

Detroit
Novi, MI
Tel: 248-848-4000

Houston, TX
Tel: 281-894-5983

Indianapolis
Noblesville, IN
Tel: 317-773-8323
Fax: 317-773-5453
Tel: 317-536-2380

Los Angeles
Mission Viejo, CA
Tel: 949-462-9523
Fax: 949-462-9608
Tel: 951-273-7800

Raleigh, NC
Tel: 919-844-7510

New York, NY
Tel: 631-435-6000

San Jose, CA
Tel: 408-735-9110
Tel: 408-436-4270

Canada - Toronto
Tel: 905-695-1980
Fax: 905-695-2078

ASIA/PACIFIC

Asia Pacific Office
Suites 3707-14, 37th Floor
Tower 6, The Gateway
Harbour City, Kowloon

Hong Kong
Tel: 852-2943-5100
Fax: 852-2401-3431

Australia - Sydney
Tel: 61-2-9868-6733
Fax: 61-2-9868-6755

China - Beijing
Tel: 86-10-8569-7000
Fax: 86-10-8528-2104

China - Chengdu
Tel: 86-28-8665-5511
Fax: 86-28-8665-7889

China - Chongqing
Tel: 86-23-8980-9588
Fax: 86-23-8980-9500

China - Dongguan
Tel: 86-769-8702-9880

China - Guangzhou
Tel: 86-20-8755-8029

China - Hangzhou
Tel: 86-571-8792-8115
Fax: 86-571-8792-8116

China - Hong Kong SAR
Tel: 852-2943-5100
Fax: 852-2401-3431

China - Nanjing
Tel: 86-25-8473-2460
Fax: 86-25-8473-2470

China - Qingdao
Tel: 86-532-8502-7355
Fax: 86-532-8502-7205

China - Shanghai
Tel: 86-21-3326-8000
Fax: 86-21-3326-8021

China - Shenyang
Tel: 86-24-2334-2829
Fax: 86-24-2334-2393

China - Shenzhen
Tel: 86-755-8864-2200
Fax: 86-755-8203-1760

China - Wuhan
Tel: 86-27-5980-5300
Fax: 86-27-5980-5118

China - Xian
Tel: 86-29-8833-7252
Fax: 86-29-8833-7256

ASIA/PACIFIC

China - Xiamen
Tel: 86-592-2388138
Fax: 86-592-2388130

China - Zhuhai
Tel: 86-756-3210040
Fax: 86-756-3210049

India - Bangalore
Tel: 91-80-3090-4444
Fax: 91-80-3090-4123

India - New Delhi
Tel: 91-11-4160-8631
Fax: 91-11-4160-8632

India - Pune
Tel: 91-20-3019-1500

Japan - Osaka
Tel: 81-6-6152-7160
Fax: 81-6-6152-9310

Japan - Tokyo
Tel: 81-3-6880- 3770
Fax: 81-3-6880-3771

Korea - Daegu
Tel: 82-53-744-4301
Fax: 82-53-744-4302

Korea - Seoul
Tel: 82-2-554-7200
Fax: 82-2-558-5932 or
82-2-558-5934

Malaysia - Kuala Lumpur
Tel: 60-3-6201-9857
Fax: 60-3-6201-9859

Malaysia - Penang
Tel: 60-4-227-8870
Fax: 60-4-227-4068

Philippines - Manila
Tel: 63-2-634-9065
Fax: 63-2-634-9069

Singapore
Tel: 65-6334-8870
Fax: 65-6334-8850

Taiwan - Hsin Chu
Tel: 886-3-5778-366
Fax: 886-3-5770-955

Taiwan - Kaohsiung
Tel: 886-7-213-7830

Taiwan - Taipei
Tel: 886-2-2508-8600
Fax: 886-2-2508-0102

Thailand - Bangkok
Tel: 66-2-694-1351
Fax: 66-2-694-1350

EUROPE

Austria - Wels
Tel: 43-7242-2244-39
Fax: 43-7242-2244-393

Denmark - Copenhagen
Tel: 45-4450-2828
Fax: 45-4485-2829

Finland - Espoo
Tel: 358-9-4520-820

France - Paris
Tel: 33-1-69-53-63-20
Fax: 33-1-69-30-90-79

France - Saint Cloud
Tel: 33-1-30-60-70-00

Germany - Garching
Tel: 49-8931-9700

Germany - Haan
Tel: 49-2129-3766400

Germany - Heilbronn
Tel: 49-7131-67-3636

Germany - Karlsruhe
Tel: 49-721-625370

Germany - Munich
Tel: 49-89-627-144-0
Fax: 49-89-627-144-44

Germany - Rosenheim
Tel: 49-8031-354-560

Israel - Ra'anana
Tel: 972-9-744-7705

Italy - Milan
Tel: 39-0331-742611
Fax: 39-0331-466781

Italy - Padova
Tel: 39-049-7625286

Netherlands - Drunen
Tel: 31-416-690399
Fax: 31-416-690340

Norway - Trondheim
Tel: 47-7289-7561

Poland - Warsaw
Tel: 48-22-3325737

Romania - Bucharest
Tel: 40-21-407-87-50

Spain - Madrid
Tel: 34-91-708-08-90
Fax: 34-91-708-08-91

Sweden - Gothenberg
Tel: 46-31-704-60-40

Sweden - Stockholm
Tel: 46-8-5090-4654

UK - Wokingham
Tel: 44-118-921-5800
Fax: 44-118-921-5820

© 2017 Microchip Technology Inc.