High Speed, Integrated Ultrasound Driver IC

Features

- Drives two ultrasound transducer channels
- Generates five-level waveform
- Drives 12 high voltage MOSFETs
- ±2.0A source and sink peak current
- Up to 20MHz output frequency
- 12V/ns slew rate
- ±3.0ns matched delay times
- Second harmonic is less than -40dB
- Two separate gate drive voltages
- 1.8 to 3.3V CMOS logic interface

Applications

- Medical ultrasound imaging
- Piezoelectric transducer drivers
- Non-Destructive Testing (NDT)
- Metal flaw detection
- Sonar transmitter

General Description

The Supertex MD1712 is a two-channel, five-level, high voltage and high speed transmitter driver IC. It is designed for medical ultrasound imaging applications, but can also be used for metal flaw detection, Non-Destructive Testing (NDT), and for driving piezoelectric transducers.

The MD1712 is a two-channel logic controller circuit with low impedance MOSFET gate drivers. There are two sets of control logic inputs, one for channel A and one for channel B. Each channel consists of three pairs of MOSFET gate drivers. These drivers are designed to match the drive requirements of the Supertex TC6320. The MD1712 drives six TC6320s. Each pair consists of an N-channel and a P-channel MOSFET. They are designed to have the same impedance and can provide peak currents of over 2.0 amps.

Typical Application Circuit

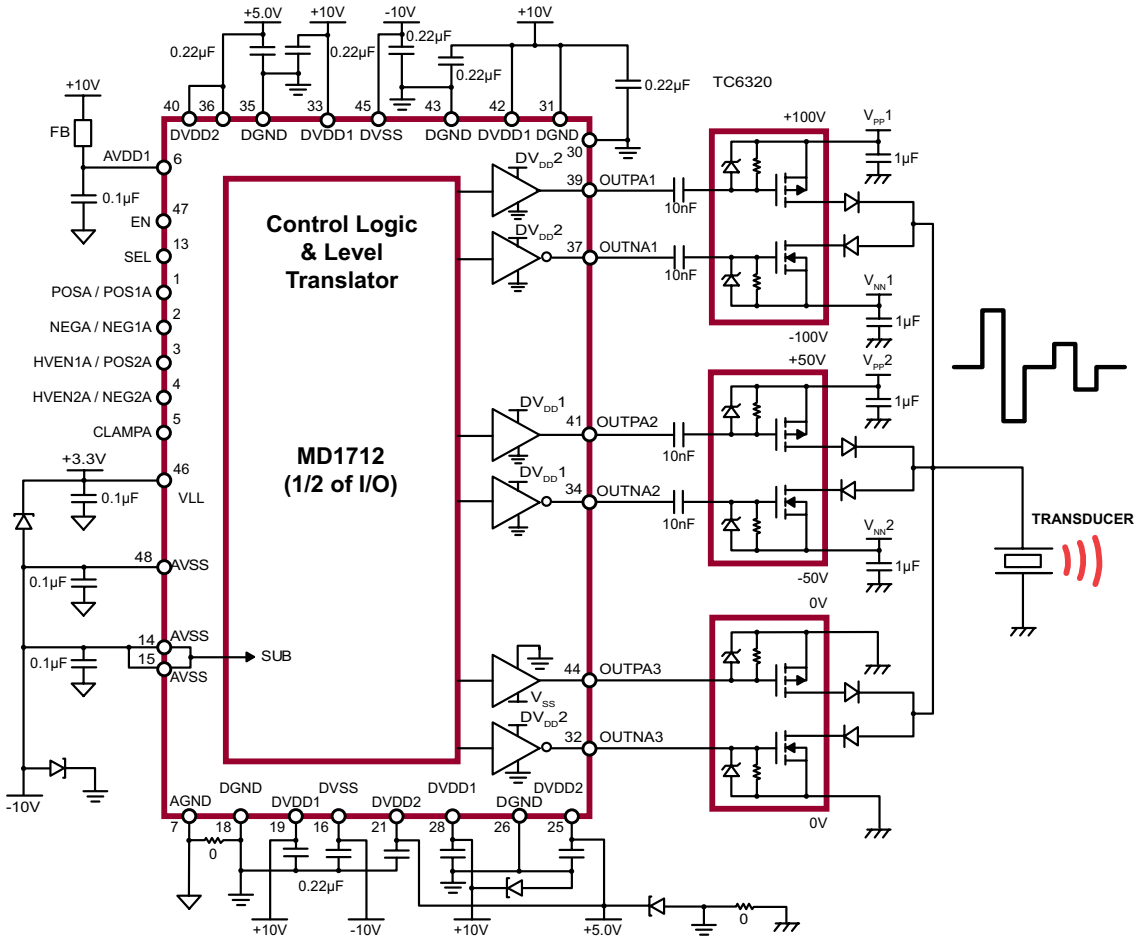

Ordering Information

Device	Package Options	
	48-Lead LQFP *7.00x7.00mm body* *1.60mm height (max)* *0.50mm pitch*	48-Lead QFN *7.00x7.00mm body* *1.00mm height (max)* *0.50mm pitch*
MD1712	MD1712FG-G	MD1712K6-G

-G indicates package is RoHS compliant ('Green')

Pin Configurations

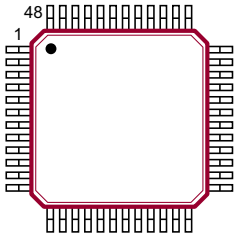

48-Lead LQFP (FG)
(top view)

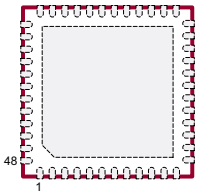

48-Lead QFN (K6)
(top view)

Package Marking

Top Marking



Bottom Marking



YY = Year Sealed
WW = Week Sealed
L = Lot Number
C = Country of Origin*
A = Assembler ID*
_____ = "Green" Packaging

**May be part of top marking*

Package may or may not include the following marks: Si or

48-Lead LQFP (FG)



L = Lot Number
YY = Year Sealed
WW = Week Sealed
A = Assembler ID
C = Country of Origin
____ = "Green" Packaging

Package may or may not include the following marks: Si or

48-Lead QFN (K6)

Absolute Maximum Ratings

Parameter	Value
V_{LL} logic supply voltage	-0.5V to +5.5V
$AV_{DD}1$, $DV_{DD}1$, positive gate drive supply	-0.5V to +15V
$DV_{DD}2$, positive gate drive supply	-0.5V to +15V
AV_{SS}, DV_{SS}, negative gate drive supply	-15V to +0.5V
Thermal resistance (θ_{JA}): 48-Lead LQFP* 48-Lead QFN*	 50°C/W 29°C/W
Maximum junction temperature	+125C
Storage temperature	-65°C to 150°C
Power dissipation	1.2W

Absolute Maximum Ratings are those values beyond which damage to the device may occur. Functional operation under these conditions is not implied. Continuous operation of the device at the absolute rating level may affect device reliability. All voltages are referenced to device ground.

** 1.0oz 4-layer 3x4" PCB*

Operating Supply Voltages and Currents

(Over operating conditions unless otherwise specified, $AV_{DD}1 = DV_{DD}1 = DV_{DD}2 = 10V$, $AV_{SS} = DV_{SS} = -10V$, $V_{LL} = 3.3V$, $T_A = 25°C$)

Sym	Parameter	Min	Typ	Max	Units	Conditions
V_{LL}	Logic supply	+1.8	+3.3	+5.0	V	---
AV_{DD1}	Positive drive bias supply	+8.0	+10	+12.6	V	---
DV_{DD1}	Positive gate drive supply	+4.75	-	+12.6	V	---
DV_{DD2}	Positive gate drive supply	+4.75	-	+12.6	V	---
$AV_{SS,}$ DV_{SS}	Negative gate drive and bias supply	-12.0	-10	-8.0	V	---
I_{VLL}	Logic supply current	-	2.0	-	mA	All channels on at 5.0Mhz, no load
I_{AVDD1}	Positive bias current	-	5.0	-		
I_{AVSS} & I_{DVSS}	Negative drive and bias supply current	-	20	-		
I_{DVDD1}	Positive drive current 1	-	55	-		

Operating Supply Voltages and Currents *(cont.)*

(Over operating conditions unless otherwise specified, $AV_{DD}1 = DV_{DD}1 = DV_{DD}2 = 10V$, $AV_{SS} = DV_{SS} = -10V$, $V_{LL} = 3.3V$, $T_A = 25°C$)

I_{DVDD2}	Positive drive current 2	-	13	-	mA	All channels on at 5.0Mhz, $D_{VDD}2 = 5.0$, no load
I_{AVDD1Q}	$V_{AVDD}1$ quiescent current	-	2.0	-	mA	EN = low, All inputs low or high.
I_{AVSSQ}	V_{AVSS} quiescent current	-	0.75	-	mA	
I_{DVDD1Q}	$V_{DVDD}1$ quiescent current	-	-	10	µA	
I_{DVDD2Q}	$V_{DVDD}2$ quiescent current	-	-	10	µA	
I_{VLLQ}	Logic supply current	-	1.0	-	mA	

DC Electrical Characteristics

(Over operating conditions unless otherwise specified, $AV_{DD}1 = DV_{DD}1 = DV_{DD}2 = 10V$, $AV_{SS} = DV_{SS} = -10V$, $V_{LL} = 3.3V$, $T_A = 0$ to $70°C$)

P-Channel Gate Driver Outputs

Sym	Parameter	Min	Typ	Max	Units	Conditions
R_{SINK}	Output sink resistance	-	-	6.0	Ω	I_{SINK} = 100mA
R_{SOURCE}	Output source resistance	-	-	6.0	Ω	I_{SOURCE} = 100mA
I_{SINK}	Peak output sink current	-	2.0	-	A	---
I_{SOURCE}	Peak output source current	-	2.0	-	A	---

N-Channel Gate Driver Outputs

Sym	Parameter	Min	Typ	Max	Units	Conditions
R_{SINK}	Output sink resistance	-	-	10	Ω	I_{SINK} = 100mA
R_{SOURCE}	Output source resistance	-	-	10	Ω	I_{SOURCE} = 100mA
I_{SINK}	Peak output sink current	-	1.5	-	A	---
I_{SOURCE}	Peak output source current	-	1.5	-	A	---

Logic Inputs

Sym	Parameter	Min	Typ	Max	Units	Conditions
V_{IH}	Input logic high voltage	$0.8V_{LL}$	-	V_{LL}	V	---
V_{IL}	Input logic low voltage	0	-	$0.2V_{LL}$	V	---
I_{IH}	Input logic high current	-	-	1.0	µA	---
I_{IL}	Input logic low current	-1.0	-	-	µA	---

AC Electrical Characteristics

(Over operating conditions unless otherwise specified, $AV_{DD}1 = DV_{DD}1 = DV_{DD}2 = 10V$, $AV_{SS} = DV_{SS} = -10V$, $V_{LL} = 3.3V$, $T_A = 0$ to $70°C$)

Sym	Parameter	Min	Typ	Max	Units	Conditions
f_{OUT}	Output frequency range	-	-	20	MHz	---
t_{PH}	Propagation delay when output is from low to high	-	19	-	ns	No load, see timing diagram
t_{PL}	Propagation delay when output is from high to low	-	19	-	ns	No load, see timing diagram
t_r	Output rise time	-	8.0	-	ns	1000pF load, see timing diagram
t_f	Output fall time	-	8.0	-	ns	1000pF load, see timing diagram
Δt_{DM}	Delay time matching	-	-	±3.0	ns	No load, from device to device
Δt_{DLAY}	Output jitter	-	30	-	ps	Standard deviation of t_D samples (1k)
SR	Output slew rate	-	12	-	V/ns	Measured at TC6320 output with 100Ω load
HD2	2nd harmonic distortion	-	-40	-	dB	

Power-Up Sequence

Step	Connection	Description
1	AV_{SS} , DV_{SS}	Negative gate drive supply and substrate bias
2	V_{LL}, $AV_{DD}1$, $DV_{DD}1$ & $DV_{DD}2$	Logic supply, positive gate drive supply and bias

Truth Table for Channels A and B (For SEL = L)

Logic Control Inputs							$V_{PP}1$ to $V_{NN}1$ Output		$V_{PP}2$ to $V_{NN}2$ Output		$V_{PP}3$ to $V_{NN}3$ Output	
SEL	EN	HVEN1/ POS2	HVEN2/ NEG2	Clamp	POS/ POS1	NEG/ NEG1	$HV_{OUT}P1$	$HV_{OUT}N1$	$HV_{OUT}P2$	$HV_{OUT}N2$	$HV_{OUT}P3$	$HV_{OUT}N3$
0	1	0	0	0	0	0	OFF		OFF		ON	ON
0	1	0	0	0	0	1					ON	ON
0	1	0	0	0	1	0					ON	ON
0	1	0	0	0	1	1					OFF	OFF
0	1	0	0	1	0	0	OFF		OFF		OFF	
0	1	0	0	1	0	1						
0	1	0	0	1	1	0						
0	1	0	0	1	1	1						
0	1	0	1	0	0	0	OFF		OFF	OFF	ON	ON
0	1	0	1	0	0	1			OFF	ON	OFF	OFF
0	1	0	1	0	1	0			ON	OFF	OFF	OFF
0	1	0	1	0	1	1			OFF	OFF	OFF	OFF
0	1	0	1	1	0	0	OFF		OFF		OFF	
0	1	0	1	1	0	1						
0	1	0	1	1	1	0						
0	1	0	1	1	1	1						
0	1	1	0	0	0	0	OFF	OFF	OFF		ON	ON
0	1	1	0	0	0	1	OFF	ON			OFF	OFF
0	1	1	0	0	1	0	ON	OFF			OFF	OFF
0	1	1	0	0	1	1	OFF	OFF			OFF	OFF
0	1	1	0	1	0	0	OFF		OFF		OFF	
0	1	1	0	1	0	1						
0	1	1	0	1	1	0						
0	1	1	0	1	1	1						
0	1	1	1	0	0	0	OFF		OFF		OFF	
0	1	1	1	0	0	1						
0	1	1	1	0	1	0						
0	1	1	1	0	1	1						
0	1	1	1	1	0	0	OFF		OFF		OFF	
0	1	1	1	1	0	1						
0	1	1	1	1	1	0						
0	1	1	1	1	1	1						
0	0	X	X	X	X	X	OFF		OFF		OFF	

Truth Table for Channels A and B (For SEL = H)

Logic Control Inputs							$V_{PP}1$ to $V_{NN}1$ Output		$V_{PP}2$ to $V_{NN}2$ Output		$V_{PP}3$ to $V_{NN}3$ Output	
SEL	EN	Clamp	HVEN1/ POS2	HVEN2/ NEG2	POS/ POS1	NEG/ NEG1	$HV_{OUT}P1$	$HV_{OUT}N1$	$HV_{OUT}P2$	$HV_{OUT}N2$	$HV_{OUT}P3$	$HV_{OUT}N3$
1	1	0	0	0	0	0	OFF	OFF	OFF	OFF	OFF	
1	1	0	0	0	0	1	OFF	ON				
1	1	0	0	0	1	0	ON	OFF				
1	1	0	0	0	1	1	ON	ON				
1	1	0	0	1	0	0	OFF	OFF	OFF	ON	OFF	
1	1	0	0	1	0	1	OFF	ON				
1	1	0	0	1	1	0	ON	OFF				
1	1	0	0	1	1	1	ON	ON				
1	1	0	1	0	0	0	OFF	OFF	ON	OFF	OFF	
1	1	0	1	0	0	1	OFF	ON				
1	1	0	1	0	1	0	ON	OFF				
1	1	0	1	0	1	1	ON	ON				
1	1	0	1	1	0	0	OFF	OFF	ON	ON	OFF	
1	1	0	1	1	0	1	OFF	ON				
1	1	0	1	1	1	0	ON	OFF				
1	1	0	1	1	1	1	ON	ON				
1	1	1	0	0	0	0	OFF	OFF	OFF	OFF	ON	
1	1	1	0	0	0	1	OFF	ON				
1	1	1	0	0	1	0	ON	OFF				
1	1	1	0	0	1	1	ON	ON				
1	1	1	0	1	0	0	OFF	OFF	OFF	ON	ON	
1	1	1	0	1	0	1	OFF	ON				
1	1	1	0	1	1	0	ON	OFF				
1	1	1	0	1	1	1	ON	ON				
1	1	1	1	0	0	0	OFF	OFF	ON	OFF	ON	
1	1	1	1	0	0	1	OFF	ON				
1	1	1	1	0	1	0	ON	OFF				
1	1	1	1	0	1	1	ON	ON				
1	1	1	1	1	0	0	OFF	OFF	ON	ON	ON	
1	1	1	1	1	0	1	OFF	ON				
1	1	1	1	1	1	0	ON	OFF				
1	1	1	1	1	1	1	ON	ON				
1	0	X	X	X	X	X	OFF	OFF	OFF	OFF	OFF	

Test Circuit for Channel A

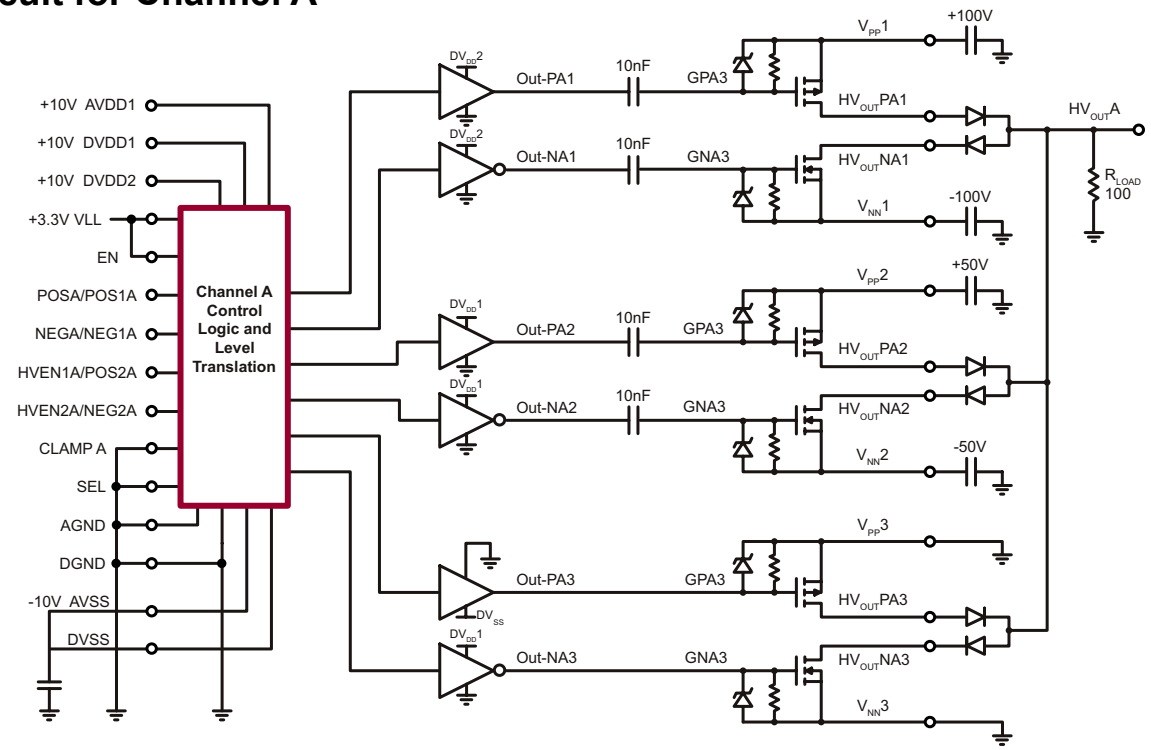

Timing Diagram

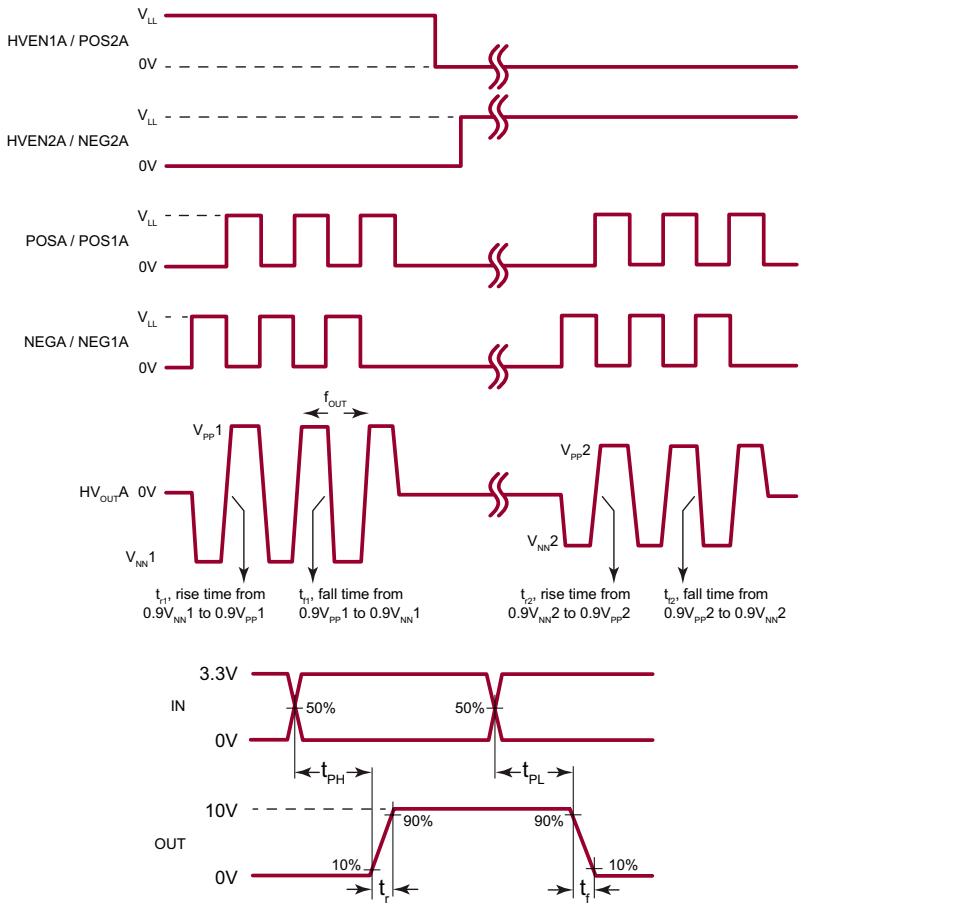

Block Diagram

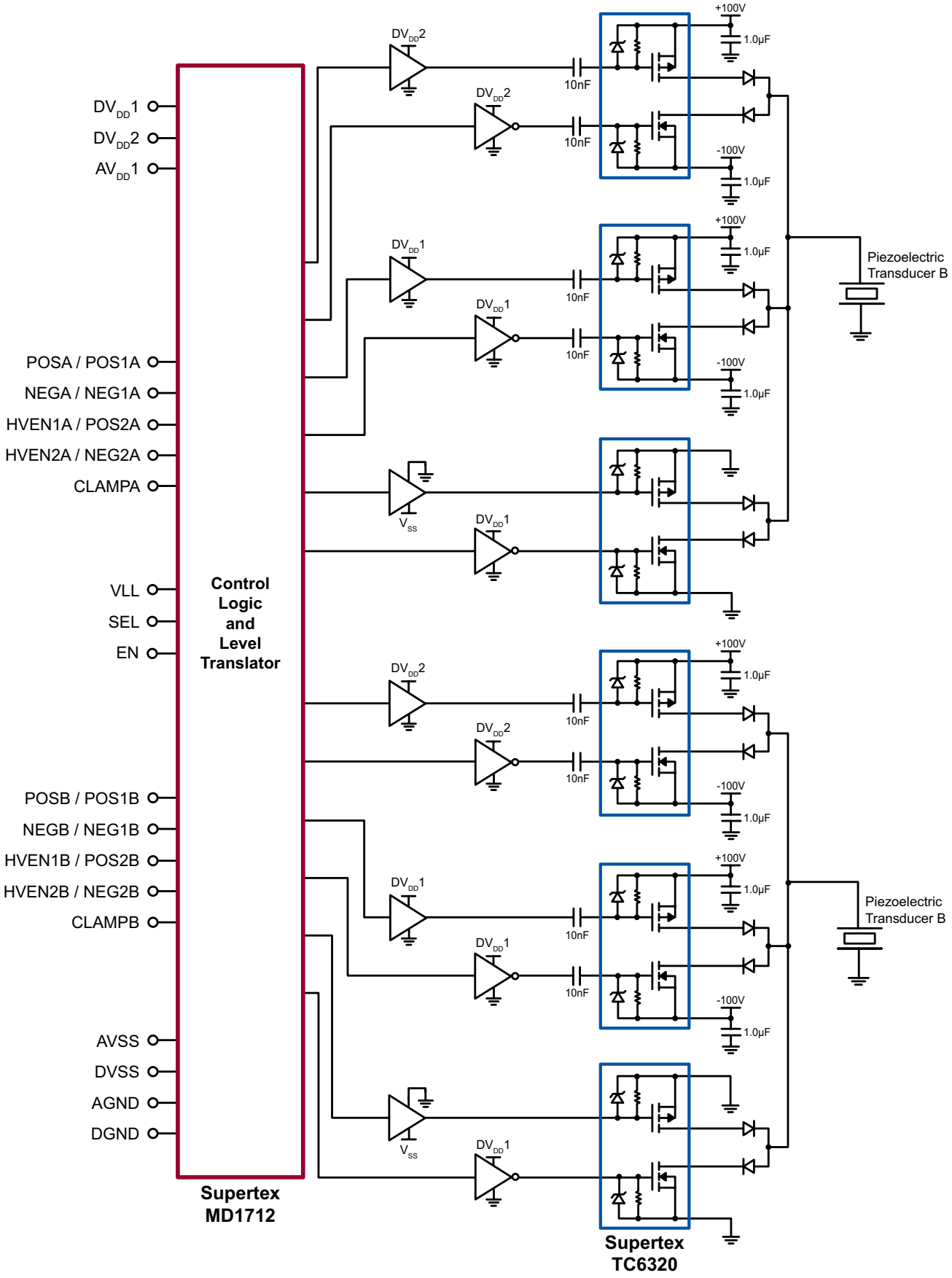

Pin Description (48-Lead LQFP & 48-Lead QFN)

Pin #	Name	Description
1	POSA / POS1A	Logic input control for channel A. When SEL = L, the pin is POSA. When SEL = H, the pin is POS1A.
2	NEGA / NEG1A	Logic input control for channel A. When SEL = L, the pin is NEGA. When SEL = H, the pin is NEG1A.
3	HVEN1A / POS2A	Logic input control for channel A. When SEL= L, the pin is HVEN1A. When SEL = H, the pin is POS2A.
4	HVEN2A / NEG2A	Logic input control for channel A. When SEL = L, the pin is HVEN2A. When SEL = H, the pin is NEG2A.
5	CLAMPA	Used with SEL = H. Logic input control for OUT-PA3 and OUT-NA3. Connect to ground when SEL = L.
6	$AV_{DD}1$	Supplies analog circuitry portion of the gate driver. Should be at the same potential as $DV_{DD}1$.
7	AGND	Analog Ground.
8	CLAMPB	Used with SEL = H. Logic input control for OUT-PB3 and OUT-NB3. Connect to ground when SEL = L.
9	HVEN2B / NEG2B	Logic input control for channel B. When SEL = L, the pin is HVEN2B. When SEL = H, the pin is NEG2B.
10	HVEN1B / POS2B	Logic input control for channel B. When SEL = L, the pin is HVEN1B. When SEL = H, the pin is POS2B.
11	NEGB / NEG1B	Logic input control for channel B. When SEL = L, the pin is NEGB. When SEL = H, the pin is NEG1B.
12	POSB / POS1B	Logic input control for channel B. When SEL = L, the pin is POSB. When SEL = H, the pin is POS1B.
13	SEL	Logic input select. See truth tables for SEL = L and SEL = H.
14	AVSS	Negative driver supply for OUT-PA3, OUT-PB3 and bias circuits. They are also connected to the IC substrate. They are required to connect to the most negative potential of voltage supplies.
15		
16	DVSS	Gate drive supply voltage for OUT-PA3 and OUT-PB3. Supplies digital circuitry portion and the main Output stage. Should be at the same potential as AVSS.
17	OUT-PB3	Output P-Channel gate driver for channel B
18	DGND	Digital Ground.
19	$DV_{DD}1$	Gate drive supply voltage. Supplies digital circuitry portion of the gate driver and the main output stage for OUT-PA2, OUT-NA2, OUT-NA3, OUT-PB2, OUT-NB2, and OUT-NB3. hould be at the same potential as $AV_{DD}1$.
20	OUT-PB2	Output P-Channel gate driver for channel B
21	$DV_{DD}2$	Gate drive supply voltage. Supplies digital circuitry portion of the gate driver and the main output stage for OUT-PA1, OUT-NA1, OUT-PB1, and OUT-NB1. Can be at a different potential than $DV_{DD}1$.
22	OUT-PB1	Output P-Channel gate driver for channel B
23	N/C	No connect.
24	OUT-NB1	Output N-Channel gate driver for channel B
25	$DV_{DD}2$	Gate drive supply voltage. Supplies digital circuitry portion of the gate driver and the main output stage for OUT-PA1, OUT-NA1, OUT-PB1, and OUT-NB1. Can be at a different potential than $DV_{DD}1$.

Pin Description (48-Lead LQFP & 48-Lead QFN) *(cont.)*

Pin #	Name	Description
26	DGND	Digital Ground.
27	OUT-NB2	Output N-Channel gate driver for channel B
28	$DV_{DD}1$	Gate drive supply voltage. Supplies digital circuitry portion of the gate driver and the main output stage for OUT-PA2, OUT-NA2, OUT-NA3, OUT-PB2, OUT-NB2, and OUT-NB3. Should be at the same potential as $AV_{DD}1$.
29	OUT-NB3	Output N-Channel gate driver for channel B
30	DGND	Digital Ground.
31	$DV_{DD}1$	Gate drive supply voltage. Supplies digital circuitry portion of the gate driver and the main output stage for OUT-PA2, OUT-NA2, OUT-NA3, OUT-PB2, OUT-NB2, and OUT-NB3. Should be at the same potential as $AV_{DD}1$.
32	OUT-NA3	Output N-Channel gate drivers for channel A.
33	$DV_{DD}1$	Gate drive supply voltage. Supplies digital circuitry portion of the gate driver and the main output stage for OUT-PA2, OUT-NA2, OUT-NA3, OUT-PB2, OUT-NB2, and OUT-NB3. Should be at the same potential as $AV_{DD}1$.
34	OUT-NA2	Output N-Channel gate drivers for channel A.
35	DGND	Digital Ground.
36	$DV_{DD}2$	Gate drive supply voltage. Supplies digital circuitry portion of the gate driver and the main output stage for OUT-PA1, OUT-NA1, OUT-PB1, and OUT-NB1. Can be at a different potential than $DV_{DD}1$.
37	OUT-NA1	Output N-Channel gate drivers for channel A.
38	N/C	No connect.
39	OUT-PA1	Output P-Channel gate drivers for channel A
40	$DV_{DD}2$	Gate drive supply voltage. Supplies digital circuitry portion of the gate driver and the main output stage for OUT-PA1, OUT-NA1, OUT-PB1, and OUT-NB1. Can be at a different potential than $DV_{DD}1$.
41	OUT-PA2	Output P-Channel gate drivers for channel A
42	$DV_{DD}1$	Gate drive supply voltage. Supplies digital circuitry portion of the gate driver and the main output stage for OUT-PA2, OUT-NA2, OUT-NA3, OUT-PB2, OUT-NB2, and OUT-NB3. Should be at the same potential as $AV_{DD}1$.
43	DGND	Digital Ground.
44	OUT-PA3	Output P-Channel gate drivers for channel A
45	DVSS	Gate drive supply voltage for OUT-PA3 and OUT-PB3. Supplies digital circuitry portion and the main output stage. Should be at the same potential as AVSS.
46	VLL	Logic supply voltage.
47	EN	Logic input enable control. When EN = L, all P-channel output drivers are high and all N-channel output drivers are low.
48	AVSS	Negative driver supply for OUT-PA3, OUT-PB3 and bias circuits. They are also connected to the IC substrate. They are required to connect to the most negative potential of voltage supplies.
Center Pad	AVSS	For the QFN package, the center pad is at AVSS potential. It should be externally connected to AVSS.

48-Lead LQFP Package Outline (FG)

7.00x7.00mm body, 1.60mm height (max), 0.50mm pitch

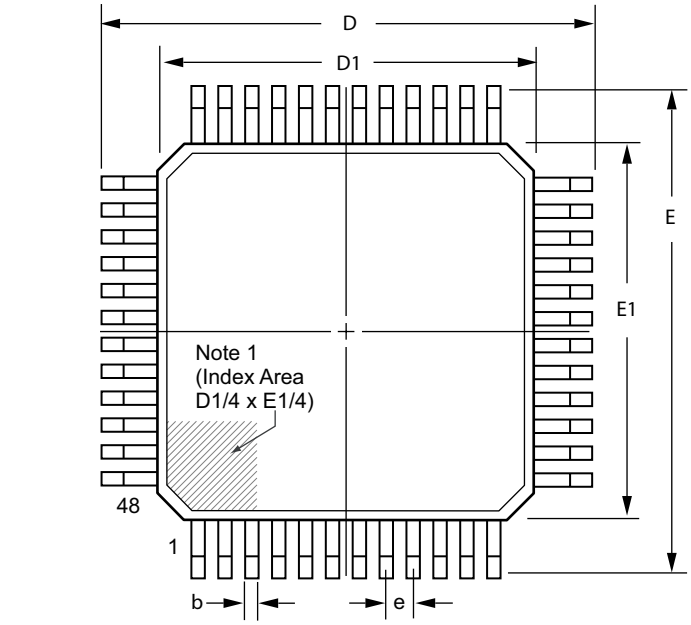

Top View

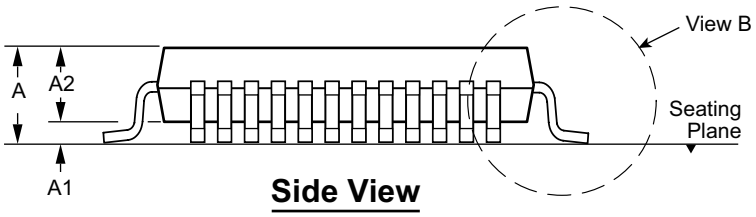

Side View

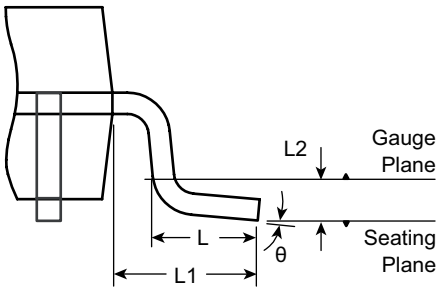

View B

Note:

1. *A Pin 1 identifier must be located in the index area indicated. The Pin 1 identifier can be: a molded mark/identifier; an embedded metal marker; or a printed indicator.*

Symbol		A	A1	A2	b	D	D1	E	E1	e	L	L1	L2	θ
Dimension (mm)	MIN	1.40*	0.05	1.35	0.17	8.80*	6.80*	8.80*	6.80*	0.50 BSC	0.45	1.00 REF	0.25 BSC	0°
	NOM	-	-	1.40	0.22	9.00	7.00	9.00	7.00		0.60			3.5°
	MAX	1.60	0.15	1.45	0.27	9.20*	7.20*	9.20*	7.20*		0.75			7°

JEDEC Registration MS-026, Variation BBC, Issue D, Jan. 2001.

** This dimension is not specified in the JEDEC drawing.*

Drawings are not to scale.

Supertex Doc. #: *DSPD-48LQFPFG Version, D041309.*

48-Lead QFN Package Outline (K6)

7.00x7.00mm body, 1.00mm height (max), 0.50mm pitch

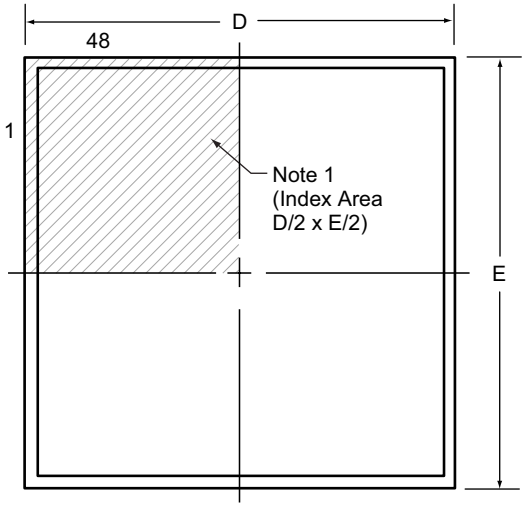

Top View

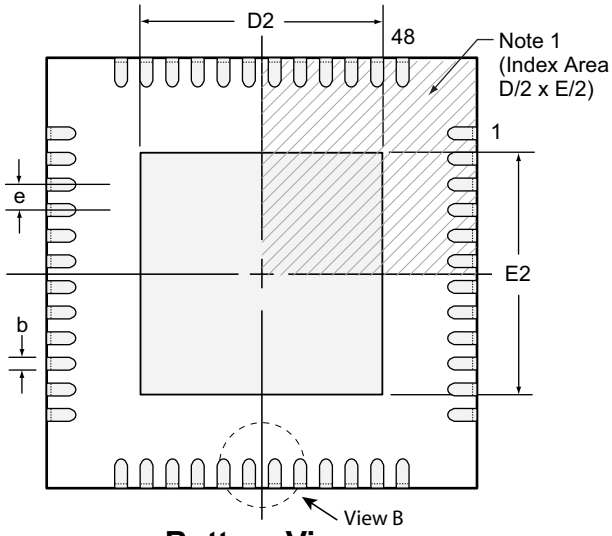

Bottom View

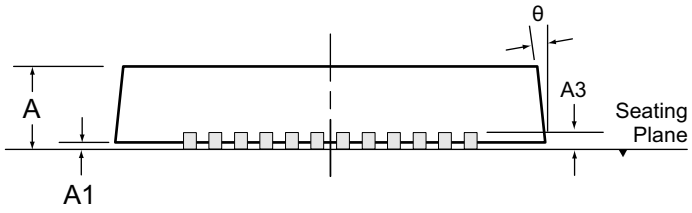

Side View

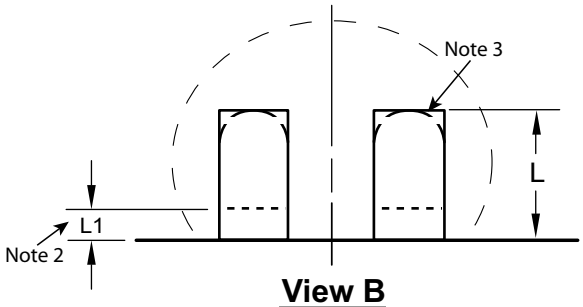

View B

Notes:

1. *A Pin 1 identifier must be located in the index area indicated. The Pin 1 identifier can be: a molded mark/identifier; an embedded metal marker; or a printed indicator.*
2. *Depending on the method of manufacturing, a maximum of 0.15mm pullback (L1) may be present.*
3. *The inner tip of the lead may be either rounded or square.*

Symbol		A	A1	A3	b	D	D2	E	E2	e	L	L1	θ
Dimension (mm)	MIN	0.80	0.00	0.20 REF	0.18	6.85*	1.25	6.85*	1.25	0.50 BSC	0.30†	0.00	0°
	NOM	0.90	0.02		0.25	7.00	-	7.00	-		0.40†	-	-
	MAX	1.00	0.05		0.30	7.15*	5.45	7.15*	5.45		0.50†	0.15	14°

JEDEC Registration MO-220, Variation VKKD-6, Issue K, June 2006.
** This dimension is not specified in the JEDEC drawing.*
† This dimension differs from the JEDEC drawing.
Drawings are not to scale.
Supertex Doc.#: *DSPD-48QFNK67X7P050, Version C041009.*

(The package drawing(s) in this data sheet may not reflect the most current specifications. For the latest package outline information go to http://www.supertex.com/packaging.html.)

Supertex inc. does not recommend the use of its products in life support applications, and will not knowingly sell them for use in such applications unless it receives an adequate "product liability indemnification insurance agreement." **Supertex inc.** does not assume responsibility for use of devices described, and limits its liability to the replacement of the devices determined defective due to workmanship. No responsibility is assumed for possible omissions and inaccuracies. Circuitry and specifications are subject to change without notice. For the latest product specifications refer to the **Supertex inc.** (website: http//www.supertex.com)

©2012 **Supertex inc.** All rights reserved. Unauthorized use or reproduction is prohibited.

Supertex inc.
1235 Bordeaux Drive, Sunnyvale, CA 94089
Tel: 408-222-8888
www.supertex.com