Metal Switch Medium Stroke, Switching Voltage up to 36 VDC



MCS ES 18

See below:
Approvals and Compliances

Description

- Vandal-proof momentary switch with a diameter of 18 mm
- Assembly by mounting with nut
- Clip for Pins

Characteristics

- Housing and actuator material: high-quality stainless steel
- Rugged design, protection against vandalism
- For use in harsh environments, both indoors and outdoors (see technical data)

Weblinks

html-datasheet, General Product Information, CAD-Drawings, Product News, Detailed request for product

Technical Data

Electrical Data	
Contact Material Silver	
Switching Voltage	min. 3 VAC/VDC
	max. 36 VDC / 220 VAC
Switching Current	min. 5 mA AC/DC
	max. 2 A DC / 0.5 A AC
Rated Switching Capacity	72 W (DC) , 110 W (AC)
Lifetime	200'000 actuations (36 VDC)
	50'000 actuations (220 VAC)
Contact Resistance	< 50 mΩ
Insulation Resistance	> 1'000 MΩ
Duration of Bounce	< 10 ms

Mechanical Data	
Actuating Force	4 N
Actuating Travel	1.8 mm,
Lifetime	1 million actuations
Shock Protection	IK 09
Tightening Torque	0.8 Nm
Climatical Data	
Operating Temperature	-20 to +55 °C
Storage Temperature	-20 to +55 °C
IP-Protection	IP 65 from front side, ,
Material	
Contact Material	Ag
Housings	Stainless Steel
Actuator unlettered	Stainless Steel

Approvals and Compliances

Detailed information on product approvals, code requirements, usage instructions and detailed test conditions can be looked up in Details about Approvals

Product standards

Product standards that are referenced

Organization	Design	Standard	Description
DIN	Designed according to	EN 50102	Switches for appliances. Part 1. General requirements

Application standards

Application standards where the product can be used

Organization	Design	Standard	Description
IEC	Designed for applications acc.	IEC/UL 60950	IEC 60950-1 includes the basic requirements for the safety of information technology equipment.

Compliances

The product complies with following Guide Lines

Identification	Details	Initiator	Description
RoHS	RoHS	SCHURTER AG	EU Directive RoHS 2011/65/EU
REACH	REACH	SCHURTER AG	On 1 June 2007, Regulation (EC) No 1907/2006 on the Registration, Evaluation, Authorization and Restriction of Chemicals 1 (abbreviated as "REACH") entered into force.

Dimension [mm]

MCS ES 18

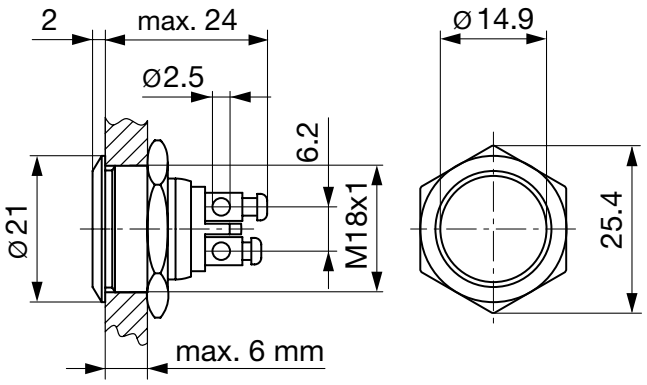

Dimension

MCS ES 18

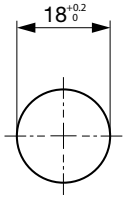

Drilling diagram

Diagrams

MCS ES 18

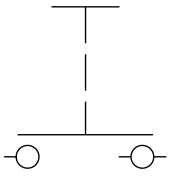

All Variants

Switching Current	Switching Voltage	Contact Material	Shock Protection	Torsion Protection	IP Protection Class Front Side	Config. Code	Order Number
[A]	[VAC/ VDC]						
2 A DC	36 VDC	Ag	IK 09	no	IP 65	MCS ES 18	1301.9560

Nut with gasket are enclosed in the box.

Most Popular.

Availability for all products can be searched real-time:https://www.schurter.com/en/Stock-Check/Stock-Check-SCHURTER

Packaging unit	40 in cardboard box



- Actuating elements in ESD safe packaging
- Screw nuts and sealing rings in a bag (enclosd in the box)
- Micro switches (enclosed in the box)

28.08.2018

The specifications, descriptions and illustrations indicated in this document are based on current information. All content is subject to modifications and amendments. Information furnished is believed to be accurate and reliable. However, users should independently evaluate the suitability and test each product selected for their own applications.